South Maui Community Park Recreation Center

Liloa Drive, Kihei, Maui, Hawaii
Lot 3, TMK Number: (2) 2-2-02 : 42

PROJECT DIRECTORY

Owner: Maui County Parks & Recreation
700 Halia Nakoa St.
Wailuku, HI 96793
(808) 270-7981
jay.koch@co.maui.hi.us
Contact: Jay Koch, P.E.

Architect: Nishikawa Architects, Inc.
2145 Wells Street, Suite 301
Wailuku, Hawaii 96793
(808) 242-6900
nai@adcmaui.com
Contact: Durwin Kiyabu, AIA

Civil Engineer: Warren S. Unemori Engineering Inc.
2145 Wells Street, Suite 403
Wailuku, HI 96793
(808) 242-4403
bwright@wsue.com
Contact: Bradford Wright

Landscape Architect: Hawaii Land Design, LLC
2331 W Main Street
Wailuku, HI 96793
(808) 249-2803
bmitchell@hawaiilanddesign.com
Contact: Bill Mitchell

Structural Engineer: Iwamoto & Associates, LLC.
98-029 Hekaha Street, Suite, 37
Aiea, Hawaii 96701
(808) 486-5202
eric@iwamotollc.com
Contact: Eric Tomishima, P.E.

Mechanical Engineer: Engineering Dynamics Corp
900 Eha Street, Suite 201
Wailuku, HI 96793
(808) 242-1644
doggomes@gmail.com
Contact: Douglas Gomes

Electrical Engineer: ECM, Inc
130 N. Market Street
Wailuku, HI 96793
(808) 242-8070
jeral@ecm-maui.com
Contact: Jeral Fukuda

Symbol	Description
X / X-X	Detail Reference *Detail Number (Typ.)* *Sheet Number (Typ.)*
X / X-X	Elevation Reference
X / X-X	Section Reference
KITCHEN / CER. TILE / 10'-6"	Room Name/Code *Room Name* *Floor Material* *Typical Ceiling Height*
	Datum Point or Elevation Height

BUILDING INFORMATION

Lot Number:		**Building Code:**	2006 IBC with Maui County Amendments
Street Address:	Liloa Drive	**Energy Code:**	2006 IECC with Maui County Amendments
TMK Number:	(2) 2-2-02 : 42		
Lot Area:	44.83 Acres	**Wind Exposure:**	C
Zoning:	PD-K/5PK	**Effective Wind Speed:**	115 MPH
State Land Use:			
Const. Type:	II-B		
Occupancy:	A-3, A-4, B		
Setbacks:			

ABBREVIATIONS

ABBR.	Abbreviation						
ACOUS.	Acoustical	DN.	Down	HT.	Height	SIM.	Similar
ADJ.	Adjust	DR.	Door	H.C.	Hollow Core	S.S.	Stainless Steel
ALUM.	Aluminum	D.S.	Double Swing	HGR.	Hanger	T&G.	Tongue and Groove
ANOD.	Anodized	EA.	Each	INST.	Installed	T.B.	Towel Bar
BARR.	Barrier	E.P.B.	Electrical Panel Box	INSUL.	Insulation	THK.	Thick
BD.	Board	E.J.	Expansion Joint	INT.	Interior	T.O.W.	Top of Wall
BM.	Beam	EQ.	Equal	L.T.	Lavatory Tray	T.P.	Toilet Paper Holder
C.B.	Catch Basin	EXIST.	Existing	MAX.	Maximum	T.R.	Towel Ring
CER.	Ceramic	F.D.	Floor Drain	M.C.	Medicine Cabinet	TYP.	Typical
CLG.	Ceiling	FDN.	Foundation	MECH.	Mechanical	U.O.N.	Unless Otherwise Noted
CLOS.	Closet	FIN. FLR.	Finish Floor	MIN.	Minimum	W/	With
CLR.	Clear	FLUOR.	Fluorescent	MTL.	Metal	W	Washer/Width
COL.	Column	F.O.S.	Face of Stud	N.I.C.	Not In Contract	W.C.	Water Closet
CONC.	Concrete	F.R.P.	Fiber-reinforced Panel	O.C.	On Center	WD.	Wood
CONT.	Continuous	FRMG.	Framing	OPP.	Opposite	WDW.	Window
C.T.	Ceramic Tile	FT.	Feet	PLYWD.	Plywood	W.H.	Water Heater
CTR.	Counter	GA.	Gauge	PR.	Pair	W.P.	Water Proof
D	Dryer	GL.	Glass	REF.	Refrigerator	W.R.B.	Weather Resistant Barrier
DBL.	Double	GYP.	Gypsum	R.F.	Resilient Flooring	V.P.	Vapor Proof
DIA.	Diameter	H.B.	Hose Bibb	R.O.	Rough Opening		
DIM.	Dimension	H.C.	Hollow Core	S.C.	Solid Core		

LOCATION MAP

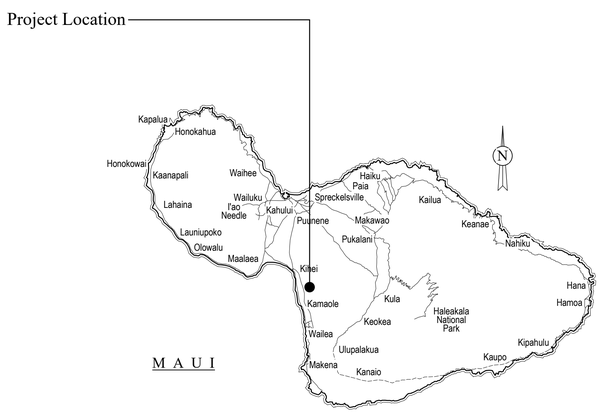

VICINITY MAP

BID SET

2145 Wells Street, Suite 301
Wailuku, Hawaii 96793
Telephone: (808) 242-6900
Fax: (808) 986-8301
Email: nai@adcmaui.com
www.nishikawaarchitectsmaui.com

Nishikawa Architects, Inc.

CLAYTON H. NISHIKAWA
LICENSED PROFESSIONAL ARCHITECT
No. 6716
HAWAII

THIS WORK WAS PREPARED BY ME OR UNDER MY SUPERVISION. CONSTRUCTION OF THIS PROJECT WILL BE UNDER MY OBSERVATION.

South Maui Community Park
Recreation Center
Liloa Drive, Kihei, Hawaii
TMK: (2) 2-2-02 : 42
Job # P12/012

REVISIONS:

Title Sheet

T-1

SHEET:
PROJECT NO: #Pln
DATE: 11/01/16

© 2017 Nishikawa Architects, Inc.
ALL DOCUMENTS AND INSTRUMENTS PREPARED BY NISHIKAWA ARCHITECTS, INC. AS INSTRUMENTS OF SERVICE SHALL REMAIN THE PROPERTY OF NISHIKAWA ARCHITECTS, INC. AND IS PROTECTED BY COPYRIGHT LAW AND MAY NOT BE REPRODUCED WITHOUT PERMISSION.

T-1 Title Sheet - Plotted on 1/23/17 at 4:31 PM by Durwin Kiyabu. File Path: BIM Server: bimserver.local - BIM Server 18/1406 SMCPG/SMCP Recreation Center 18

SHEET INDEX	
ID	Name
T-1	Title Sheet
T-2	Sheet Index

Civil

C1.01	Overall General Plan
C2.01	Legend and Abbreviations
C2.02	Standard Plans Summary
C2.03	Construction Notes
C2.04	Construction Notes
C2.05	Construction Notes
C3.01	General Site Plan
C3.02	Detailed Site Plan
C3.03	Detailed Site Plan
C4.01	Typical Driveway Sections
C4.02	Typical Site Sections
C5.01	General Grading Plan
C5.02	Detailed Grading Plan
C5.03	Detailed Grading Plan
C6.01	Intersection and Curb Ramp Details
C6.02	Intersection and Curb Ramp Details
C7.01	General Utility Plan
C7.02	Detailed Utility Plan
C7.03	Detailed Utility Plan
C8.01	Plan & Profile: Driveway "A"
C8.02	Plan & Profile: Driveway "A"
C8.03	Plan & Profile: Driveway "B"
C8.04	Plan & Profile: Driveway "C" and "C-1"
C8.05	Plan & Profile: Waterline Extension
C9.01	Plan & Profile: Retaining Wall No. 1
C9.02	Plan & Profile: Retaining Wall Nos. 2 & 3
C10.01	Signing and Striping Plan
C10.02	Signing and Striping Details
C10.03	Signing and Striping Details
C10.04	Signing and Striping Details
C11.01	Drainage Details
C11.02	Drainage Details
C11.03	Drainage Details
C12.01	Water Details
C12.02	Water Details
C13.01	Sewer Details
C14.01	Reclaimed Water (R1) Details
C15.01	Site Structures Details and Notes
C15.02	Site Structures Details and Notes
C15.03	Site Structures Details and Notes
C16.01	Miscellaneous Details
C16.02	Miscellaneous Details
C16.03	Miscellaneous Details
C17.01	Demolition Plan
C18.01	Erosion Control Plan
C18.02	Erosion Control Plan, Details and Notes
C18.03	Erosion Control Plan, Details and Notes
C19.01	Traffic Control Plan

Landscape

L-1	Overall Planting Plan
L-2	Planting Plan
L-3	Planting Plan
L-4	Irrigation Plan
L-5	Irrigation Plan
L-6	Furniture & Hardscape Details
L-7	Landscape Details and Notes
L-8	Irrigation Details & Notes
L-9	Irrigation Details & Notes

Architectural

A-1	Overall Site Plan
A-2	Site Plan
A-3	Floor Plan
A-4	Second Floor/Lower Roof Plan
A-5	Reflected Ceiling Plan
A-6	Roof Plan
A-7	Elevations
A-8	Sections
A-9	Wall Sections
A-9.1	Wall Sections
A-10	Wall Types
A-11	Detailed Plans/Interior Elev
A-12	Detailed Plans/Interior Elevations
A-13	Detailed Plans/Interior Elevations
A-14	Enlarged Bleacher Plan
A-15	Gym Striping - Court Plans
A-16	Room Finish Schedule
A-17	Door Schedule & Types
A-18	Door Details
A-19	Window Schedule & Types
A-20	Window Details
A-21	Sign Schedule
A-22	Gate Details
A-23	Misc. Details

Structural

S-1.0	General Notes
S-1.1	General Notes
S-1.2	Typical Details
S-1.3	Typical Details
S-1.4	Typical Details
S-1.5	Typical Details & Mech Platform Framing Sections
S-2.0	Foundation Plan - "A" & Foundation Plan "B"
S-2.1	Sections

Structural (cont.)

S-3.0	Foundation Plan "C"
S-3.1	Sections
S-4.0	Roof "A" - L. Roof Framing Plan, Roof "B" - L. Roof Framin…
S-4.1	Sections
S-4.2	Sections
S-5.0	Roof "A" - High Roof Framing Plan, Roof "B" - High Roof F…
S-5.1	Sections
S-6.0	Roof "C" - Low Roof Framing Plan
S-6.1	Sections
S-7.0	Roof "C" - High Roof Framing Plan
S-7.1	Sections
S-7.2	Sections
S-8.0	Braced Frame Elevations
S-8.1	Braced Frame Details

Mechanical

M-1	Plumbing Plan
M-2	Hot & Cold Water Piping Diagram
M-3	DWV Piping Diagram
M-4	Main Gym AC Plan/AC Equipment Schedule
M-5	Sections & Chilled Water Diagram
M-6	Mechanical Plan/AC Equipment Schedule
M-7	Kitchen Details
M-8	Construction Notes/Details
FS-1	Roof Level Fire Sprinkler Plan
FS-2	Lower Level Fire Sprinkler Ceiling Plan
FS-3	Fire Sprinkler Building Sections
FS-4	Fire Sprinkler Notes & Details

Electrical

E-1	Electrical Site Plan
E-2	Equipment Details/Single-line Diagram
E-3	Duct Sections/Details
E-4	Gym Electrical Plans
E-4.1	Gym Electrical Plan
E-5	Gym Signal Plan
E-5.1	Gym Signal Plan
E-6	Gym Lighting Plan
E-6.1	Gym Lighting Plan
E-7	Fixture Schedule/Sound System Diagram
E-8	Panel Schedules

Code Information

Site Data:

T.M.K.:	(2) 2-2-002: 042
Lot Area:	42.13 Acres (1,835,008.56 SF)
Zoning:	PD-K/5PK, PD-K/5OS, PD-K/5R Park, Open Space, Residential
State Land Use:	Urban
SMA:	Permit Required
Flood Hazzard:	X - Areas Determined to be outside the 0.2% annual flood

Planning Data:

	Required/Allowable	Provided
Lot Area:	4 Acres Min.	42.13
Bulding Height:		
Setbacks:	20'-0" Min.	80' N, 300' S, 65' W, 300' E
Parking:	See Detailed Breakdown on Architectural Siteplan	
Loading Zone:	2	2

Building Code Data:

2006 International Building Code
2006 International Energy Conservation Code

A. Type of Construction: II-B

B. Occupancy Group: A-3

C. Height Limitations: 55', 2 Stories

D. Allowable Floor Area:

Basic Allowable Area:	9,500 sf	
Frontage Increase:	14,250 sf	If=(834/834 -0.25) 60/30 W/30=2 If=1.5
Auto Sprinkler System:	28,500 sf	300% increase for buildings with no more than one story above grade.
Total Allowable Floor Area:	52,250 sf	
Actual Area:	31,858 sf	

E. Fire Resistance Requirements: Type II-B Construction

Structural Frame:	0 hr.
Bearing Walls - Exterior:	0 hr.
Bearing Walls Interior:	0 hr.
Nonbearing Walls & Partitions - Exterior:	0 hr.
Nonbearing Walls & Partitions - Interior:	0 hr.
Floor Construction:	0 hr.
Roof Construction:	0 hr.

F. Fire Protection Systems:
Automatic Fire Sprinkler Protection Throughout the Building

G. Minimum Roof Class:
Class C for Type II-B Buildings

BID SET

Nishikawa Architects, Inc.
2145 Wells Street, Suite 301
Wailuku, Hawaii 96793
Telephone: (808) 242-6900
Fax: (808) 986-8301
Email: nai@adcmaui.com
www.nishikawaarchitectsmaui.com

© 2017 Nishikawa Architects, Inc.

CLAYTON H. NISHIKAWA
LICENSED PROFESSIONAL ARCHITECT
No. 6710
HAWAII, U.S.A.
LICENSE EXPIRES 4/30/2018

THIS WORK WAS PREPARED BY ME OR UNDER MY SUPERVISION. CONSTRUCTION OF THIS PROJECT WILL BE UNDER MY OBSERVATION.

South Maui Community Park
Recreation Center
Liloa Drive, Kihei, Hawaii
TMK: (2) 2-2-02 : 42
Job # P12/012

REVISIONS:

Sheet Index

T-2

SHEET:
PROJECT NO: #Pln
DATE: 11/01/16

ALL DOCUMENTS AND INSTRUMENTS PREPARED BY NISHIKAWA ARCHITECTS, INC. AS INSTRUMENTS OF SERVICE SHALL REMAIN THE PROPERTY OF NISHIKAWA ARCHITECTS, INC. AND IS PROTECTED BY COPYRIGHT LAW AND MAY NOT BE REPRODUCED WITHOUT PERMISSION.

T-2 Sheet Index : Plotted on 1/23/17 at 4:31 PM by Darwin Kiyabu. File Path: BIM Server: bimserver.local - BIM Server 18/1406 SMCP/PG/SMCP Recreation Center 18

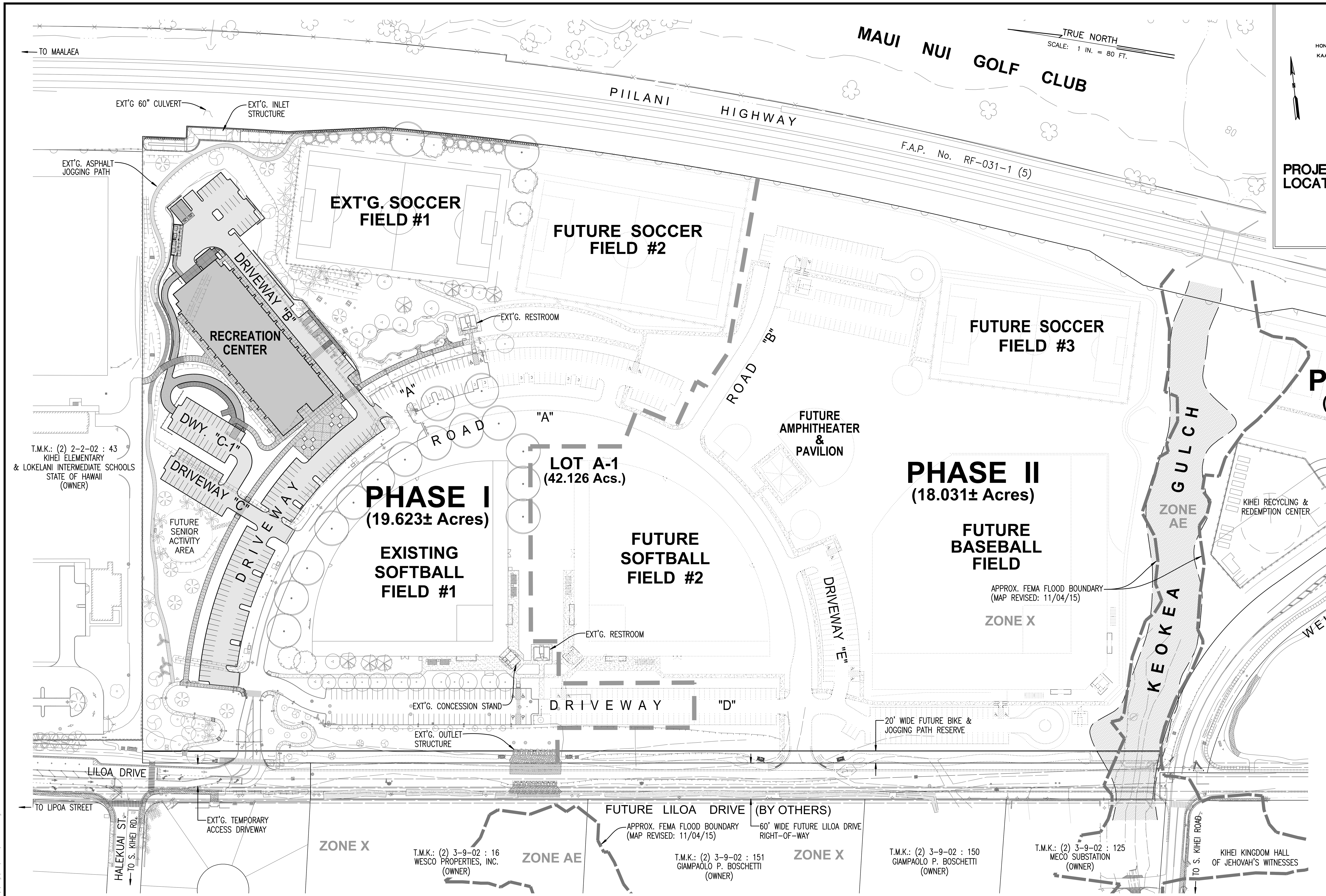

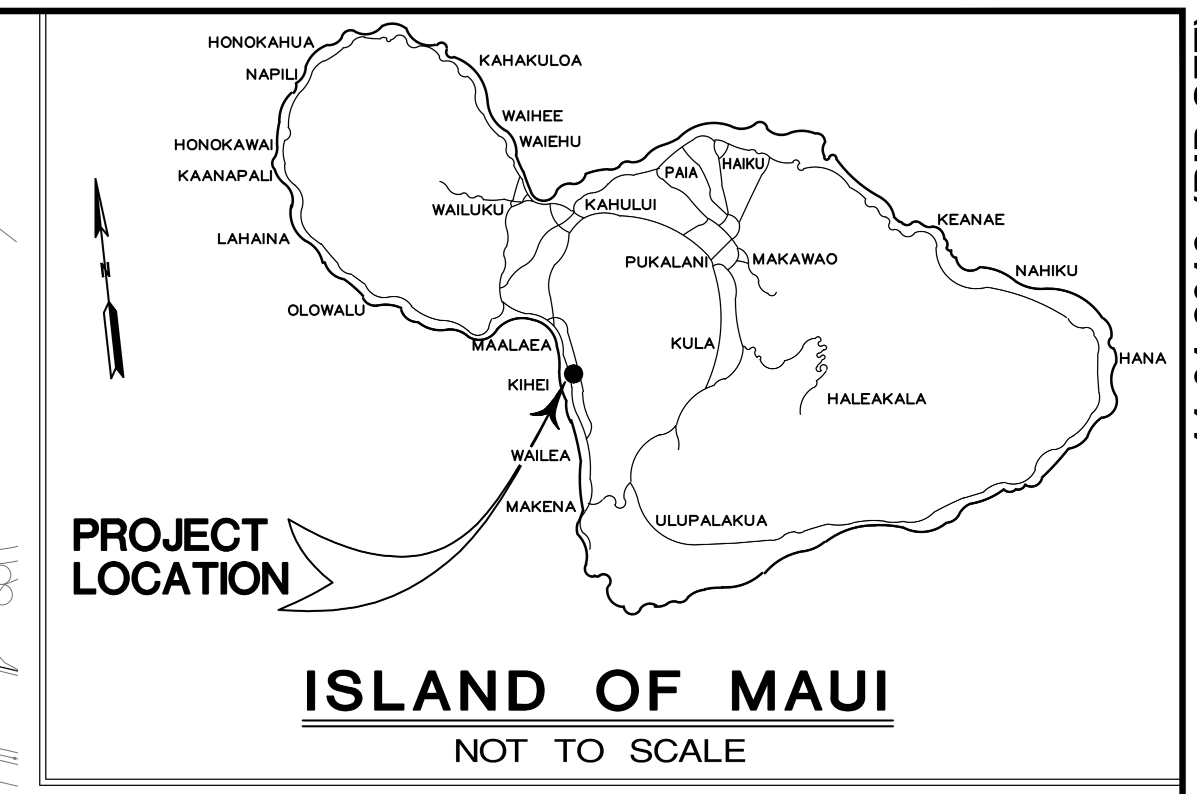

ISLAND OF MAUI
NOT TO SCALE

11-01-2016 (BID SET)

INDEX OF CIVIL DRAWINGS:

C1.01	OVERALL GENERAL PLAN
C2.01	LEGEND AND ABBREVIATIONS
C2.02	STANDARD PLANS SUMMARY
C2.03 – C2.05	CONSTRUCTION NOTES
C3.01	GENERAL SITE PLAN
C3.02 – C3.03	DETAILED SITE PLAN
C4.01	TYPICAL DRIVEWAY SECTIONS
C4.02	TYPICAL SITE SECTIONS
C5.01	GENERAL GRADING PLAN
C5.02 – C5.03	DETAILED GRADING PLAN
C6.01 – C6.02	INTERSECTION AND CURB RAMP DETAILS
C7.01	GENERAL UTILITY PLAN
C7.02 – C7.03	DETAILED UTILITY PLAN
C8.01 – C8.02	PLAN & PROFILE: DRIVEWAY "A"
C8.03	PLAN & PROFILE: DRIVEWAY "B"
C8.04	PROFILE: DRIVEWAYS "C" & "C-1"
C8.05	PLAN & PROFILE: WATERLINE EXTENSION
C9.01	PLAN & PROFILE: RETAINING WALL NO. 1
C9.02	PLAN & PROFILE: RETAINING WALL NO. 2 & 3
C10.01	SIGNING AND STRIPING PLAN
C10.02 – C10.04	SIGNING AND STRIPING DETAILS
C11.01 – C11.03	DRAINAGE DETAILS
C12.01 – C12.02	WATER DETAILS
C13.01	SEWER DETAILS
C14.01	RECLAIMED WATER (R1) DETAILS
C15.01 – C15.03	SITE STRUCTURES DETAILS AND NOTES
C16.01 – C16.03	MISCELLANEOUS DETAILS
C17.01	DEMOLITION PLAN
C18.01 – C18.03	EROSION CONTROL PLAN, DETAILS AND NOTES
C19.01	TRAFFIC CONTROL PLAN

NOTE:

1. OWNERS OF ADJOINING LANDS, SHOWN ON PLAN, ARE TAKEN FROM RECORDS FILED IN THE REAL PROPERTY MAPPING BRANCH, AND ARE SUBJECT TO VERIFICATION.

APPROVED BY:

FOR W. Carvalho 11/22/16

DIRECTOR, DEPARTMENT OF WATER SUPPLY — DATE
COUNTY OF MAUI
(Approval is limited to the Water System Improvements which will be dedicated to the Department of Water Supply)

CLIFFORD N. MUKAI
LICENSED PROFESSIONAL ENGINEER
NO. 6667-C
HAWAII, U.S.A.

SIGNATURE — License Expires: April 30, 2018 — DATE

THIS WORK WAS PREPARED BY ME OR UNDER MY SUPERVISION AND CONSTRUCTION OF THIS PROJECT WILL BE UNDER MY OBSERVATION "AS DEFINED IN SECTION 16-115-2 OF THE HAWAII ADMINISTRATIVE RULES FOR PROFESSIONAL ENGINEERS, ARCHITECTS, LAND SURVEYORS AND LANDSCAPE ARCHITECTS"

WARREN S. UNEMORI ENGINEERING, INC.
CIVIL & STRUCTURAL ENGINEERS/LAND SURVEYORS
WELLS STREET PROFESSIONAL CENTER, SUITE 403
2145 WELLS STREET, WAILUKU, MAUI, HAWAII 96793

SOUTH MAUI COMMUNITY PARK
RECREATION CENTER

PROJECT NO.: P12 / 012 TAX MAP KEY: (2) 2-2-02 : 42
Waiohuli - Keokea (Kihei), Makawao, Maui, Hawaii

TITLE OVERALL GENERAL PLAN

B.A.W. DESIGNED BY	C.N.M. CHECKED BY	03031.30 JOB NUMBER	C1.01 SHEET
D.P.T. DRAWN BY	C.N.M. APPROVED BY	Nov. 1, 2016 DATE	
SCALE	AS NOTED		OF SHEETS

REVISION	DESCRIPTION	DATE

ABBREVIATIONS:

&	AND
@	AT
#	NUMBER
ø	DIAMETER
AC	ASPHALT CONCRETE
ACCEL	ACCELERATION
ACP	ASBESTOS CEMENT PIPE
ARV	AIR RELIEF VALVE
AVE	AVENUE
AWWA	AMERICAN WATER WORKS ASSOCIATION
AZ	AZIMUTH
BB	BOTTOM OF BANK
BC	BOTTOM CURB
℄/B.L.	BASELINE
BMP	BEST MANAGEMENT PRACTICE
BOT	BOTTOM
BPU	BACKFLOW PREVENTION UNIT
BVC	BEGINNING OF VERTICAL CURVE
BW	BOTTOM OF WALL
CATV	CABLE TELEVISION
CAP	CORRUGATED ALUMINUM PIPE
CB	CATCH BASIN
CG	CHANGE IN GRADE
℄/CL	CENTERLINE
CLEAR	CLEARANCE
CLR	CLEAR
CMP	CORRUGATED METAL PIPE
CNR	CORNER
CO	CLEANOUT
CONC	CONCRETE
CONN	CONNECTION
CONT	CONTINUATION
CONST	CONSTRUCTION
COORD	COORDINATION
CORRUG	CORRUGATED
CRM	CEMENT RUBBLE MASONRY
CTB	CEMENT TREATED BASE
CULV	CULVERT
CY	CUBIC YARD
DCAB	DISABILITY & COMMUNICATION ACCESS BOARD
DCDA	DOUBLE CHECK DETECTOR ASSEMBLY
DECEL	DECELERATION
DET/DET.	DETAIL
D.I.	DUCTILE IRON
DIA/DIAM/ø	DIAMETER
D.L.	DRAINLINE
DMH	DRAIN MANHOLE
DOH	DEPARTMENT OF HEALTH
DOT	DEPARTMENT OF TRANSPORTATION
DWS	DEPARTMENT OF WATER SUPPLY
DPW	DEPARTMENT OF PUBLIC WORKS
DP&R	DEPARTMENT OF PARKS & RECREATION
DR	DRIVE
DSYL	DOUBLE SOLID YELLOW PAVEMENT STRIPE
D/W, DWY	DRIVEWAY
DWL	DASHED WHITE PAVEMENT STRIPE
ECM	EROSION CONTROL MATTING
EL./ELEV	ELEVATION
EP	EDGE OF PAVEMENT
EPR	EDGE OF PAVEMENT RADIUS
EQ.	EQUAL
EQN.	EQUATION
EQUIV.	EQUIVALENT
ES	EDGE OF SHOULDER
ESMT	EASEMENT
EVC	END OF VERTICAL CURVE
EXT.	EXTENSION
EXT'G/EXIST	EXISTING
FAB	FABRICATED
FE	FLANGED END
FEE	FINISH FLOOR ELEVATION
FH	FIRE HYDRANT
FT	FEET
GAL	GALLON
GALV	GALVANIZED
G.C.	GRADE CONTROL
GDI	GRATED DRAIN INLET
GICB	GRATED INLET CATCH BASIN
GRD	GROUND
GRP	GROUTED RUBBLE PAVING
GUT	GUTTER
G.V.	GATE VALVE
HDPE	HIGH DENSITY POLYETHYLENE
HDWL	HEADWALL
HH	HANDHOLE
HMA	HOT MIX ASPHALT
HMAB	HOT MIX ASPHALT BASE
HMGB	HOT MIX GLASSPHALT BASE
HORIZ	HORIZONTAL
HTEL	HAWAIIAN TELCOM
HWY	HIGHWAY
H.S.S.	HAWAII STANDARD SPECIFICATIONS FOR ROAD AND BRIDGE CONSTRUCTION, 2005
I.B.	INBOUND
IN	INCHES
INV	INVERT ELEVATION
L	LENGTH
LB.	POUND
LF	LINEAR FEET
LP	LIGHT POLE
LT	LEFT
MAX	MAXIMUM
MECO	MAUI ELECTRIC COMPANY
MIN	MINIMUM
MISC	MISCELLANEOUS
MM	MILLIMETER
MPH	MILES PER HOUR
MSL	MEAN SEA LEVEL
MUTCD	MANUAL ON UNIFORM TRAFFIC CONTROL DEVICES, FHWA, 2009
N.I.C.	NOT IN CONTRACT
NO/#	NUMBER
NTS	NOT TO SCALE
O.B.	OUTBOUND
O.C.	ON CENTER
O.D.	OUTER DIAMETER
O/S	OFFSET
OTWC	OCEANIC TIME WARNER CABLE
PAV'T/PAVT	PAVEMENT
P.C.C.	PORTLAND CEMENT CONCRETE
PE	PLAIN END
PERIM	PERIMETER
PIVC	POINT OF INTERSECTION ON VERTICAL CURVE
POC	POINT OF CURVE
PPM	PARTS PER MILLION
PRVC	POINT OF REVERSE VERTICAL CURVATURE
PSI	POUNDS PER SQUARE INCH
PT	POINT
PVC	POLYVINYL CHLORIDE
PVGC	POINT OF VERTICAL GRADE CHANGE
R	RADIUS
RCP	REINFORCED CONCRETE PIPE
RD	ROAD
REINF/REF.	REINFORCED
REQ'D	REQUIRED
RPM	REFLECTIVE PAVEMENT MARKER
RT/RT.	RIGHT
R/W, ROW	RIGHT-OF-WAY
RW	RECLAIMED WATER
S	SLOPE
S.E.	SUPERELEVATION
SF	SQUARE FEET
SHLDR.	SHOULDER
SHT/SHT.	SHEET
SIC	SANDWICH ISLE COMMUNICATIONS
SIM.	SIMILAR
SL.	SLOPE
S.L.	STREET LIGHT
SLB	STREET LIGHT BOX
SLP	STREET LIGHT POLE
SRAP	SPIRAL RIBBED ALUMINUM PIPE
ST	STREET
ST. STL.	STAINLESS STEEL
STA	STATION
STD	STANDARD
S/W	SIDEWALK
SWL	SOLID WHITE PAVEMENT STRIPE
SWTS	STORMWATER TREATMENT SYSTEM
SYL	SOLID YELLOW PAVEMENT STRIPE
TB	TOP OF BANK
TC	TOP OF CURB
TEL	TELEPHONE
TEMP	TEMPORARY
TERM	TERMINUS
TFE	TOP OF FOOTING ELEVATION
TMK	TAX MAP KEY
TSB	TRAFFIC SIGNAL BOX
TSP	TRAFFIC SIGNAL POLE/LIGHT
TW	TOP OF WALL
TYP	TYPICAL
USACE	U.S. ARMY CORPS OF ENGINEERS
UTW	ULTRA-THIN WHITETOPPING
UTB	UNTREATED AGGREGATE BASE
VERT	VERTICAL
V.C.	VERTICAL CURVE
W/	WITH
W.L.	WATER LINE
WMH	WATER MANHOLE
WV	WATER VALVE
WWF	WELDED WIRE FABRIC

LEGEND:

- SEWER MANHOLE
- DRAIN MANHOLE
- CURB INLET CATCH BASIN
- GRATED INLET CATCH BASIN
- FIRE HYDRANT
- RECLAIMED (R1) WATER FIRE HYDRANT
- AIR RELIEF VALVE
- CLEANOUT TO GRADE
- WATER VALVE
- RECLAIMED (R1) WATER VALVE
- DC — DETECTOR CHECK
- WATER MANHOLE
- FIRE DEPARTMENT CONNECTION
- GT — GREASE INTERCEPTOR
- EXISTING BACKFLOW PREVENTER
- EXISTING WATER METERS
- D24" — DRAINLINE W/ SIZE
- S8" — SEWERLINE W/ SIZE
- W12" — WATERLINE W/ SIZE
- WF12" — WATERLINE (FIRE) W/ SIZE
- FRW10" — FUTURE RECLAIMED WATERLINE W/ SIZE
- FD24" — FUTURE DRAINLINE W/ SIZE
- FS8" — FUTURE SEWERLINE W/ SIZE
- FW12" — FUTURE WATERLINE W/ SIZE
- ERW8" — EXISTING RECLAIMED WATERLINE W/ SIZE
- ED24" — EXISTING DRAINLINE W/ SIZE
- ES8" — EXISTING SEWERLINE W/ SIZE
- EW8" — EXISTING WATERLINE W/ SIZE
- 70 — FINISH GRADE W/ ELEVATION
- 70 — EXISTING GRADE W/ ELEVATION
- 26.5 — EXISTING SPOT ELEVATION
- 25.00 — FINISH GRADE SPOT ELEVATION
- GRASSPAVE2 POROUS PAVEMENT SYSTEM
- ASPHALT JOGGING PATH
- STANDARD SIDEWALK SECTION
- REINFORCE CONCRETE PAVEMENT SECTION (SEE SHT. C16.01)
- NO VEHICULAR ACCESS PERMITTED
- VEHICULAR ACCESS PERMITTED
- FUTURE IMPROVEMENTS (BY OTHERS)
- CONCRETE OR MASONRY RETAINING WALLS
- TOP OF BANK
- BOTTOM OF BANK
- CENTERLINE OF SWALE
- ARCHAEOLOGICAL SITES – DATA RECOVERY COMPLETED
- ARCHAEOLOGICAL SITES – PRESERVED
- 100 YEAR KEOKEA GULCH FEMA INUNDATION LIMITS (Q_{100} = 8,008 c.f.s.)
- WHEEL CHAIR RAMP
- ACCESSIBLE UNIT OR PARKING STALL
- SIGN
- DIAGONALLY STRIPED AISLE OR ISLAND
- EV — ELECTRIC VEHICLE CHARGING STATION
- DETECTABLE WARNING ON CURB RAMPS
- FLOW DIRECTION
- F.F.E. — FINISH FLOOR ELEVATION
- DW — DRYWELL
- EXISTING FENCE (SEE PLAN CALLOUT FOR TYPE)
- EXISTING PICNIC TABLE
- EXISTING BLEACHER (80 SEAT CAPACITY)
- EXISTING RESTROOM
- EXISTING SCOREKEEPER'S BOOTH
- EXISTING STREET LIGHT
- EXISTING POWER POLE
- 215°36'30" — 300.00 — TIES TO BLDG. CORNERS (CONTRACTOR TO VERIFY ALL DIMENSIONS & CONSISTENCY W/ ARCH. PLANS & IN FIELD PRIOR TO CONSTRUCTION OF FOUNDATIONS & BLDGS.
- PARKING LIGHT POLE, TYPE E
- T — TRANSFORMER PAD

11-01-2016 (BID SET)

REVISION	DESCRIPTION	DATE

CLIFFORD N. MUKAI
LICENSED PROFESSIONAL ENGINEER
NO. 6667-C
HAWAII, U.S.A.

License Expires: April 30, 2018

SIGNATURE DATE

THIS WORK WAS PREPARED BY ME OR UNDER MY SUPERVISION AND CONSTRUCTION OF THIS PROJECT WILL BE UNDER MY OBSERVATION "AS DEFINED IN SECTION 16-115-2 OF THE HAWAII ADMINISTRATIVE RULES FOR PROFESSIONAL ENGINEERS, ARCHITECTS, LAND SURVEYORS AND LANDSCAPE ARCHITECTS"

WARREN S. UNEMORI ENGINEERING, INC.
CIVIL & STRUCTURAL ENGINEERS/LAND SURVEYORS
WELLS STREET PROFESSIONAL CENTER, SUITE 403
2145 WELLS STREET, WAILUKU, MAUI, HAWAII 96793

SOUTH MAUI COMMUNITY PARK RECREATION CENTER

PROJECT NO.: P12 / 012 TAX MAP KEY: (2) 2-2-02 : 42
Waiohuli - Keokea (Kihei), Makawao, Maui, Hawaii

TITLE LEGEND AND ABBREVIATIONS

B.A.W. DESIGNED BY	C.N.M. CHECKED BY	03031.30 JOB NUMBER	C2.01 SHEET
D.P.T. DRAWN BY	C.N.M. APPROVED BY	Nov. 1, 2016 DATE	OF SHEETS
AS NOTED SCALE			

I:\Projects\03proj\03031.30 - South Maui Comm Park - Gymnasium (ADC)\dwg\congrlans\legend and abbreviation-00.dwg

STANDARD PLANS SUMMARY

STANDARD PLAN NO.	TITLE	DATE
B-01 ●	NOTES & MISCELLANEOUS DETAILS	05/31/07
B-03 ●	BACKFILL DETAILS AT EARTH RETAINING STRUCTURES	05/31/07
B-12	PRESTRESSED CONCRETE PILES & COMPRESSION SPLICE	05/31/07
	CAN DETAILS	
B-12A	PRESTRESSED CONCRETE PILES, PILE & COMPRESSION	05/31/07
	SPLICE CAN DETAILS & NOTES	
B-12B	PILE INTERACTION DIAGRAM	05/31/07
B-13	PRESTRESSED CONCRETE PILE BUILD-UP DETAILS	05/31/07

D-01	CATTLE GATE	05/31/07
D-02 ●	CHAIN LINK FENCE WITH TOPRAIL	05/31/07
D-03 ●	CHAIN LINK FENCE WITHOUT TOPRAIL	05/31/07
D-04	WIRE FENCE WITH METAL POSTS	05/31/07
D-05	TYPICAL DETAILS OF CURBS AND/OR GUTTERS	05/31/07
D-06	TYPICAL DETAIL OF REINFORCED CONCRETE DROP DRIVEWAY	05/31/07
D-07	CENTERLINE AND REFERENCE SURVEY MONUMENTS	05/31/07
D-08	STREET SURVEY MONUMENT	05/31/07
D-15	CONCRETE SIDEWALK	05/31/07
D-16	P.C.C. BUS PAD	05/31/07
D-17	P.C.C. BUS PAD	05/31/07
D-18	P.C.C. PAVEMENT LAYOUT	05/31/07
D-19	P.C.C. PAVEMENT W/ PERMEABLE BASE JOINT DETAILS	05/31/07
D-20	P.C.C. PAVEMENT W/ PERMEABLE BASE JOINT DETAILS	05/31/07
D-21	P.C.C. LONGITUDINAL JOINT DETAILS	05/31/07
D-22	P.C.C. CONNECTION TO CURBS AND GUTTERS	05/31/07
D-23	JOINTS	05/31/07

L-01	TREE PLANTING	08/16/06
L-02	TREE PLANTING	08/16/06
L-03	TREE TRANSPLANTING	08/16/06
L-04	PALM PLANTING	08/16/06
L-05	SHRUB PLANTING	08/16/06
L-06	LANDSCAPE DETAILS	08/16/06
L-07	LANDSCAPE DETAILS	08/16/06
L-08	LANDSCAPE DETAILS	08/16/06
L-09	LANDSCAPE DETAILS	08/16/06
L-10	LANDSCAPE DETAILS	08/16/06
L-11	PLANTING NOTES	08/16/06
L-12	IRRIGATION DETAILS	08/16/06
L-13	IRRIGATION DETAILS	08/16/06
L-14	IRRIGATION DETAILS	08/16/06
L-15	IRRIGATION DETAILS	08/16/06
L-16	IRRIGATION DETAILS	08/16/06
L-17	IRRIGATION DETAILS	08/16/06
L-18	IRRIGATION DETAILS	08/16/06
L-19	IRRIGATION DETAILS	08/16/06
L-20	IRRIGATION DETAILS	08/16/06
L-21	IRRIGATION DETAILS	08/16/06
L-22	IRRIGATION DETAILS	08/16/06
L-23	IRRIGATION DETAILS	08/16/06
L-24	IRRIGATION NOTES	08/16/06

STANDARD PLAN NO.	TITLE	DATE
H-01A	TYPE A CATCH BASIN	05/31/07
H-01B	TYPE B CATCH BASIN	05/31/07
H-01C	TYPE C CATCH BASIN	05/31/07
H-01D	TYPE D CATCH BASIN	05/31/07
H-01E	CATCH BASIN SECTIONS	05/31/07
H-02A	TYPE A1 CATCH BASIN	05/31/07
H-02B	TYPE B2 CATCH BASIN	05/31/07
H-02C	TYPE C1 CATCH BASIN	05/31/07
H-02D	TYPE D1 CATCH BASIN	05/31/07
H-02E	CATCH BASIN SECTION	05/31/07
H-03 ●	TYPE A,B, AND C STORM DRAIN MANHOLE	05/31/07
H-04	TYPE D STORM DRAIN MANHOLE	05/31/07
H-05 ●	TYPICAL REINFORCING DETAILS FOR DRAINAGE STRUCTURES	05/31/07
H-06 ●	TYPICAL REINFORCING DETAILS FOR DRAINAGE STRUCTURES	05/31/07
H-07 ●	CATCH BASIN AND MANHOLE CASTINGS	05/31/07
H-08	TYPE 1A-9 AND 1A-9P GRATED DROP INLET	05/31/07
H-09	TYPE 2A-9 AND 2A-9P GRATED DROP INLET	05/31/07
H-10	TYPE A-9 OR A-9P STEEL FRAMES	05/31/07
H-11	TYPE A-9 AND A-9P STEEL GRATES	05/31/07
H-12	TYPE 61614P AND 1211214P GRATED DROP INLET	05/31/07
H-13	TYPE 61616P AND 1211216P GRATED DROP INLET	05/31/07
H-14	TYPE 61214P GRATED DROP INLET	05/31/07
H-15	TYPE 1211214, 1211214P, 1211216, 1211216P STEEL	05/31/07
	FRAME AND GRATES	
H-16	TYPE 61614, 61614P, 61616, 61616P STEEL FRAME	05/31/07
	AND GRATES	
H-17	TYPE 61214 STEEL FRAMES AND GRATES	05/31/07
H-18	TYPE 61214P STEEL GRATES	05/31/07
H-19	TYPE 61614B STEEL FRAME AND GRATES	05/31/07
H-20	CEMENT RUBBLE MASONRY STRUCTURES	05/31/07
H-21	CONCRETE AND CEMENT RUBBLE MASONRY STRUCTURES	05/31/07
H-22	INLET/OUTLET STRUCTURE	05/31/07
H-23	INLET/OUTLET STRUCTURE	05/31/07
H-24	FLARED END SECTION FOR CULVERTS	05/31/07
H-25	FLARED END SECTION FOR CULVERTS	05/31/07
H-26	CONCRETE SPILLWAY INLET	05/31/07
H-27	CAP COUPLING DETAILS STANDARD JOINT	05/31/07
H-28 ●	REINFORCED CONCRETE COLLAR & JACKET	05/31/07
H-29	UNDERDRAIN CLEANOUT STEEL FRAME AND COVER	05/31/07
H-30	UNDERDRAIN CONNECTION TO DRAINAGE STRUCTURE	05/31/07

TE-01 ●	SIGN HEIGHT AND LOCATION	07/11/08
TE-1A ●	SIGN INSTALLATION	07/11/08
TE-02A	GALVANIZED FLANGED CHANNEL SIGN POST MOUNTING	05/31/07
TE-02B	GALVANIZED FLANGED CHANNEL SIGN POST MOUNTING	05/31/07
TE-02C	GALVANIZED FLANGED CHANNEL SIGN POST MOUNTING	05/31/07
TE-03A ●	GALVANIZED SQUARE TUBE SIGN POST MOUNTING	05/31/07
TE-03B ●	GALVANIZED SQUARE TUBE SIGN POST MOUNTING	05/31/07
TE-04 ●	REGULATORY SIGNS	07/11/08
TE-05 ●	WARNING SIGNS	07/11/08
TE-06 ●	MISCELLANEOUS SIGNS	07/11/08
TE-07 ●	CONSTRUCTION SIGNS	07/11/08
TE-08	MISCELLANEOUS INTERSECTION SIGNS	07/11/08

STANDARD PLAN NO.	TITLE	DATE
TE-09	BIKE ROUTE SIGN & SUPPLEMENTARY PLATES	07/11/08
TE-10	INTERSTATE ROUTE MARKER	07/11/08
TE-11	STATE ROUTE MARKER AND AUXILIARY MARKERS	07/11/08
TE-12	STATE ROUTE MARKER AND BORDER DETAIL FOR	07/11/08
	GUIDE SIGNS	
TE-12A	ROUTE SIGN ASSEMBLIES	07/11/08
TE-13	STREET NAME SIGN ON MAST ARM	07/11/08
TE-14	MISCELLANEOUS REFLECTOR MARKERS	07/11/08
TE-15	OBJECT MARKERS	07/11/08
TE-16	MILE POSTS	07/11/08
TE-17A	CANTILEVER OVERHEAD SIGN ELEVATION & DETAILS	05/31/07
TE-17B	CENTILEVER SIGN FRAME DETAIL AND SECTION	05/31/07
TE-17C	CANTILEVER SIGN FRAME DETAIL	05/31/07
TE-17D	CENTILEVER SIGN FRAME SECTION	05/31/07
TE-17E	CENTILEVER SIGN FRAME DETAILS	05/31/07
TE-18A	TWO POST OVERHEAD SIGN FRAME ELEVATIONS	05/31/07
TE-18B	TWO POST SIGN FRAMING PLAN SECTION	05/31/07
TE-18C	TWO POST SIGN FRAMING SECTIONS AND DETAILS	05/31/07
TE-18D	TWO POST SIGN FRAME DETAILS	05/31/07
TE-18E	TWO POST SIGN FRAME DETAILS	05/31/07
TE-19A	OVERHEAD SIGN FRAMING SCHEDULE	05/31/07
TE-19B	SIGN POST DRILLED SHAFT FOUNDATION	05/31/07
TE-19C	SPREAD FOOTING	05/31/07
TE-19D	SIGN FRAME FOUNDATION SCHEDULE	05/31/07
TE-19D.1	SIGN FRAME FOUNDATION SCHEDULE	05/31/07
TE-19D.2	SIGN FRAME FOUNDATION SCHEDULE	05/31/07
TE-19D.3	SIGN FRAME FOUNDATION SCHEDULE	05/31/07
TE-19D.4	SIGN FRAME FOUNDATION SCHEDULE	05/31/07
TE-19D.5	SIGN FRAME FOUNDATION SCHEDULE	05/31/07
TE-19E	ANCHORAGE DETAILS	05/31/07
TE-19F	ANCHORAGE DETAILS	05/31/07
TE-19G	MISCELLANEOUS SIGN FRAME DETAILS	05/31/07
TE-19H	LUMINAIRE WALKWAY SUPPORT	05/31/07
TE-19J	FIXED MESSAGE LUMINAIRE SUPPORT	05/31/07
TE-19K	MISCELLANEOUS SIGN DETAILS	05/31/07
TE-19L	MISCELLANEOUS SIGN DETAILS	05/31/07
TE-19M	MISCELLANEOUS SIGN FRAME DETAILS	05/31/07
TE-20	SUPPORTS FOR GROUND MOUNTED GUIDE SIGN	05/31/07
TE-20A	SUPPORTS FOR GROUND MOUNTED GUIDE SIGN	05/31/07
TE-20B	SUPPORTS FOR GROUND MOUNTED GUIDE SIGN	05/31/07
TE-20C	SUPPORTS FOR GROUND MOUNTED GUIDE SIGN	05/31/07
TE-21A	SIGN BREAKAWAY MOUNTS	05/31/07
TE-21B	SIGN BREAKAWAY MOUNTS	05/31/07
TE-22	LAMINATED ALUMINUM SIGN PANELS (OVERHEAD)	05/31/07
TE-23	LAMINATED ALUMINUM SIGN PANELS (GROUND MOUNTED)	07/11/08
TE-24	SOLID ALUMINUM EXTRUDED SIGN PANEL AND	05/31/07
	ACCESSORY DETAILS	
TE-25	GUIDE SIGNS LUMINAIRE MOUNTINGS	05/31/07
TE-26	RAISED PAVEMENT MARKERS AND STRIPING	07/11/08
TE-27	RAISED PAVEMENT MARKERS AND STRIPING	07/11/08
TE-28	ENTRANCE AND EXIT PAVEMENT MARKINGS	07/11/08
TE-28A ●	MISCELLANEOUS PAVEMENT MARKINGS	07/11/08
TE-29	PAVEMENT ARROWS AND SYMBOLS	07/11/08
TE-30	PAVEMENT ALPHABETS, NUMBERS & SYMBOLS	07/11/08
TE-31	PAVEMENT ALPHABETS, NUMBERS & SYMBOLS	07/11/08

STANDARD PLAN NO.	TITLE	DATE
TE-32	TYPE I & II TRAFFIC SIGNAL SYSTEM MISC. DETAILS	05/31/07
TE-33	TYPE II TRAFFIC SIGNAL SYSTEM	08/16/06
TE-33A.1	TYPE II TRAFFIC SIGNAL STANDARD	05/31/07
TE-33A.2	TYPE II TRAFFIC SIGNAL STANDARD	05/31/07
TE-34	LOOP DETECTOR DETAILS	07/11/08
TE-35	LOOP DETECTORS & DUCT DETAILS	07/11/08
TE-36	TRAFFIC SIGNAL DETAILS	07/11/08
TE-37	PULLBOX & COVER DETAILS	07/11/08
TE-37A	TYPE "A" TRAFFIC PULLBOX	05/31/07
TE-37B	TYPE "A" TRAFFIC PULLBOX REINFORCING	05/31/07
TE-37C	TYPE "B" TRAFFIC PULLBOX	05/31/07
TE-37D	TYPE "B" TRAFFIC PULLBOX REINFORCING	05/31/07
TE-37E	TYPE "B" TRAFFIC PULLBOX FOUNDATION	05/31/07
TE-37F	TYPE "C" TRAFFIC PULLBOX	05/31/07
TE-37G	TYPE "C" TRAFFIC PULLBOX REINFORCING	05/31/07
TE-37H	TYPE "C" TRAFFIC PULLBOX FOUNDATION	05/31/07
TE-37J	TRAFFIC PULLBOX COVER AND DETAILS	05/31/07
TE-38	TYPE III TRAFFIC SIGNAL STANDARD	05/31/07
TE-38A.1	TYPE III TRAFFIC SIGNAL STANDARD	05/31/07
TE-38A.2	TYPE III TRAFFIC SIGNAL STANDARD	05/31/07
TE-39	METAL GUARDRAIL CONNECTION TO CONCRETE BARRIER	07/11/08
TE-40	CONCRETE BARRIER TRANSITION	05/31/07
TE-40A	CONCRETE BARRIER TRANSITION SECTIONS	05/31/07
TE-41	GUARDRAIL TYPE 4 (RIGID BARRIER)	05/31/07
TE-42	PORTABLE CONCRETE BARRIER	05/31/07
TE-43	PORTABLE CONCRETE BARRIER	05/31/07
TE-44	GUARDRAIL TYPE 4 MISCELLANEOUS DETAILS	07/11/08
TE-45 ●	BARRICADES	07/11/08
TE-46	DELINEATION & PAVEMENT MARKINGS AT NARROW BRIDGES	07/11/08
TE-47	HIGHWAY LIGHT STANDARD	05/31/07

NOTES:

1. "STANDARD PLANS" REFERS TO STATE OF HAWAII, DEPARTMENT OF TRANSPORTATION, HIGHWAYS DIVISION, STANDARD PLANS.
2. STANDARD PLANS APPLICABLE TO THIS PROJECT ARE INDICATED BY A "●" NEXT TO STANDARD PLAN NO. (FOR EXAMPLE: D-07●)

REVISION	DESCRIPTION	DATE

CLIFFORD N. MUKAI
LICENSED PROFESSIONAL ENGINEER
NO. 6667-C
HAWAII, U.S.A.

License Expires: April 30, 2018

SIGNATURE DATE

THIS WORK WAS PREPARED BY ME OR UNDER MY SUPERVISION AND CONSTRUCTION OF THIS PROJECT WILL BE UNDER MY OBSERVATION "AS DEFINED IN SECTION 16-115-2 OF THE HAWAII ADMINISTRATIVE RULES FOR PROFESSIONAL ENGINEERS, ARCHITECTS, LAND SURVEYORS AND LANDSCAPE ARCHITECTS"

WARREN S. UNEMORI ENGINEERING, INC.
CIVIL & STRUCTURAL ENGINEERS/LAND SURVEYORS
WELLS STREET PROFESSIONAL CENTER, SUITE 403
2145 WELLS STREET, WAILUKU, MAUI, HAWAII 96793

SOUTH MAUI COMMUNITY PARK RECREATION CENTER

PROJECT NO.: P12 / 012 TAX MAP KEY: (2) 2-2-02 : 42
Waiohuli - Keokea (Kihei), Makawao, Maui, Hawaii

TITLE STANDARD PLANS SUMMARY

B.A.W. DESIGNED BY	C.N.M. CHECKED BY	03031.30 JOB NUMBER	C2.02 SHEET
D.P.T. DRAWN BY	C.N.M. APPROVED BY	Nov. 1, 2016 DATE	OF SHEETS
SCALE AS NOTED			

11-01-2016 (BID SET)

W:\Projects\03proj\03031.30 - South Maui Comm Park - Gymnasium (ADC)\dwg\contplans\sdot-sht-00.dwg

11-01-2016 (BID SET)

CONSTRUCTION NOTES:

CONSTRUCTION NOTES WITHIN COUNTY RIGHT-OF-WAY:

1. CONTRACTOR SHALL OBTAIN THE FOLLOWING FROM THE DEVELOPMENT SERVICES ADMINISTRATION:
   A. "WORK TO PERFORM ON COUNTY HIGHWAYS PERMIT", TWO (2) WEEKS PRIOR TO COMMENCEMENT OF WORK.
   B. "DRIVEWAY PERMIT", TWENTY-FOUR (24) HOURS PRIOR TO COMMENCEMENT OF WORK ON ANY DRIVEWAY.
   C. "GRADING PERMIT", FOUR (4) WEEKS PRIOR TO COMMENCEMENT OF ANY CLEARING AND GRUBBING. A SATISFACTORY DUST AND EROSION CONTROL PLAN AND/OR OUTLINE SHALL BE SUBMITTED BY THE CONTRACTOR.
2. STANDARD DETAIL DRAWINGS AND STANDARD SPECIFICATIONS OF THE DEPARTMENT OF PUBLIC WORKS SHALL BE INCLUDED AS PART OF THE CONSTRUCTION PLANS.
3. ALL CONSTRUCTION WORK SHALL STRICTLY CONFORM TO THE LATEST VERSION OF THE HAWAII STANDARD SPECIFICATIONS FOR ROAD AND BRIDGE CONSTRUCTION, AND THE SEPTEMBER 1984 "STANDARD DETAILS" FOR PUBLIC WORKS CONSTRUCTION OF THE DEPARTMENT OF PUBLIC WORKS, AS AMENDED.
4. IF EXISTING UTILITIES, WHETHER OR NOT SHOWN ON PLANS, ARE DAMAGED DURING CONSTRUCTION, THE CONTRACTOR SHALL AT HIS OWN EXPENSE BE REQUIRED TO REPAIR SUCH UTILITIES.
5. CONTRACTOR SHALL PROVIDE, INSTALL AND MAINTAIN ALL NECESSARY SIGNS, LIGHTS, FLARES, BARRICADES, AND OTHER PROTECTIVE DEVICES FOR THE PROTECTION, SAFETY AND CONVENIENCE OF THE PUBLIC, ACCORDING TO THE LATEST VERSION OF THE "MANUAL ON UNIFORM TRAFFIC CONTROL DEVICE FOR STREETS AND HIGHWAYS", AND TO THE RULES AND REGULATIONS GOVERNING THE USE OF TRAFFIC CONTROL DEVICES AT WORKSITES AND/OR ADJACENT TO PUBLIC STREETS AND HIGHWAYS ADOPTED BY THE HIGHWAY SAFETY COORDINATOR AND THE U.S. FEDERAL HIGHWAY ADMINISTRATION "MANUAL ON UNIFORM TRAFFIC CONTROL DEVICES FOR HIGHWAY CONSTRUCTION AND MAINTENANCE OPERATIONS".
6. THE DIRECTOR OF PUBLIC WORKS, THE DIRECTOR OF THE DEPARTMENT OF WATER SUPPLY AND/OR DIRECTOR OF DEPARTMENT OF PARKS & RECREATION (DP&R) HAS THE RIGHT TO STOP CONSTRUCTION SHOULD ANY WORK BE FOUND CONTRARY TO THE APPROVED CONSTRUCTION PLAN OR DETRIMENTAL TO THE PUBLIC'S INTEREST.
7. THE CONTRACTOR SHALL SCHEDULE A PRE-CONSTRUCTION MEETING WITH THE DEVELOPMENT SERVICES ADMINISTRATION FIVE (5) DAYS PRIOR TO COMMENCEMENT OF CONSTRUCTION.
8. THE CONTRACTOR SHALL, AT HIS OWN EXPENSE, KEEP THE PROJECT AREA AND SURROUNDING AREA FREE FROM DUST NUISANCE. THE WORK SHALL BE IN CONFORMANCE WITH AIR POLLUTION CONTROL STANDARDS AND REGULATIONS OF THE STATE DEPARTMENT OF HEALTH AND COUNTY GRADING ORDINANCE.
9. THE CONTRACTOR SHALL REMOVE ALL SILT AND DEBRIS RESULTING FROM HIS WORK AND DEPOSITED IN DRAINAGE FACILITIES, ROADWAYS AND OTHER AREAS. THE COST INCURRED FOR ANY NECESSARY REMEDIAL ACTION ORDERED BY THE DIRECTOR OF PUBLIC WORKS SHALL BE PAID BY THE CONTRACTOR.
10. CONSTRUCTION DEBRIS AND WASTES SHALL BE DEPOSITED AT AN APPROPRIATE WORK SITE. THE CONTRACTOR SHALL INFORM THE DIRECTOR OF PUBLIC WORKS OF THE LOCATION OF THE DISPOSAL SITES. THE DISPOSAL SITE MUST FULFILL THE REQUIREMENTS OF THE GRADING ORDINANCE.
11. THE CONTRACTOR SHALL SUBMIT A TIFF AND FIVE (5) COPIES OF THE "AS-BUILT" DRAWINGS PRIOR TO THE FINAL APPROVAL OF THE IMPROVEMENTS.
12. IF THE CLEARANCE BETWEEN A WASTEWATER LINE AND A NEW OR EXISTING WATERLINE IS EIGHTEEN INCHES (18") OR LESS, THE WASTEWATER LINE SHALL BE CONCRETE-JACKETED IN ACCORDANCE WITH THE STANDARD DETAILS OF PUBLIC WORKS CONSTRUCTION DATED SEPTEMBER 1984, AS AMENDED.
13. SHOULD HISTORIC SITES SUCH AS WALLS, PLATFORMS, PAVEMENTS, OR MOUNDS, OR REMAINS SUCH AS ARTIFACTS BURIALS, CONCENTRATION OF SHELL OR CHARCOAL BE ENCOUNTERED DURING CONSTRUCTION ACTIVITIES, WORK SHALL CEASE IMMEDIATELY IN THE IMMEDIATE VICINITY OF THE FIND AND THE FIND SHALL BE PROTECTED FROM FURTHER DAMAGE. THE CONTRACTOR AND/OR LANDOWNER SHALL IMMEDIATELY CONTACT THE STATE HISTORIC PRESERVATION DIVISION (692-8015), WHICH WILL ASSESS THE SIGNIFICANCE OF THE FIND AND RECOMMEND AN APPROPRIATE MITIGATION MEASURE, IF NECESSARY.
14. THE COUNTY OF MAUI IS NOT RESPONSIBLE FOR ANY PARK, ROADWAY, EASEMENT (INCLUDING BUT NOT LIMITED TO DRAINAGE, SEWER, ACCESS, RECLAIMED WATER, OR AVIGATION EASEMENT), OR ANY OTHER INTEREST IN REAL PROPERTY SHOWN ON THIS MAP OR SHOWN ON THESE PLANS, UNLESS THE MAUI COUNTY COUNCIL HAS ACCEPTED ITS DEDICATION BY A RESOLUTION APPROVED BY A MAJORITY OF COUNCIL MEMBERS AT A REGULAR OR SPECIAL MEETING OF THE MAUI COUNTY COUNCIL OR THE COUNTY OF MAUI HAS SIGNED ITS ACCEPTANCE VIA A CONVEYANCE DOCUMENT RECORDED IN THE BUREAU OF CONVEYANCES OF THE STATE OF HAWAII IN COMPLIANCE WITH MAUI COUNTY CODE SECTION 3.44.015.
15. STEEL PLATE WARNING SIGNS ARE REQUIRED FOR ALL STEEL PLATES IN THE RIGHT-OF-WAY.
16. WHEELCHAIR RAMP INSPECTION/CERTIFICATION FORMS SHALL BE REQUIRED FOR ALL NEWLY CONSTRUCTED RAMPS.
17. ALL STRIPING AND PAVEMENT MARKINGS SHALL BE OF THERMOPLASTIC MATERIAL.
18. COMPACTION REQUIREMENTS
   A. TESTING OF MATERIALS SHALL BE CONDUCTED BY THE PROJECT SOILS ENGINEER, CONTRACTED BY THE COUNTY OF MAUI, IN ACCORDANCE WITH ASTM STANDARD METHODS OR AS SPECIFIED BY THE DEPARTMENT OF PUBLIC WORKS, ENGINEERING DIVISION. THE TYPE AND FREQUENCY OF TESTS SHALL BE CONSISTENT WITH THE RECOMMENDATIONS OF THE PROJECT SOILS ENGINEER AND SHALL MEET OR EXCEED THE FOLLOWING:
      i. EMBANKMENT/SELECT BORROW AND SUBGRADE MATERIALS: ONE (1) COMPACTION TEST PER 600 SQUARE YARDS PER LIFT;
      ii. AGGREGATE SUBBASE COURSE: ONE (1) COMPACTION TEST PER 400 SQUARE YARDS; ONE (1) GRADATION AND SAND EQUIVALENT TEST PER LIFT PER PROJECT;
      iii. AGGREGATE BASE COURSE: ONE (1) COMPACTION TEST PER 300 SQUARE YARDS; ONE (1) GRADATION AND SAND EQUIVALENT TEST PER LIFT PER PROJECT;
      iv. ASPHALT CONCRETE PAVEMENT OR ASPHALT TREATED BASE COURSE; THREE (3) A.C. CORES FOR THICKNESS AND DENSITY TESTS PER PROJECT;
      v. TRENCH BACKFILL MATERIAL: ONE (1) TEST FOR EACH 300 LINEAL FEET OF TRENCH PER LIFT OF MATERIAL.
   B. THE PROJECT SOILS ENGINEER SHALL SUBMIT ALL TESTING REPORTS TO COUNTY OF MAUI FOR REVIEW AND APPROVAL PRIOR TO COUNTY'S ACCEPTANCE OF WORK.
   C. THE PROJECT SOILS ENGINEER SHALL BE REQUIRED TO NOTIFY THE COUNTY OF ANY TESTING FAILURES. CONTRACTOR SHALL CORRECT EACH FAILURE PRIOR TO PROCEEDING TO THE NEXT PHASE OF CONSTRUCTION. NONCOMPLIANCE WILL REQUIRE REMOVAL OF ALL SUBSEQUENT WORK TO CORRECT THE AREA OF FAILURE. ALL COSTS OF RE-TESTING, REMOVAL AND RECONSTRUCTION, SHALL BE BORNE BY THE CONTRACTOR.
19. ALL EXISTING DRIVEWAYS SHALL BE KEPT OPEN UNLESS ALTERNATE MEANS OF INGRESS/EGRESS ARE PROVIDED TO THE SATISFACTION OF BOTH THE PROPERTY OWNER AND THE COUNTY.
20. WHERE PEDESTRIAN WALKWAYS EXIST, THEY SHALL BE MAINTAINED IN A SAFE AND PASSABLE CONDITION, OR ALTERNATE FACILITIES FOR PEDESTRIANS MUST BE CONSTRUCTED. ALL ALTERNATE FACILITIES TO BE ADA COMPLIANT. PEDESTRIAN CONNECTIVITY BETWEEN WALKWAYS AT INTERSECTIONS SHALL ALSO BE PROVIDED.
21. ALL WORK INCLUDING REPAIR OF DAMAGED PAVEMENT AND SHOULDERS SHALL BE INSPECTED AND APPROVED BY THE DEPARTMENT OF PUBLIC WORKS. ALL UNAPPROVED WORK SHALL BE CONSIDERED UNACCEPTABLE AND SHALL BE REWORKED AND CORRECTED AS DIRECTED BY THE DEPARTMENT OF PUBLIC WORKS, AT THE CONTRACTOR'S EXPENSE.
22. DURING NON-WORKING HOURS, ALL TRENCHES SHALL BE COVERED WITH A SAFE NON-SKID BRIDGING MATERIAL AND ALL LANES SHALL BE OPENED TO PUBLIC VEHICULAR AND PEDESTRIAN TRAFFIC.
23. NO MATERIAL AND/OR EQUIPMENT SHALL BE STOCKPILED OR OTHERWISE STORED WITHIN COUNTY RIGHT-OF-WAY EXCEPT AT LOCATIONS DESIGNED IN WRITING AND APPROVED BY THE COUNTY ENGINEER.
24. THE CONTRACTOR SHALL CONDUCT HIS OPERATIONS SO AS TO MINIMIZE OBSTRUCTIONS AND INCONVENIENCE TO THE PUBLIC AND HE SHALL HAVE UNDER CONSTRUCTION NO GREATER LENGTH OR AMOUNT OF WORK THAT HE CAN EXECUTE PROPERLY WITH DUE REGARD TO THE RIGHTS OF THE PUBLIC.

GENERAL SITEWORK:

1. ALL CONSTRUCTION WORK SHALL STRICTLY CONFORM TO THE PROJECT SPECIFICATIONS AND LATEST VERSION OF THE HAWAII STANDARD SPECIFICATIONS FOR ROAD AND BRIDGE CONSTRUCTION, AND THE SEPTEMBER 1984 "STANDARD DETAILS" FOR PUBLIC WORKS CONSTRUCTION OF THE DEPARTMENT OF PUBLIC WORKS, AS AMENDED.
2. EACH PHASE OF CONSTRUCTION IS TO BE APPROVED BY THE DP&R, PRIOR TO WORKING ON THE NEXT PHASE OF CONSTRUCTION.
3. THE LATEST REVISIONS OF THE STANDARD DETAIL DRAWINGS OF THE DEPARTMENT OF PUBLIC WORKS AND STANDARD SPECIFICATIONS FOR ROAD AND BRIDGE CONSTRUCTION SHALL BE INCLUDED AS PART OF THE CONSTRUCTION PLANS.
4. THE CONTRACTOR SHALL STRIPE STOP LINES, CROSSWALKS AND OTHER LINES, AS REQUIRED, AND SHALL INSTALL SIGNS IN ACCORDANCE WITH THE LATEST REVISIONS OF THE "MANUAL ON UNIFORM TRAFFIC CONTROL DEVICES FOR STREETS AND HIGHWAYS, DATED DECEMBER 2009."
5. THE CONTRACTOR SHALL PROVIDE, INSTALL AND MAINTAIN ALL NECESSARY SIGNS, LIGHTS, FLARES, BARRICADES, AND OTHER PROTECTIVE DEVICES FOR THE PROTECTION, SAFETY, AND CONVENIENCE OF THE PUBLIC, ALL IN ACCORDANCE WITH THE "MANUAL ON UNIFORM TRAFFIC CONTROL DEVICES FOR STREETS AND HIGHWAYS, DATED DECEMBER 2009."
6. BENCH MARKS SHALL BE ESTABLISHED AND CERTIFIED BY A LICENSED SURVEYOR REGISTERED IN THE STATE OF HAWAII, AND SUBMITTED TO THE DEVELOPMENT SERVICES ADMINISTRATION.
7. THE CONTRACTOR SHALL MAINTAIN A "JOB SITE COPY" OF THE PLANS AT THE PROJECT SITE WHICH WILL RECORD ANY CHANGES MADE IN THE FIELD. COMPLETE "AS-BUILT" DRAWINGS STAMPED BY THE CONTRACTOR SHALL BE SUBMITTED AS A CONDITION FOR FINAL ACCEPTANCE OF THE PROJECT.
8. ALL DIMENSIONS, GRADES, AND DETAILS SHOWN ON THE DRAWINGS SHALL BE CHECKED AND VERIFIED PRIOR TO THE START OF CONSTRUCTION, AND ANY DISCREPANCIES SHALL BE IMMEDIATELY BROUGHT TO THE ATTENTION OF THE ENGINEER FOR CLARIFICATION.
9. THE CONTRACTOR SHALL OBSERVE AND COMPLY WITH ALL FEDERAL, STATE, AND LOCAL LAWS REQUIRED FOR THE PROTECTION OF PUBLIC HEALTH AND SAFETY AND ENVIRONMENTAL QUALITY.
10. WHEN TRENCH EXCAVATION IS ADJACENT TO OR UNDER EXISTING STRUCTURES OR FACILITIES, THE CONTRACTOR SHALL BE RESPONSIBLE FOR PROPERLY SHEETING AND BRACING THE EXCAVATION AND STABILIZING THE EXISTING GROUND TO RENDER IT SAFE AND SECURE FROM POSSIBLE SLIDES, CAVE-INS AND SETTLEMENT, AND FOR PROPERLY SUPPORTING EXISTING STRUCTURES AND FACILITIES WITH BEAMS, STRUTS OR UNDERPINNINGS TO FULLY PROTECT IT FROM DAMAGE.
11. THE CONTRACTOR SHALL RESTORE ALL IMPROVEMENTS DAMAGED AS A RESULT OF THE CONSTRUCTION TO ITS ORIGINAL OR BETTER CONDITION.
12. SMOOTH RIDING CONNECTIONS SHALL BE CONSTRUCTED AT THE LIMITS OF NEW ROAD CONSTRUCTION, INCLUDING THE BEGINNING AND END OF PROJECT, CONNECTING APPROACHES, SIDE STREETS AND DRIVEWAYS AS SHOWN ON THE PLANS AND/OR AS DIRECTED BY THE ENGINEER.
13. ALL SAW CUTTING WORK SHALL BE CONSIDERED INCIDENTAL TO ROADWAY EXCAVATION. THE CONTRACTOR SHALL CLEAN UP ANY CUTTINGS AND SHALL NOT WASH DOWN MATERIAL INTO THE STORM DRAIN OR SEWER SYSTEMS.
14. ALL WORK SPECIFIED IN THE CONTRACT BUT NOT LISTED SEPARATELY IN THE PROPOSAL SCHEDULE SHALL BE CONSIDERED INCIDENTAL TO OTHER VARIOUS CONTRACT ITEMS AND SHALL NOT BE PAID FOR SEPARATELY.
15. ALL WORK TO REMOVE TEMPORARY FACILITIES BY THE CONTRACTOR SHALL BE CONSIDERED INCIDENTAL TO THE VARIOUS CONTRACT ITEMS IN THE PROPOSAL.
16. ALL NECESSARY PERMITS FOR WORK WITHIN THE JURISDICTION OF THE COUNTY OF MAUI AND THE STATE OF HAWAII SHALL BE OBTAINED BY THE CONTRACTOR AT HIS OWN COST.
17. THE CONTRACTOR SHALL NOTIFY THE ENGINEER AND COUNTY, INCLUDING BUS SYSTEMS DIVISION, POLICE DEPARTMENT, FIRE DEPARTMENT, EMERGENCY MEDICAL SERVICES, AND DEPARTMENT OF HEALTH IN WRITING AT LEAST FIVE (5) DAYS BEFORE START OF CONSTRUCTION.
18. A MINIMUM OF 36" CLEAR WIDTH AND 80" HEADROOM CLEARANCE HEIGHT SHALL BE MAINTAINED ALONG SIDEWALK AND POTENTIAL WALKWAYS.
19. THE CONTRACTOR SHALL PROVIDE FOR ACCESS TO AND FROM ALL EXISTING SIDE STREETS, DRIVEWAYS AND ADJACENT PROPERTIES AT ALL TIMES.
20. THE CONTRACTOR IN ADDITION TO ANY FENCING REQUIRED FOR DUST AND EROSION MITIGATION, SHALL INSTALL ANY REQUIRED FENCING, AND TO IMPLEMENT ANY OTHER MEASURES, TO PROVIDE A SAFE AND SECURE CONSTRUCTION SITE.
21. COMPACTION REQUIREMENTS:
   A. TESTING OF MATERIALS SHALL BE CONDUCTED BY A GEOTECHNICAL (SOILS) ENGINEER RETAINED BY THE DEPARTMENT OF PARKS AND RECREATION, TO PERFORM COMPACTION AND A.C. CORE TESTS IN ACCORDANCE WITH THE STANDARD COMPACTION REQUIREMENTS OF THE COUNTY OF MAUI, DPW & SHALL BE AN APPROVED INDEPENDENT TESTING AGENCY IN ACCORDANCE WITH ASTM STANDARD METHODS OR AS SPECIFIED BY THE DEPARTMENT OF PUBLIC WORKS, ENGINEERING DIVISION AS FOLLOWS:
      i. EMBANKMENT/SELECT BORROW AND SUBGRADE MATERIALS: ONE (1) COMPACTION TEST PER 600 SQUARE YARDS.
      ii. AGGREGATE SUBBASE COURSE: ONE (1) COMPACTION TEST PER 400 SQUARE YARDS; ONE (1) GRADATION AND SAND EQUIVALENT TEST PER PROJECT.
      iii. AGGREGATE BASE COURSE: ONE (1) COMPACTION TEST PER 300 SQUARE YARDS; ONE (1) GRADATION AND SAND EQUIVALENT TEST PER PROJECT PER LIFT OF MATERIAL.
      iv. ASPHALT CONCRETE PAVEMENT OR ASPHALT TREATED BASE COURSE: THREE (3) A.C. CORES FOR THICKNESS AND DENSITY TESTS PER PROJECT.
      v. TRENCH BACKFILL MATERIAL: ONE (1) TEST FOR EACH 300 LINEAL FEET OF TRENCH PER LIFT OF MATERIAL.
   B. CONTRACTOR SHALL SUBMIT ALL TESTING REPORTS INCLUDING RESULTS TO THE COUNTY'S INSPECTION AGENCY FOR REVIEW AND APPROVAL PRIOR TO COUNTY'S ACCEPTANCE OF WORK.
   C. THE CONTRACTOR SHALL BE REQUIRED TO NOTIFY THE COUNTY OF ANY TESTING FAILURES AND CORRECT EACH FAILURE PRIOR TO PROCEEDING TO THE NEXT PHASE OF CONSTRUCTION. NONCOMPLIANCE WILL REQUIRE REMOVAL OF ALL SUBSEQUENT WORK TO CORRECT THE AREA OF FAILURE. ALL COSTS OF REMOVAL, RECONSTRUCTION, AND RE-TESTING, TO THE SATISFACTION OF THE COUNTY, SHALL BE BORNE BY THE CONTRACTOR.
22. THE CONTRACTOR AT HIS OWN EXPENSE, SHALL KEEP THE PROJECT AND ITS SURROUNDING AREAS FREE FROM DUST NUISANCE. THE WORK SHALL BE IN CONFORMANCE WITH THE AIR POLLUTION STANDARDS AND REGULATIONS OF THE STATE DEPARTMENT OF HEALTH. THE COUNTY OF MAUI MAY REQUIRE SUPPLEMENTARY MEASURES AS NECESSARY.
23. PRIOR TO STARTING ANY EXCAVATION ACTIVITIES, THE CONTRACTOR SHALL CONTACT THE HAWAI'I ONE CALL CENTER AT 1-866-426-7287.
24. CONTRACTOR (INCLUDING SITEWORK CONTRACTOR AND ALL SUB-CONTRACTORS) SHALL BE EXPECTED TO COORDINATE EARTHWORK ACTIVITIES SUCH THAT ALL ROCK ALONG BUILDING FOUNDATIONS, FOOTINGS, UTILITY (INCLUDING IRRIGATION) TRENCHES, LANDSCAPING, ETC. SHALL BE OVER-EXCAVATED AND REMOVED AS REQUIRED, TO ALLOW ALL PROJECT IMPROVEMENTS TO BE PROPERLY INSTALLED AND COMPLETED (CONSISTENT WITH THE REQUIREMENTS IN THESE PROJECT SPECIFICATIONS AND THE SUBSURFACE INVESTIGATION REPORT; SOUTH MAUI COMMUNITY PARK AND GYMNASIUM; KIHEI, MAUI, HAWAII; DATED DECEMBER 30, 2004, AND ANY AMENDMENTS THERETO). THE PROJECT GEOTECHNICAL ENGINEER SHALL BE NOTIFIED PRIOR TO COMMENCING WITH BACKFILL AND COMPACTION OPERATION OF ANY OVER-EXCAVATED AREAS.

EXISTING UTILITIES:

1. THE LOCATION, DEPTH AND TYPE OF THE VARIOUS EXISTING UTILITY LINES SHOWN ON THE CONSTRUCTION PLANS WERE DETERMINED ON THE BASIS OF THE BEST INFORMATION AVAILABLE. THE CONTRACTOR SHALL VERIFY EXACT LOCATION, DEPTH AND TYPE PRIOR TO COMMENCEMENT OF WORK.
2. CONTRACTOR SHALL NOTIFY THE ENGINEER OF ANY DISCREPANCIES BETWEEN THE EXISTING UTILITIES AS SHOWN ON THE CONSTRUCTION PLANS AND IN GROUND, AND NOT PROCEED WITH ANY FURTHER WORK UNTIL WRITTEN NOTIFICATION IS RECEIVED FROM THE ENGINEER.
3. ALL EXISTING UTILITIES WHETHER OR NOT SHOWN ON PLANS SHALL BE PROTECTED AT ALL TIMES BY THE CONTRACTOR DURING CONSTRUCTION, AND IF DAMAGED DURING CONSTRUCTION BY THE CONTRACTOR, SHALL BE REPAIRED SOLELY AT HIS EXPENSE.
4. OVERHEAD AND UNDERGROUND UTILITIES MAY EXIST ALONG, ACROSS, AND IN THE VICINITY OF THE PROPOSED IMPROVEMENTS AND MAY NOT BE AS SHOWN ON THE PLANS. CONTRACTOR SHALL BE RESPONSIBLE FOR CONTACTING THE RESPECTIVE COUNTY OR STATE AGENCIES, UTILITIES (INCLUDING WITHOUT LIMITATION MAUI ELECTRIC COMPANY, LTD., VERIZON HAWAII INC., AND OCEANIC TIME WARNER CABLE OF HAWAII), EXAMINING ANY AVAILABLE RECORD DRAWINGS, TONING OF UNDERGROUND UTILITIES, TEST PITS, AND CONFIRMING THE PRESENCE, LOCATION, DEPTH, SIZE, & TYPE OF ANY EXISTING UTILITIES ALONG AND ACROSS THE PROPOSED IMPROVEMENTS. CONTRACTOR SHALL NOTIFY AND COORDINATE CONSTRUCTION ACTIVITIES, AND ANY REQUIRED RELOCATION, WITH RESPECTIVE AGENCIES AND UTILITIES.
5. CONTRACTOR SHALL PERFORM A THOROUGH FIELD INVESTIGATION AND ANY EXISTING ITEMS OR IMPROVEMENTS TO BE RETAINED (INCLUDING, BUT NOT LIMITED TO, HANDHOLES, MANHOLES, VALVES, VALVE BOXES, FIRE HYDRANTS, LIGHT POLES, METERS, METER BOXES, LANDSCAPE IRRIGATION, ETC.), WHETHER OR NOT SHOWN ON THE PLANS, SHALL BE ADJUSTED TO NEW FINISH GRADE.
6. CONTRACTOR SHALL CONTACT HAWAII ONE CALL CENTER AT 1-866-423-7287 TO APPLY FOR TONING REQUEST DUE TO EXISTING UNDERGROUND UTILITY FACILITIES BEFORE DIGGING, GRADING, OR EXCAVATING. ALLOW A MINIMUM 5 DAYS PRIOR NOTIFICATION OF TONING ONCE COMPLETED TONING REQUEST APPLICATION IS SUBMITTED.
7. WHEN WORKING OR OPERATING EQUIPMENT IN THE VICINITY OF OVERHEAD LINES OR GUY WIRES, CONTRACTOR SHALL MAINTAIN A MINIMUM OF 10'-0" RADIAL CLEARANCE. DO NOT EXCAVATE WITHIN 5'-0" OF EXISTING POLES/ANCHORS. CONTRACTORS SHALL CONTACT RESPECTIVE STATE, COUNTY OR UTILITY INSPECTORS, AS REQUIRED, A MINIMUM 72 HOURS PRIOR TO BE AVAILABLE TO INSPECT DURING EXCAVATION.

EXISTING GRADES:

1. EXISTING GRADES SHALL BE VERIFIED BY THE CONTRACTOR BEFORE PROCEEDING WITH GRADING WORK. SHOULD ANY DISCREPANCIES BE DISCOVERED IN THE EXISTING GRADES OR DIMENSIONS GIVEN ON THE PLANS, THE CONTRACTOR SHALL IMMEDIATELY NOTIFY THE ENGINEER BEFORE PROCEEDING FURTHER WITH ANY WORK, OTHERWISE HE WILL BE HELD RESPONSIBLE FOR ANY COST INVOLVED IN CORRECTION OF CONSTRUCTION PLACED DUE TO SUCH DISCREPANCIES.

ENVIRONMENTAL PROTECTION:

1. THE CONTRACTOR SHALL REMOVE ALL SILT AND DEBRIS RESULTING FROM HIS WORK AND DEPOSITED IN DRAINAGE FACILITIES, ROADWAYS AND OTHER AREAS. THE COSTS INCURRED FOR ANY NECESSARY REMEDIAL ACTION BY THE CHIEF ENVIRONMENTALIST SHALL BE BORNE BY THE CONTRACTOR.
2. THE CONTRACTOR SHALL KEEP THE PROJECT AREA AND SURROUNDING AREAS FREE FROM DUST NUISANCE, ALL IN ACCORDANCE WITH THE AIR POLLUTION CONTROL STANDARDS AND REGULATIONS OF THE STATE DEPARTMENT OF HEALTH. ALL COSTS SHALL BE BORNE BY THE CONTRACTOR.
3. ALL GRADING OPERATIONS SHALL BE PERFORMED IN CONFORMANCE WITH THE APPLICABLE PROVISIONS OF THE WATER POLLUTION CONTROL AND WATER QUALITY STANDARDS OF THE PUBLIC HEALTH REGULATIONS OF THE STATE DEPARTMENT OF HEALTH AND THE COUNTY'S GRADING ORDINANCE.
4. ALL CUT AND FILL SLOPES SHALL BE SODDED OR PLANTED IMMEDIATELY AFTER GRADING WORK HAS BEEN COMPLETED OR WITHIN 14 DAYS OF LAST DISTURBANCE.
5. CONSTRUCTION DEBRIS AND WASTES SHALL BE DEPOSITED AT APPROPRIATE SITES. THE CONTRACTOR SHALL INFORM THE OWNER OF THE LOCATION OF DISPOSAL SITES. THE DISPOSAL SITE SHALL ALSO FULFILL THE REQUIREMENTS OF THE GRADING ORDINANCE.
6. THE CONTRACTOR SHALL NOT DEMOLISH OR CLEAR ANY STRUCTURE, SITE, OR VACANT LOT WITHOUT FIRST ASCERTAINING THE PRESENCE OR ABSENCE OF RODENTS WHICH MAY ENDANGER THE PUBLIC HEALTH BY DISPERSAL FROM SUCH PREMISES. SHOULD SUCH INSPECTION REVEAL THE PRESENCE OF SUCH RODENTS, THE CONTRACTOR SHALL ERADICATE SUCH RODENTS BEFORE DEMOLISHING OR CLEARING SAID STRUCTURE, SITE OR VACANT LOT.
7. THE CONTRACTOR SHALL BE RESPONSIBLE FOR CONFORMANCE WITH THE APPLICABLE PROVISIONS OF THE WATER QUALITY AND WATER POLLUTION CONTROL STANDARDS CONTAINED IN THE HAWAII ADMINISTRATIVE RULES, TITLE 11, CHAPTER 54, "WATER QUALITY STANDARDS" AND TITLE 11, CHAPTER 55, "WATER POLLUTION CONTROL". BEST MANAGEMENT PRACTICES SHALL BE EMPLOYED AT ALL TIMES DURING THE CONSTRUCTION PERIOD.
8. THE CONTRACTOR SHALL OBTAIN A COPY OF; AND COMPLY WITH NATIONAL POLLUTION DISCHARGE ELIMINATION SYSTEM (NPDES) PERMIT (FILE NO. HI R10F129; FROM OWNER AND ITS REQUIREMENTS FOR THE PROJECT. THE CONTRACTOR SHALL NOT START CONSTRUCTION UNTIL NOTICE OF GENERAL PERMIT COVERAGE (NGPC) IS RECEIVED FROM THE DEPARTMENT OF HEALTH, STATE OF HAWAII AND HAS SATISFIED ANY OTHER APPLICABLE REQUIREMENTS OF THE NPDES PERMIT PROGRAM.

EROSION CONTROL:

THE FOLLOWING MEASURES SHALL BE TAKEN TO CONTROL EROSION DURING THE SITE DEVELOPMENT PERIOD:

1. MINIMIZE TIME OF CONSTRUCTION.
2. RETAIN EXISTING GROUND COVER UNTIL LATEST DATE TO COMPLETE CONSTRUCTION.
3. EARLY CONSTRUCTION OF DRAINAGE CONTROL FEATURES.
4. USE TEMPORARY AREA SPRINKLERS IN NON-ACTIVE CONSTRUCTION AREAS WHEN GROUND COVER IS REMOVED.
5. STATION WATER TRUCK ON SITE DURING CONSTRUCTION PERIOD TO PROVIDE FOR IMMEDIATE SPRINKLING, AS NEEDED, IN ACTIVE CONSTRUCTION ZONES (WEEKENDS AND HOLIDAYS INCLUDED).
6. USE TEMPORARY BERMS AND CUT-OFF DITCHES, WHERE NEEDED, FOR CONTROL OF EROSION.
7. GRADED AREAS SHALL BE THOROUGHLY WATERED AFTER CONSTRUCTION ACTIVITY HAS CEASED FOR THE DAY AND ON WEEKENDS.

WATER SYSTEM:

1. THE CONTRACTOR SHALL NOTIFY THE DEPARTMENT OF WATER SUPPLY (DWS) AND PARKS & RECREATION PLANNING DIVISION, IN WRITING, ONE (1) WEEK PRIOR TO COMMENCEMENT OF WORK.
2. ALL MATERIALS USED AND METHODS OF CONSTRUCTION OF WATER SYSTEM FACILITIES SHALL BE IN ACCORDANCE WITH THE LATEST REVISIONS OF DWS STANDARDS. CONTRACTOR SHALL OBTAIN THE LATEST REVISIONS OF THE DWS STANDARD DETAILS BEFORE COMMENCING CONSTRUCTION.
3. ALL WATER SYSTEM WORK SHALL BE PERFORMED BY CONTRACTORS POSSESSING VALID STATE OF HAWAII CONTRACTOR'S LICENSES, REGARDLESS OF THE VALUE OF THE WORK.
4. THE EXACT DEPTH AND LOCATION OF EXISTING WATERLINES, SERVICE LATERALS AND OTHER UTILITIES ARE NOT KNOWN. IT SHALL BE THE CONTRACTOR'S RESPONSIBILITY TO LOCATE SAME PRIOR TO TRENCHING FOR THE NEW WATERLINE. THE COST OF LOWERING, RELOCATING OR ADJUSTING EXISTING WATERLINES, SERVICE LATERALS AND OTHER UTILITIES SHALL BE CONSIDERED INCIDENTAL TO THE COST OF THE NEW WATERLINE, UNLESS NOTED OTHERWISE, AND WILL NOT BE PAID FOR SEPARATELY.
5. CONCRETE FOR REACTION BLOCKS AND ANCHOR BLOCKS SHALL BE DWS CLASS 2500.
6. THE MAXIMUM DISTANCE BETWEEN VALVE AND NUT AND TOP OF VALVE MANHOLE COVER SHALL BE THREE (3) FEET.
7. THE CONTRACTOR SHALL SUBMIT A MATERIALS LIST TO DWS AND DP&R FOR APPROVAL PRIOR TO CONSTRUCTION.
8. CONNECTION TO DWS SYSTEM:
   A. THE CONTRACTOR SHALL BE RESPONSIBLE FOR FURNISHING ALL NECESSARY FITTINGS AND OTHER MATERIALS AND EQUIPMENT REQUIRED FOR THE HOOK-UP. HE SHALL VERIFY THE EXACT LOCATION, DEPTH, TYPE, AND CONDITION OF THE EXISTING LINE BEFORE ORDERING MATERIALS FOR THE HOOK-UP. HE SHALL, HOWEVER, CHECK WITH DWS BEFORE EXCAVATING FOR VERIFICATION PURPOSES.
   B. WHENEVER FEASIBLE, MECHANICAL JOINT FITTINGS SHALL BE USED FOR BURIED APPLICATIONS, AND FLANGED JOINT FITTINGS SHALL BE USED FOR EXPOSED APPLICATIONS.
   C. AUTHORIZED DWS PERSONNEL MAY BE REQUIRED TO MAKE THE FINAL CONNECTION TO THE EXISTING LINE. THE CONTRACTOR SHALL BE RESPONSIBLE FOR ALL COSTS INCURRED BY DWS FOR SAID WORK, INCLUDING THE COST OF PRESSURE TESTING AND DISINFECTION.
   D. IF THE DWS PROVIDES ONLY INSPECTION AND SUPERVISING OPERATORS, AND DOES NOT PROVIDE PERSONNEL FOR THE ACTUAL CONNECTION, THE CONTRACTOR SHALL PROVIDE ALL PIPEFITTERS AND LABORS TO MAKE THE CONNECTION.
   E. THE CONTRACTOR SHALL BE RESPONSIBLE FOR FURNISHING ALL MATERIAL, EQUIPMENT AND LABOR FOR TRENCH EXCAVATION, BACKFILLING, CLEANING AND CHLORINATION, PAVING, AND OTHER WORK NECESSARY TO COMPLETE THE HOOK-UP, AS DIRECTED BY AND TO THE SATISFACTION OF DWS.
9. MINIMUM COVER OVER WATER MAIN, 6" DIAMETER OR LARGER, SHALL BE 3'-0". MINIMUM COVER FOR 4" DIAMETER SHALL BE 2'-6". MINIMUM COVER FOR DIAMETERS LESS THAN 4" SHALL BE 1'-6".
10. BOLTS FOR EXPOSED FLANGED DUCTILE IRON PIPE JOINTS SHALL BE EITHER SILICON BRONZE BOLTS AND NUTS OR 316 STAINLESS STEEL BOLTING WITH THE HEAVY DUTY STAINLESS STEEL NUTS (ONLY) FURNISHED WITH TRIPAC 2000 BLUE COATING SYSTEM. ANTI-SEIZE SHALL NOT BE USED. T-BOLTS FOR DUCTILE IRON MECHANICAL JOINT (MJ) PIPE AND FITTING CONNECTIONS IN UNDERGROUND SITUATIONS SHALL BE ONE OF THE FOLLOWING SYSTEMS:
   A. 316 STAINLESS STEEL T-BOLTS WITH THE HEAVY DUTY STAINLESS STEEL NUTS (ONLY) FURNISHED WITH TRIPAC 2000 BLUE COATING SYSTEM. ANTI-SEIZE SHALL NOT BE USED.
   B. COR-TEN T-BOLTS AND NUTS WITH HIGH GRADE ZINC SACRIFICIAL ANODES, EQUIVALENT TO "DURATRON" SACRIFICIAL "SAC-NUT" MODULES, INSTALLED ON THE NUTS FOR ALL STANDARD COR-TEN T-BOLTS.
   C. COR-TEN T-BOLTS AND NUTS BOTH FACTORY COATED WITH TRIPAC 2000 BLUE COATING SYSTEM BY "TRIPAC FASTENERS".

   ALL HOT FORGED STAINLESS STEEL BOLTS ARE REQUIRED TO BE PASSIVATED PER ASTM A380. MANUFACTURER CERTIFICATES ARE REQUIRED FOR PROOF WITH EACH SHIPMENT.
11. ALL BURIED METALS, INCLUDING COPPER PIPES, SHALL BE WRAPPED WITH POLY-WRAP. FOR ALL BURIED INSTALLATIONS OF DUCTILE IRON PIPE AND FITTINGS, POLY-WRAP IS REQUIRED EXCEPT WITHIN CONCRETE JACKETS.
12. LUBRICATE HYDRANT NOZZLE THREADS WITH NON-TOXIC GREASE.
13. THE CONTRACTOR SHALL PAINT AND NUMBER THE FIRE HYDRANT. NUMBERING TO BE FURNISHED BY DWS.
14. WATER MAINS AND APPURTENANCES SHALL BE SUBJECT TO HYDROSTATIC TESTING IN ACCORDANCE WITH THE LATEST REVISION OF AWWA C600, UNDER THE "HYDROSTATIC TESTING" SECTION, TO A PRESSURE OF AT LEAST 1.5 TIMES THE WORKING PRESSURE. UNLESS OTHERWISE STATED IN THE CONSTRUCTION DOCUMENTS OR LIMITED BY THE PRESSURE RATING OF EQUIPMENT, THE PRESSURE TEST AND LEAKAGE TEST SHALL BE PERFORMED AT 225 POUNDS PER SQUARE INCH PRESSURE.
15. THE DEVELOPER SHALL SUBMIT A COST LIST ALONG WITH AN AFFIDAVIT FOR THE WATER SYSTEM PRIOR TO ACCEPTANCE.
16. THE CONTRACTOR SHALL SUBMIT TWO SETS OF RECORD DRAWINGS VIA A CONSULTANT PRIOR TO ACCEPTANCE OF THE WATER SYSTEM. AN ELECTRONIC IMAGE FILE IN TIF FORMAT SHALL BE PROVIDED TO THE DWS FOR ALL PROJECTS.

CHLORINATION OF WATER SYSTEM PIPELINES:

1. WATER MAINS AND APPURTENANCES SHALL BE DISINFECTED IN ACCORDANCE WITH AWWA C651. ALL PROCEDURES AND MATERIALS (LIQUID CHLORINE OR CALCIUM HYPOCHLORITE) USED FOR THE CHLORINATION OF THE PROJECT SHALL CONFORM TO AWWA REQUIREMENTS.
2. PRIOR TO CHLORINATION, THE PROJECT PIPELINES SHALL BE THOROUGHLY CLEANED. CLEANING OF LINES 8" AND LARGER SHALL BE BY PIGGING USING FOAM PIGS. SMALLER LINES CAN BE FLUSHED IN ACCORDANCE WITH AWWA REQUIREMENTS IF ADEQUATE WATER SUPPLY IS PROVIDED, OTHERWISE BY PIGGING. THE CONTRACTOR SHALL SUBMIT HIS PLAN FOR PIPELINE CLEANING, INCLUDING FITTING REQUIREMENTS FOR PIGGING, FOR APPROVAL PRIOR TO PROCEEDING.
3. THE INTERIOR SURFACES OF THE PROJECT SHALL BE EXPOSED TO THE CHLORINATING SOLUTION FOR A MINIMUM OF 24 HOURS AND THE CHLORINE RESIDUAL SHALL NOT BE LESS THAN 10 PPM AFTER SUCH TIME.
4. SHOULD CALCIUM HYPOCHLORITE BE USED, NO SOLID AND/OR UNDISSOLVED PORTION OF THE COMPOUND SHALL BE INTRODUCED INTO ANY SECTION OF THE PROJECT TO BE CHLORINATED.
5. AT THE END OF THE 24-HOUR DISINFECTION PERIOD, REPRESENTATIVE SAMPLES SHALL BE TAKEN AND ANALYZED TO ASSURE A CHLORINE RESIDUAL OF AT LEAST 10 PPM. MEASUREMENTS FOR CHLORINE RESIDUAL TESTS SHALL BE BY A TRAINED, QUALIFIED TESTER APPROVED BY THE DIRECTOR.
6. SHOULD THE RESULTS INDICATE ADEQUATE CHLORINATION, THE PROJECT SHALL BE THOROUGHLY FLUSHED AND FILLED WITH POTABLE WATER FROM THE EXISTING POTABLE WATER SYSTEM AND AGAIN TESTED FOR CHLORINE RESIDUAL. THE FLUSHING SHALL BE CONSIDERED ADEQUATE IF THE TEST RESULTS INDICATE THAT THE WATER IN THE PROJECT HAS A COMPARABLE CHLORINE RESIDUAL AS THE WATER IN THE EXISTING SYSTEM.
7. FOLLOWING THE ACCEPTABLE FLUSHING OF THE HIGH CONCENTRATION CHLORINE SOLUTION, TWO CONSECUTIVE SETS OF ACCEPTABLE SAMPLES SHALL BE TAKEN AT LEAST 24 HOURS APART FROM REPRESENTATIVE POINTS IN THE PROJECT AND SUBJECTED TO MICROBIOLOGICAL TESTS PERFORMED BY A CERTIFIED LABORATORY APPROVED BY THE DEPARTMENT OF HEALTH. AT LEAST ONE SET OF SAMPLES SHALL BE COLLECTED AND TESTED FROM EVERY 1,200 FEET OF THE NEW WATER MAIN, PLUS ONE SET FROM THE END OF THE LINE AND AT LEAST ONE SET FROM EACH BRANCH. POSITIVE RESULTS WILL NOT BE ACCEPTABLE AND THE ENTIRE CHLORINATION PROCESS WILL BE REPEATED.
8. ANALYSIS FOR RESIDUAL CHLORINE SHALL BE MADE IN ACCORDANCE WITH "STANDARD METHODS FOR THE EXAMINATION OF WATER AND WASTEWATER", AMERICAN PUBLIC HEALTH ASSOCIATION, CURRENT EDITION.
9. MICROBIOLOGICAL TESTS SHALL BE MADE IN ACCORDANCE WITH "STANDARD METHODS FOR THE EXAMINATION OF WATER AND WASTEWATER", AMERICAN PUBLIC HEALTH ASSOCIATION, CURRENT EDITION.
10. THE CONTRACTOR SHALL BE RESPONSIBLE FOR ALL COSTS ASSOCIATED WITH ALL OF THE FOREGOING.

CLEARING AND GRUBBING:

1. NO CLEARING AND GRUBBING MATERIALS SHALL BE DEPOSITED IN COUNTY SANITARY LANDFILLS. CONTRACTOR SHALL MAKE THEIR OWN ARRANGEMENTS FOR SATISFACTORY DEPOSIT OF SAME.

CALL HAWAI'I UTILITY NOTIFICATION CENTER
1-866-423-7287
CALL 2-BUSINESS DAYS IN ADVANCE BEFORE YOU DIG, GRADE, OR EXCAVATE FOR THE MARKING OF UNDERGROUND MEMBER UTILITIES

OR

811 Know what's **below.** **Call** before you dig.

CLIFFORD N. MUKAI
LICENSED PROFESSIONAL ENGINEER
NO. 6667-C
HAWAII, U.S.A.

License Expires: April 30, 2018

SIGNATURE DATE

THIS WORK WAS PREPARED BY ME OR UNDER MY SUPERVISION AND CONSTRUCTION OF THIS PROJECT WILL BE UNDER MY OBSERVATION "AS DEFINED IN SECTION 16-115-2 OF THE HAWAII ADMINISTRATIVE RULES FOR PROFESSIONAL ENGINEERS, ARCHITECTS, LAND SURVEYORS AND LANDSCAPE ARCHITECTS"

REVISION	DESCRIPTION	DATE

WARREN S. UNEMORI ENGINEERING, INC.
CIVIL & STRUCTURAL ENGINEERS/LAND SURVEYORS
WELLS STREET PROFESSIONAL CENTER, SUITE 403
2145 WELLS STREET, WAILUKU, MAUI, HAWAII 96793

SOUTH MAUI COMMUNITY PARK RECREATION CENTER
PROJECT NO.: P12 / 012 TAX MAP KEY: (2) 2-2-02 : 42
Waiohuli - Keokea (Kihei), Makawao, Maui, Hawaii

TITLE CONSTRUCTION NOTES

DESIGNED BY: B.A.W.	CHECKED BY: C.N.M.	JOB NUMBER: 03031.30	SHEET: C2.03
DRAWN BY: D.P.T.	APPROVED BY: C.N.M.	DATE: Nov. 1, 2016	OF SHEETS
SCALE: AS NOTED			

V:\Projdata\03proj\03031.30 - South Maui Comm Park - Gymnasium (ADC)\dwg\conplans\notesht-00.dwg

11-01-2016 (BID SET)

CONSTRUCTION NOTES:

RECYCLED WATER IRRIGATION SYSTEM NOTES:

1. THE RECYCLED WATER IRRIGATION SYSTEM SHALL CONFORM TO ALL REQUIREMENTS OF "REUSE GUIDELINES, VOLUME II: RECYCLED WATER PROJECTS" BY THE DEPARTMENT OF HEALTH, STATE OF HAWAII, DATED JANUARY 2016 AND THE COUNTY OF MAUI'S RULES FOR RECLAIMED WATER SERVICE, DATED JUNE 1997, AND ANY CURRENT AMENDMENTS THERETO.
2. ALL NEW BURIED TRANSMISSION PIPING IN THE RECYCLED WATER SYSTEM, INCLUDING SERVICE LINES, VALVES, AND OTHER APPURTENANCES SHALL BE:
   A. COLORED PURPLE, SUGGESTED COLOR PANTONE 512 OR EQUAL, AND
   B. EMBOSSED OR BE INTEGRALLY STAMPED/MARKED "RECYCLED WATER – DO NOT DRINK", BE INSTALLED WITH PURPLE IDENTIFICATION TAPE, OR A PURPLE POLYETHYLENE WRAP, SUGGESTED COLOR PANTONE 512 OR EQUAL.
3. IRRIGATION HEADS SHALL BE COLORED PURPLE, HAVE A PURPLE COLLAR, OR INTEGRALLY STAMPED/EMBOSSED IDENTIFYING THE COMPONENT AS CONTAINING "RECYCLED WATER"
4. VALVE AND METER BOXES CONFORM TO THE "WATER SYSTEM STANDARDS", STATE OF HAWAII, 2002. ALL VALVE COVERS ON RECYCLED WATER LINES SHALL CONTAIN "RECYCLED WATER" INSCRIPTIONS ON THE TOP SURFACE, OR BE COLORED PURPLE, SUGGESTED COLOR PANTONE 512 OR EQUAL.
5. ALL PIPES, VALVES, BOXES, METERS, MARKERS, OR ANY OTHER RECYCLED WATER COMPONENT SHALL NOT CONTAIN THE WORDS "POTABLE", "DOMESTIC", "DRINKING", OR ANY OTHER WORDS IMPLYING POTABLE DRINKING WATER.
6. ALL DUCTILE IRON RECYCLED WATER MAIN LINES SHALL BE PRESSURE TESTED WITH WATER AND SHALL MAINTAIN A PRESSURE OF 225 PSI FOR A MINIMUM TIME PERIOD OF TWO HOURS. ALL PVC C900 RECYCLED WATER MAIN LINES SHALL BE PRESSURE TESTED WITH WATER AND SHALL MAINTAIN A PRESSURE OF 1.5 TIMES THE NORMAL WORKING PRESSURE FOR A MINIMUM TIME PERIOD OF TWO HOURS.
7. ALL RECYCLED WATER METERS SHALL BE A BADGER METER CO. TURBO METER WITH STRAINER OR APPROVED EQUAL. RECYCLED WATER METER TOTALIZER SHALL HAVE A PURPLE COLORED LID AND SHROUD.
8. HOSE BIBS SHALL NOT BE CONNECTED TO THE RECYCLED WATER SYSTEM UNLESS DONE SO USING A QUICK–COUPLER WITH LOCKING PURPLE CAP.
9. NOTIFICATION SIGNS INDICATING THAT RECYCLED WATER IS BEING USED SHALL BE POSTED AT CONSPICUOUS LOCATIONS THROUGHOUT THE PROJECT. THE SIGNS SHALL INDICATE BOTH IN WRITING AND PICTORIALLY THAT RECYCLED WATER IS NOT SUITABLE FOR DRINKING. THE LOCATION AND DETAIL OF THE SIGNS SHALL BE NOTED ON THE CONSTRUCTION PLANS AND SUBMITTED TO THE COUNTY AND STATE FOR APPROVAL.
10. RECYCLED WATER TRANSMISSION AND DISTRIBUTION MAINS SHALL HAVE A MINIMUM COVER OF 48" TO FINISH GRADE IN PAVED AREAS, AND 36" IN TO FINISH GRADE IN UNDEVELOPED AREAS.
11. RECYCLED WATER TRANSMISSION AND DISTRIBUTION MAINS SHALL HAVE A HORIZONTAL SEPARATION OF 5 FEET TO SEWERLINES, AND 3 FEET TO WATERLINES AND OTHER UTILITIES.
12. RECYCLED WATER TRANSMISSION AND DISTRIBUTION MAINS SHALL HAVE A VERTICAL CLEARANCE OF 12" TO WATERLINES, 18" TO SEWERLINES AND 6" TO ALL OTHER UTILITIES AT CROSSINGS. RECYCLED WATERLINES SHALL ALWAYS BE INSTALLED BELOW THE POTABLE WATERLINES, UNLESS APPROVED BY THE COUNTY.
13. AT NO TIME SHALL THERE BE A CONNECTION OF ANY KIND BETWEEN THE POTABLE WATER SYSTEM AND THE RECYCLED WATER SYSTEM.
14. WHEN A POTABLE WATER SYSTEM EXISTS ON THE PROPERTY, A BACKFLOW PREVENTER SHALL BE INSTALLED ON THE POTABLE WATER SUPPLY LINE PRIOR TO CONSTRUCTION OF THE RECYCLED WATER SYSTEM.
15. BEFORE CONSTRUCTION COMMENCES, THE CONTRACTOR SHALL SCHEDULE AND DOCUMENT A PRE–CONSTRUCTION MEETING WITH ALL AGENCIES HAVING UTILITIES AFFECTED BY THE WORK.
16. CONTRACTOR MUST HAVE A SITE SPECIFIC SPILL PREVENTION PLAN (SSSPP) APPROVED BY WWRD PRIOR TO RECYCLED WATER CONSTRUCTION, OR ANY WORK WITHIN FIVE (5) FEET OF AN EXISTING RECYCLED WATER SYSTEM.
17. BEFORE BACKFILLING TRENCHES FOR ALL RECYCLED WATER AND POTABLE WATER PIPE LINES, THE CONTRACTOR SHALL REQUEST AN INSPECTION FROM THE DEPARTMENT OF ENVIRONMENTAL MANAGEMENT TO VERIFY HORIZONTAL AND VERTICAL CLEARANCES BETWEEN THE LINES.
18. THE DEPARTMENT OF ENVIRONMENTAL MANAGEMENT, WASTEWATER RECLAMATION DIVISION AND DEPARTMENT OF PARKS & RECREATION, HAVE THE RIGHT TO STOP CONSTRUCTION SHOULD ANY WORK BE FOUND CONTRARY TO THE APPROVED PLANS AND SPECIFICATIONS, OR DETRIMENTAL TO PUBLIC INTEREST.
19. ALL EXISTING UTILITIES, WHETHER OR NOT SHOWN ON THE PLANS, IF DAMAGED DURING CONSTRUCTION, SHALL BE REPAIRED BY THE CONTRACTOR AND THE CONTRACTOR SHALL PAY ALL EXPENSES.
20. ALL BACKFILL FOR RECYCLED WATER LINE TRENCHES SHALL BE COMPACTED TO A MINIMUM OF 95% OF ITS MAXIMUM DENSITY.
21. AFTER THE INSTALLATION OF THE RECYCLED WATER LINE, THE LINE SHALL BE PRESSURE TESTED AS DESCRIBED IN NO. 6 ABOVE AND FLUSHED WITH WATER.
22. ALL WATER MAINS AND APPURTENANCES (BOTH POTABLE AND RECYCLED WATER) WITHIN THE PROPERTY SHALL BE SUBJECTED TO A CROSS–CONNECTION TEST TO DETERMINE IF CROSS–CONNECTIONS EXIST PRIOR TO OCCUPANCY OF THE PROJECT. CROSS– CONNECTION TESTING WILL BE CONDUCTED IN THE PRESENCE OF THE DESIGN ENGINEER AND COUNTY AND DEPARTMENT OF HEALTH INSPECTORS. START UP APPROVAL OF THE RECYCLED WATER SYSTEM IS CONDITIONAL UPON THE DEPARTMENT OF HEALTH RECEIVING A WRITTEN REPORT OF THE TEST RESULTS CONFIRMING THAT NO CROSS–CONNECTIONS EXIST. COPIES OF THE REPORT SHALL ALSO BE PROVIDED TO EACH RESPECTIVE PROJECT'S RECYCLED WATER SUPERVISOR, THE COUNTY OF MAUI'S WASTEWATER RECLAMATION DIVISION AND DEPARTMENT OF PARKS & RECREATION.
23. THE CONTRACTOR SHALL MAINTAIN A "JOB SITE COPY" OF THE PLANS AT THE PROJECT SITE WHICH WILL RECORD ANY CHANGES MADE IN THE FIELD. "AS–BUILT" DRAWINGS SHALL BE SUBMITTED AS A CONDITION FOR FINAL ACCEPTANCE OF THE PROJECT.
24. CONTRACTOR SHALL BE RESPONSIBLE FOR RECORDING THE GPS COORDINATES OF ALL BURIED AND CONCEALED WORK TO BE DEDICATED TO THE COUNTY, AND PROVIDE THE GPS DATA TO THE COUNTY PRIOR TO THE PROJECT'S FINAL ACCEPTANCE. AN ACCURATE GPS POINT EVERY (50) FEET ALONG THE MAIN LINE, AT UTILITY CROSSINGS, AND AT ANY INSTALLED APPURTENANCE (INCLUDING BUT NOT LIMITED TO MANHOLES, BENDS, CONCRETE JACKET, LATERAL CONNECTION, PIPE DEVIATIONS, CHANGE IN PIPE SIZE, CRITICAL JOINTS, ARV, ETC.). GPS DATA SHALL BE IN NAD 1983 STATE PLANE HAWAII ZONE 2 FIPS 5102 GRID, AND SHALL BE ACCURATE TO WITHIN ONE (1) FOOT. ACQUIRED GPS SURVEY DATA SHALL BE QUALITY CHECKED BY THE CONTRACTOR PRIOR TO SUBMISSION IN SHAPEFILE (.SHP) FORMAT, FOR COMPATIBILITY WITH MAINSTREAM GIS SOFTWARE SUCH AS ESRI ARCMAP.
25. BEFORE CONSTRUCTION OF THE IRRIGATION SYSTEM COMMENCES, THE STATE DEPARTMENT OF HEALTH, WASTEWATER BRANCH AND COUNTY OF MAUI'S WASTEWATER RECLAMATION DIVISION MUST APPROVE THE RECYCLED WATER IRRIGATION SYSTEM DESIGN.
26. PRIOR TO START–UP OF THE IRRIGATION SYSTEM AND OCCUPANCY OF PROPERTY, REPRESENTATIVES OF THE STATE DEPARTMENT OF HEALTH WASTEWATER BRANCH AND THE COUNTY OF MAUI'S WASTEWATER RECLAMATION DIVISION SHALL INSPECT THE RECYCLED WATER IRRIGATION SYSTEM ALONG WITH THE IRRIGATION SYSTEM CONTRACTOR AND PROJECT OWNER. ONCE THE IRRIGATION SYSTEM PASSES INSPECTION, PERMITS FOR RECYCLED WATER USE SHALL BE ISSUED TO THE OWNER BY EACH ENTITY.
27. DRIP LINES SHALL HAVE A PURPLE PANTONE 512 STRIP.
28. QUICK COUPLERS SHALL HAVE A PURPLE PANTONE 512 COVER AND EMBOSSED OR BE INTEGRALLY STAMPED/MARKED "RECYCLED WATER – DO NOT DRINK".
29. SHOULD THE CONTRACTOR EXCAVATE BEYOND THE TRENCH PAYMENT WIDTH, AS SPECIFIED IN THE STANDARD DETAILS FOR PUBLIC WORKS CONSTRUCTION, DATED SEPTEMBER 1984, AND SUCH ACTION RESULTS IN A GREATER LOAD TO THE PIPE, THE CONTRACTOR SHALL PROVIDE, AT THE CONTRACTOR'S EXPENSE, A HIGHER CLASS OF BEDDING MATERIAL THAT WILL WITHSTAND THE ADDED LOAD.
30. WHERE THE CLEARANCE BETWEEN A SEWER OR RECYCLED WATER LINE AND A NEW OR EXISTING WATER LINE IS 18 INCHES OR LESS, THE SEWER LINE OR RECYCLED WATER LINE SHALL BE CONCRETE JACKETED IN ACCORDANCE WITH THE STANDARD DETAILS FOR PUBLIC WORKS CONSTRUCTION, DATED SEPTEMBER 1984.
31. ALL ABOVE GROUND EXISTING AND NEW FACILITIES SHALL BE CONSISTENTLY COLOR CODED PURPLE, SUGGESTED COLOR INDEX 77742 VIOLET #16, PANTONE 512, OR EQUAL AND MARKED TO DIFFERENTIATE RECYCLED WATER APPURTENANCES FROM POTABLE WATER OR WASTEWATER.
32. ALL SEWER LINES AND APPURTENANCES SHALL CONFORM TO THE STANDARD SPECIFICATIONS AND DETAILS OF THE DEPARTMENT OF PUBLIC WORKS, COUNTY OF MAUI.
33. ALL SEWER LINES AND APPURTENANCES SHALL FOLLOW THE DESIGN STANDARDS OF THE DEPARTMENT OF WASTEWATER MANAGEMENT, CITY AND COUNTY OF HONOLULU, VOLUMES 1 AND 2, JULY 1993, UNLESS OTHERWISE NOTED.
34. PRIOR TO INSTALLATION OF FLOW METER AND FINAL ACCEPTANCE, ALL EFFLUENT LINES INSTALLED SHALL BE FLUSHED WITH REUSE WATER AND ANY ACCUMULATED CONSTRUCTION DEBRIS AND OTHER FOREIGN MATERIALS SHALL BE REMOVED.
35. WHERE REQUIRED, PURPLE IDENTIFICATION TAPE BE PLACED 12" ABOVE PIPE OR ON THE TOP OF PIPE CUSHION.
36. ALL SEWER MANHOLES, RECLAIMED WATER MANHOLES, VALVES ETC. SHALL BE EXPOSED AND RAISED TO GRADE WITHIN 5 DAYS OF PAVING.
37. WWRD SHOULD BE NOTIFIED (270–7417) AT LEAST 2 WORKING DAYS PRIOR TO ANY CONSTRUCTION THAT WILL EXPOSE WASTEWATER OR RECLAIMED WATER LINES.
38. NOTE THAT THE CONTRACTOR WILL BE LIABLE FOR ANY FINE IMPOSED BY EPA OR THE STATE DEPARTMENT OF HEALTH DUE TO A WASTEWATER SPILL RESULTING FROM CONSTRUCTION DAMAGE. THE CONTRACTOR SHALL IMMEDIATELY NOTIFY WWRD–COLLECTIONS (243–7465) IN THE EVENT OF DAMAGE TO THE WASTEWATER LINES OR A WASTEWATER SPILL.

WASTEWATER NOTES:

1. ALL WASTEWATER LINES AND APPURTENANCES SHALL CONFORM TO STANDARD DETAILS FOR PUBLIC WORKS CONSTRUCTION, DATED SEPTEMBER 1984, OF THE DEPARTMENT OF PUBLIC WORKS, COUNTY OF MAUI.
2. ALL SEWERLINE AND APPURTENANCES SHALL FOLLOW THE DESIGN STANDARDS OF THE WASTEWATER RECLAMATION DIVISION, CITY AND COUNTY OF HONOLULU, VOLUMES 1 & 2, DATED JULY 1993 AND JULY 1984 RESPECTIVELY, UNLESS OTHERWISE NOTED.
3. BEFORE CONSTRUCTION COMMENCES, THE CONTRACTOR SHALL SCHEDULE AND DOCUMENT A PRE–CONSTRUCTION MEETING WITH ALL AGENCIES HAVING UTILITIES AFFECTED BY THE WORK.
   A. THE CONTRACTOR SHALL NOTIFY WWRD INSPECTOR, PAUL MORIOKA AT 270–7417 AND DEPARTMENT OF PARKS & RECREATION, FIVE (5) DAYS PRIOR TO THE START OF CONSTRUCTION TO INFORM HIM OF THE INSTALLATION SCHEDULE.
4. THE DEPARTMENT OF ENVIRONMENTAL MANAGEMENT, WASTEWATER RECLAMATION DIVISION, HAS THE RIGHT TO STOP CONSTRUCTION, SHOULD ANY WORK BE FOUND CONTRARY TO THE APPROVED PLANS AND SPECIFICATIONS, OR DETRIMENTAL TO THE PUBLIC INTEREST.
5. ALL EXISTING WASTEWATER LINES, WHETHER OR NOT SHOWN ON THE PLANS, IF DAMAGED DURING CONSTRUCTION, SHALL BE REPAIRED BY THE CONTRACTOR AND THE CONTRACTOR SHALL PAY ALL EXPENSES.
6. THE CONTRACTOR SHALL NOTIFY THE WASTEWATER RECLAMATION DIVISION ONE (1) WEEK PRIOR TO CONNECTION TO ANY EXISTING WASTEWATER LINES.
7. SHOULD THE CONTRACTOR EXCAVATE BEYOND THE TRENCH PAY–WIDTH, AS SPECIFIED IN THE STANDARD DETAILS FOR PUBLIC WORKS CONSTRUCTION, DATED SEPTEMBER 1984, AND SUCH ACTION RESULTS IN A GREATER LOAD TO THE PIPE, THE CONTRACTOR SHALL PROVIDE, AT THE CONTRACTOR'S EXPENSE, A HIGHER CLASS OF BEDDING MATERIAL THAT WILL WITHSTAND THE ADDED LOAD.
8. WASTEWATER LATERALS SHALL BE SIX (6) INCHES IN DIAMETER AT A MINIMUM OF 2% SLOPE, UNLESS APPROVED OTHERWISE.
9. AN ADVANCE RISER CONNECTION SHALL BE INSTALLED AT EACH NEW WASTEWATER LATERAL.
10. WHERE THE CLEARANCE BETWEEN A WASTEWATER LINE AND A NEW OR EXISTING UTILITY LINE IS EIGHTEEN (18) INCHES OR LESS, THE WASTEWATER LINE SHALL BE CONCRETE JACKETED IN ACCORDANCE WITH THE STANDARD DETAILS OF PUBLIC WORKS CONSTRUCTION, DATED SEPTEMBER 1984.
11. WHEN THE WASTEWATER MAINS ARE OF A DIFFERENT MATERIAL THAN THE LATERALS, THE CONTRACTOR SHALL INSTALL APPROVED ADAPTERS.
12. ALL BACKFILL FOR WASTEWATER TRENCHES SHALL BE COMPACTED IN ONE (1) FOOT LIFTS TO A MINIMUM OF 95% OF ITS MAXIMUM DENSITY.
13. WHERE CONSTRUCTION IS TO BE DONE IN PHASES OR INCREMENTS, EACH PHASE OR INCREMENT SHALL BE APPROVED BY WASTEWATER RECLAMATION DIVISION AND DEPARTMENT OF PARKS & RECREATION BEFORE THE NEXT PHASE OR INCREMENT IS STARTED.
14. ALL WASTEWATER MAINS SHALL PASS A MANDREL TEST AS A CONDITION OF ACCEPTANCE 30 DAYS AFTER COMPLETION AND BACKFILL. THE MANDREL DIAMETER SHALL BE 95% OR MORE OF THE INSIDE DIAMETER OF THE PIPE BEING TESTED. A CERTIFICATION LETTER FROM THE CONTRACTOR, SIGNED BY THE DSA INSPECTOR, WILL BE FORWARDED TO THE WASTEWATER RECLAMATION DIVISION AND DEPARTMENT OF PARKS & RECREATION.
15. PRIOR TO INSPECTION BY CLOSED CIRCUIT TELEVISION (CCTV), ALL WASTEWATER LINES INSTALLED, INCLUDING LATERALS, SHALL BE FLUSHED WITH WATER AND ANY ACCUMULATED CONSTRUCTION DEBRIS AND OTHER FOREIGN MATERIALS SHALL BE REMOVED.
16. "AS–BUILT" DRAWINGS SHALL BE SUBMITTED AS A CONDITION FOR THE FINAL ACCEPTANCE OF THE PROJECT. IF MAIN TRANSMISSION LINES WILL BE DEDICATED TO THE COUNTY, THE CONTRACTOR SHALL ALSO SUBMIT GIS SHAPE FILE LAYER FILES (SHAPEFILE DATA IN NAD83 STATE PLANE ZONE 2 METERS) TO THE WASTEWATER RECLAMATION DIVISION.
17. ALL MAIN WASTEWATER LINES WHICH WILL BE DEDICATED TO THE COUNTY OF MAUI SHALL BE INSPECTED BY CCTV IN STRICT ACCORDANCE WITH DEPARTMENT OF PUBLIC WORKS CCTV POLICY, EFFECTIVE DATE JULY 5, 2001. FINAL ACCEPTANCE OF THE SYSTEM SHALL BE CONTINGENT UPON THE PASSING OF ALL REQUIREMENTS OF THIS POLICY. CCTV RESULTS SHOULD BE SUBMITTED ON DVD PER MEMO DATED OCTOBER 1, 2006.
18. ANY CONNECTION MADE UNDER THE WATER TABLE WILL REQUIRE CCTV AT HIGH TIDE TO DETERMINE WATER TIGHTNESS IN ACCORDANCE WITH DEPARTMENT OF PUBLIC WORKS CCTV POLICY, EFFECTIVE DATE JULY 5, 2001. FINAL ACCEPTANCE OF THE SYSTEM SHALL BE CONTINGENT UPON THE PASSING OF ALL REQUIREMENTS OF THIS POLICY.
19. CONTRACTOR MUST HAVE A SITE SPECIFIC SPILL PREVENTION PLAN (SSSPP) APPROVED BY WWRD PRIOR TO THE APPROVAL OF THE WORK TO PERFORM ON ROADWAY PERMIT AND ANY SEWER LINE CONSTRUCTION AND/OR SEWER LATERAL CONNECTION TO EXISTING FACILITIES, OR ANY WORK WITHIN FIVE (5) FEET OF WASTEWATER SYSTEM IMPROVEMENTS.
20. IF THE CLEARANCE BETWEEN A WASTEWATER LINE AND A NEW OR EXISTING WATERLINE IS EIGHTEEN INCHES (18") OR LESS, THE WASTEWATER LINE SHALL BE CONCRETE–JACKETED IN ACCORDANCE WITH THE STANDARD DETAILS OF PUBLIC WORKS CONSTRUCTION DATED SEPTEMBER 1984.

WATER POLLUTION AND EROSION CONTROL NOTES

1. GENERAL:
   A. THE CONTRACTOR SHALL COMPLY WITH THE REQUIREMENTS OF SECTION 209–WATER POLLUTION AND EROSION CONTROL, IN THE "HAWAI'I STANDARD SPECIFICATIONS FOR ROAD AND BRIDGE CONSTRUCTION 2005" AND ITS AMENDMENTS. SECTION 209 DESCRIBES BUT IS NOT LIMITED TO: SUBMITTAL REQUIREMENTS; SCHEDULING OF A WATER POLLUTION AND EROSION CONTROL CONFERENCE WITH THE ENGINEER; CONSTRUCTION REQUIREMENTS; METHOD OF MEASUREMENT; AND BASIS OF PAYMENT. NO WORK SHALL COMMENCE WITHOUT A BMP PLAN APPROVED BY THE DEPARTMENT OF HEALTH.
   B. THE CONTRACTOR SHALL FOLLOW THE GUIDELINES IN THE CURRENT CITY AND COUNTY OF HONOLULU "STORM WATER BEST MANAGEMENT PRACTICE MANUAL," DATED NOVEMBER 2011 AND THE EPA'S CURRENT BEST MANAGEMENT PRACTICES IN DEVELOPING, INSTALLING AND MAINTAINING THE BEST MANAGEMENT PRACTICES (BMPS) FOR THE PROJECT. WHERE THE GUIDELINES DIFFER, THE MOST STRINGENT CRITERIA SHALL GOVERN, UNLESS OTHERWISE APPROVED BY THE ENGINEER.
   C. THE CONTRACTOR SHALL KEEP A COPY OF THE APPROVED BMP, NOI, ETC. ON THE PROJECT SITE. THE BMP SHALL BE UPDATED TO REFLECT ANY CHANGES MADE DURING THE COURSE OF CONSTRUCTION FOR THE DURATION OF THE PROJECT.
   D. THE ENGINEER MAY ASSESS LIQUIDATED DAMAGES OF UP TO $27,500 FOR NON–COMPLIANCE OF EACH BMP REQUIREMENT AND EACH REQUIREMENT STATED IN SECTION 209, FOR EVERY DAY OF NON–COMPLIANCE. THERE IS NO MAXIMUM LIMIT ON THE AMOUNT ASSESSED PER DAY.
   E. THE ENGINEER MAY DEDUCT THE COST FROM THE PROGRESS PAYMENT FOR ALL CITATIONS RECEIVED BY THE OWNER FOR NON COMPLIANCE, OR THE CONTRACTOR SHALL REIMBURSE THE OWNER FOR THE FULL AMOUNT OF THE OUTSTANDING COST INCURRED BY THE OWNER, WHICHEVER IS GREATER.
   F. IN ACCORDANCE WITH CHAPTER 11–60.1, AIR POLLUTION CONTROL, TITLE 11, HAWAI'I ADMINISTRATIVE RULES, THE CONTRACTOR SHALL BE RESPONSIBLE FOR ENSURING THAT EFFECTIVE CONTROL MEASURES ARE PROVIDED TO MINIMIZE OR PREVENT ANY VISIBLE DUST EMISSION CAUSED BY THE CONSTRUCTION WORK FROM IMPACTING THE SURROUNDING AREAS INCLUDING THE OFF–SITE ROADWAYS USED TO ENTER/EXIT THE PROJECT. THESE MEASURES INCLUDE BUT ARE NOT LIMITED TO THE USE OF WATER WAGONS, SPRINKLER SYSTEMS, DUST FENCES, ETC.
   G. IN ACCORDANCE WITH CHAPTER 11–55, WATER POLLUTION CONTROL AND CHAPTER 11–54, WATER QUALITY STANDARDS, TITLE 11, HAWAI'I ADMINISTRATIVE RULES, THE CONTRACTOR SHALL BE RESPONSIBLE FOR ENSURING THAT THE BEST MANAGEMENT PRACTICE (BMP) TO PREVENT THE DISCHARGE OF SEDIMENTS, DEBRIS AND OTHER WATER POLLUTANTS INTO STATE WATERS IS PROVIDED AT ALL TIMES.
   H. IN ACCORDANCE WITH CHAPTER 11–58, SOLID WASTE MANAGEMENT CONTROL, TITLE 11, HAWAI'I ADMINISTRATIVE RULES, THE CONTRACTOR SHALL BE RESPONSIBLE FOR ENSURING THE GRUB MATERIAL, DEMOLITION WASTE AND CONSTRUCTION WASTE GENERATED BY THE PROJECT ARE DISPOSED OF IN A MANNER OR AT A SITE APPROVED BY THE STATE DEPARTMENT OF HEALTH. DISPOSAL OF ANY OF THESE WASTES BY BURNING IS PROHIBITED. THE CONTRACTOR SHALL INFORM THE COUNTY ENGINEER AS TO THE LOCATION OF THE DISPOSAL SITE(S). THE DISPOSAL SITE MUST ALSO FULFILL THE REQUIREMENTS OF THE GRADING ORDINANCES.
   I. IN ACCORDANCE WITH CHAPTER 11–46, COMMUNITY NOISE CONTROL, HAWAI'I ADMINISTRATIVE RULES, THE CONTRACTOR SHALL BE RESPONSIBLE FOR PROVIDING EFFECTIVE CONTROL MEASURES TO MINIMIZE OR PREVENT CONSTRUCTION RELATED NOISE FROM IMPACTING THE RESIDENTS IN THE IMMEDIATE AREA. IF REQUIRED, NOISE REDUCTION MEASURES SHALL BE IMPLEMENTED BY THE CONTRACTOR DURING THE CONSTRUCTION WORK.

WASTE DISPOSAL:

A. WASTE MATERIALS: ALL WASTE MATERIALS SHALL BE COLLECTED AND STORED IN A SECURELY LIDDED METAL DUMPSTER THAT DOES NOT LEAK. THE DUMPSTER SHALL MEET ALL LOCAL AND STATE SOLID WASTE MANAGEMENT REGULATIONS. ALL TRASH AND CONSTRUCTION DEBRIS FROM THE SITE SHALL BE DEPOSITED IN THE DUMPSTER. THE DUMPSTER SHALL BE EMPTIED A MINIMUM OF TWICE PER WEEK OR AS OFTEN AS IS DEEMED NECESSARY. NO CONSTRUCTION WASTE MATERIALS SHALL BE BURIED ONSITE. THE CONTRACTOR'S SUPERVISORY PERSONNEL SHALL BE INSTRUCTED REGARDING THE CORRECT PROCEDURE FOR WASTE DISPOSAL. NOTICES STATING THESE PRACTICES SHALL BE POSTED IN THE OFFICE TRAILER AND THE CONTRACTOR SHALL BE RESPONSIBLE FOR SEEING THAT THESE PROCEDURES ARE FOLLOWED.
B. HAZARD WASTE: ALL HAZARDOUS WASTE MATERIALS SHALL BE DISPOSED OF IN THE MANNER SPECIFIED BY LOCAL OR STATE REGULATION AND BY THE MANUFACTURER. THE CONTRACTOR'S SITE PERSONNEL SHALL BE INSTRUCTED IN THESE PRACTICES AND SHALL BE RESPONSIBLE FOR SEEING THAT THESE PRACTICES ARE FOLLOWED.
C. SANITARY WASTE: ALL SANITARY WASTE SHALL BE COLLECTED FROM THE PORTABLE UNITS A MINIMUM OF ONCE PER WEEK, OR AS REQUIRED.

3. EROSION AND SEDIMENT CONTROL INSPECTION AND MAINTENANCE PRACTICES:
   A. ALL CONTROL MEASURES SHALL BE INSPECTED AT LEAST ONCE EACH WEEK AND WITHIN 24 HOURS FOLLOWING ANY RAINFALL EVENT OF 0.5 INCHES OR GREATER.
   B. ALL MEASURES SHALL BE MAINTAINED IN GOOD WORKING ORDER. IF REPAIR IS NECESSARY, IT SHALL BE INITIATED WITHIN 24 HOURS AFTER THE INSPECTION.
   C. BUILT UP SEDIMENT SHALL BE REMOVED FROM SILT FENCE WHEN IT HAS REACHED ONE–THIRD THE HEIGHT OF THE FENCE.
   D. SILT SCREEN OR FENCE SHALL BE INSPECTED FOR DEPTH OF SEDIMENT, TEARS, TO VERIFY THAT THE FABRIC IS SECURELY ATTACHED TO THE FENCE POSTS OR CONCRETE SLAB AND TO VERIFY THAT THE FENCE POSTS ARE FIRMLY IN THE GROUND. THE BOTTOM OF THE SILT SCREEN SHALL BE INSPECTED AND VERIFIED THAT IT IS BURIED A MINIMUM OF 6 INCHES BELOW THE EXISTING GROUND.
   E. TEMPORARY AND PERMANENT SEEDING AND PLANTING SHALL BE INSPECTED FOR BARE SPOTS, WASH OUTS AND HEALTHY GROWTH.
   F. THE CONTRACTOR SHALL PROMPTLY SUBMIT TO THE ENGINEER A MAINTENANCE INSPECTION REPORT WITHIN ONE WEEK AFTER EACH WEEKLY INSPECTION. THE REPORT SHALL ALSO INCLUDE ANY CHANGES IN THE SITE SPECIFIC BMP, INCLUDING THE DISCONTINUANCE OF ANY BMP AND THE DATE IT WAS DISCONTINUED OR MODIFIED.
   G. THE CONTRACTOR SHALL SELECT A SPECIFIC INDIVIDUAL PERSONNEL WHO SHALL BE RESPONSIBLE FOR INSPECTIONS, MAINTENANCE AND REPAIR ACTIVITIES AND FILLING OUT THE INSPECTION AND MAINTENANCE REPORT.
   H. PERSONNEL SELECTED FOR THE INSPECTION AND MAINTENANCE RESPONSIBILITIES SHALL RECEIVE TRAINING FROM THE CONTRACTOR. THEY SHALL BE TRAINED IN ALL THE INSPECTION AND MAINTENANCE PRACTICES NECESSARY FOR KEEPING THE EROSION AND SEDIMENT CONTROLS USED ONSITE IN GOOD WORKING ORDER.
   I. ALL SLOPES AND EXPOSED AREAS SHALL BE GRASSED AS FINAL GRADES HAVE BEEN ESTABLISHED, GRADING TO FINAL GRADE SHALL BE CONTINUOUS, AND ANY AREA IN WHICH WORK HAS BEEN INTERRUPTED OR DELAYED OR EXPOSED FOR MORE THAN 15 DAYS SHALL BE GRASSED IN ORDER TO PREVENT DUST, EROSION AND SILT RUNOFF. AREAS WITH IMPORTED SOILS SHALL BE GRASSED NOT MORE THAN 5 WORKING DAYS AFTER FINAL GRADES HAVE BEEN ESTABLISHED.
   J. TEMPORARY EROSION CONTROLS SHALL NOT BE REMOVED BEFORE PERMANENT EROSION CONTROLS ARE IN–PLACE AND FULLY ESTABLISHED.
   K. BEST MANAGEMENT PRACTICES (BMP'S) SHALL BE EMPLOYED AT ALL TIMES TO THE MAXIMUM EXTENT PRACTICABLE TO PREVENT DAMAGE BY SEDIMENTATION, EROSION OR DUST TO STREAMS, WATERCOURSES, NATURAL AREAS AND THE PROPERTY OF OTHERS.
   L. PROVIDE AT ALL LOCATIONS WHERE VEHICLES ENTER ONTO THE ROADWAY FROM AN UNPAVED AREA, A STABILIZED CONSTRUCTION ENTRANCE TO REDUCE VEHICLE TRACKING OF SEDIMENTS. INCLUDE STABILIZED CONSTRUCTION ENTRANCE IN THE WATER POLLUTION, DUST, AND EROSION CONTROL SUBMITTALS. MINIMUM LENGTH SHOULD BE 50 FEET. MINIMUM WIDTH SHOULD BE 30 FEET. MINIMUM DEPTH SHOULD BE 12 INCHES AND UNDERLAIN WITH GEOTEXTILE FABRIC. MODIFY THE STABILIZED CONSTRUCTION ENTRANCE AS NEEDED TO ELIMINATE MINOR TRACKING OF MATERIAL ONTO THE ROADWAY FOR MORE THAN 50 FEET. THE PAVED STREET ADJACENT TO THE SITE SHALL BE CLEANED IMMEDIATELY TO REMOVE ANY EXCESS MUD, COLD PLANED MATERIALS, DIRT OR ROCK TRACKED FROM THE SITE. DUMP TRUCKS HAULING MATERIAL FROM THE CONSTRUCTION SITE SHALL BE COVERED WITH TARPAULIN.
   M. INCLUDE DESIGNATED CONCRETE WASHOUT AREA(S) IN THE WATER POLLUTION, DUST, AND EROSION CONTROL SUBMITTALS.
   N. THE CONTRACTOR SHALL CONTAIN, REMOVE AND DISPOSE OF SLURRY GENERATED FROM SAWCUTTING OF PAVEMENT IN ACCORDANCE WITH APPROVED BMP PRACTICES. PAYMENT FOR CONFINEMENT, REMOVAL, AND DISPOSAL OF SLURRY SHALL BE CONSIDERED INCIDENTAL TO THE VARIOUS CONTRACT ITEMS.
4. GOOD HOUSEKEEPING BEST MANAGEMENT PRACTICES:

MATERIALS POLLUTION PREVENTION PLAN:

A. ALL APPLICABLE MATERIALS OR SUBSTANCES EXPECTED TO BE PRESENT ONSITE DURING CONSTRUCTION SHALL BE ADDED TO THE INVENTORY OF THE CONSTRUCTION CONTRACTOR'S SITE–SPECIFIC BMP PLAN. SOME EXAMPLES ARE LISTED BELOW:

CONCRETE	FERTILIZERS
DETERGENTS	PETROLEUM BASED PRODUCTS
PAINTS (ENAMEL AND LATEX)	CLEANING SOLVENTS
METAL STUDS	WOOD
TAR	MASONRY BLOCK

B. MATERIAL MANAGEMENT PRACTICES SHALL BE USED TO REDUCE THE RISK OF SPILLS OR OTHER ACCIDENTAL EXPOSURE OF MATERIALS AND SUBSTANCES TO STORM WATER RUNOFF. AN EFFORT SHALL BE MADE TO STORE ONLY ENOUGH PRODUCTS AS IS REQUIRED TO DO THE JOB.
C. ALL MATERIALS STORED ONSITE SHALL BE STORED IN A NEAT, ORDERLY MANNER IN THEIR APPROPRIATE CONTAINERS AND IF POSSIBLE UNDER A ROOF OR OTHER ENCLOSURE.
D. PRODUCTS SHALL BE KEPT IN THEIR ORIGINAL CONTAINERS WITH THE ORIGINAL MANUFACTURER'S LABEL.
E. SUBSTANCES SHALL BE MIXED WITH ONE ANOTHER UNLESS RECOMMENDED BY THE MANUFACTURER.
F. A PRODUCT SHALL BE USED UP COMPLETELY BEFORE DISPOSING OF THE CONTAINER.
G. MANUFACTURER'S RECOMMENDATIONS FOR PROPER USE AND DISPOSAL SHALL BE FOLLOWED.
H. THE CONTRACTOR SHALL CONDUCT A DAILY INSPECTION TO ENSURE PROPER USE AND DISPOSAL OF MATERIALS ONSITE. SUBMIT THE INSPECTION REPORTS TO THE ENGINEER ON A WEEKLY BASIS.

HAZARDOUS MATERIAL POLLUTION PREVENTION PLAN:

A. PRODUCTS SHALL BE KEPT IN ORIGINAL CONTAINERS UNLESS THEY ARE NOT RESEALABLE.
B. ORIGINAL LABELS AND MATERIAL SAFETY DATA SHEETS (MSDS) SHALL BE RETAINED AND MADE AVAILABLE TO THE ENGINEER UPON REQUEST.
C. SURPLUS PRODUCTS SHALL BE DISPOSED OF ACCORDING TO MANUFACTURER'S INSTRUCTIONS AND LOCAL AND STATE RECOMMENDED ACTIONS.

ONSITE AND OFFSITE PRODUCTS SPECIFIC PLANS:

A. THE FOLLOWING PRODUCT SPECIFIC PRACTICES SHALL BE FOLLOWED ONSITE:

   PETROLEUM BASED PRODUCTS: ALL ONSITE VEHICLES SHALL BE MONITORED FOR LEAKS AND RECEIVE REGULAR PREVENTIVE MAINTENANCE TO REDUCE THE CHANCE OF LEAKAGE. PETROLEUM PRODUCTS SHALL BE STORED IN TIGHTLY SEALED CONTAINERS WHICH ARE CLEARLY LABELED. ANY ASPHALT SUBSTANCES USED ONSITE SHALL BE APPLIED ACCORDING TO THE MANUFACTURER'S RECOMMENDATION.
B. FERTILIZERS: FERTILIZERS SHALL BE APPLIED ONLY IN THE MINIMUM AMOUNTS RECOMMENDED BY THE MANUFACTURER. ONCE APPLIED, FERTILIZER SHALL BE WORKED INTO THE SOIL TO LIMIT EXPOSURE TO STORM WATER. STORAGE SHALL BE IN A COVERED SHED. THE CONTENTS OF ANY PARTIALLY USED BAGS OF FERTILIZER SHALL BE TRANSFERRED TO A SEALABLE PLASTIC BIN TO AVOID SPILLS.
C. PAINTS: ALL CONTAINERS SHALL BE SEALED AND STORED WHEN NOT REQUIRED FOR USE. DO NOT DISCHARGE EXCESS PAINT TO ANY WATERS OF THE UNITED STATES. DISPOSE PROPERLY ACCORDING TO MANUFACTURES' INSTRUCTIONS OR STATE AND LOCAL REGULATIONS.
D. CONCRETE TRUCKS: CONCRETE TRUCK DRUM WASH WATER SHALL BE WASHED OUT OR DISCHARGED ONLY AT A DESIGNATED SITE. DO NOT DISCHARGE WATER IN THE KEOKEA GULCH, ROADWAY DRAINAGE SYSTEM OR WATERS OF THE UNITED STATES. CONTACT DRINKING WATER BRANCH, DEPARTMENT OF HEALTH AT 586–4258 TO RECEIVE PERMISSION TO DESIGNATE A DISPOSAL SITE. CLEAN DISPOSAL SITE AS REQUIRED OR AS REQUESTED BY THE OWNER'S REPRESENTATIVE.

5. NATIONAL POLLUTANT DISCHARGE ELIMINATION SYSTEM (NPDES) REQUIREMENTS:
   A. THE CONTRACTOR SHALL BE RESPONSIBLE FOR OBTAINING COPIES OF APPLICABLE PERMITS FROM THE DEPARTMENT OF PARKS & RECREATION INCLUDING BUT NOT LIMITED TO NATIONAL POLLUTION DISCHARGE ELIMINATION SYSTEM (NPDES), NOTICE OF INTENT AND GENERAL PERMIT FOR STORM WATER, HYDROSTATIC TEST AND DEWATERING DISCHARGES PRIOR TO COMMENCING CONSTRUCTION. NPDES PERMIT SHALL BE REQUIRED PRIOR TO GRADING OR GRUBBING WORK OVER AN AREA OF ONE ACRE OR MORE.
   B. THE CONTRACTOR SHALL OBTAIN COPY OF AND COMPLY WITH NATIONAL POLLUTION DISCHARGE ELIMINATION SYSTEM (NPDES) PERMIT REQUIREMENTS, INCLUDING THE STORM WATER POLLUTION PREVENTION PLAN. THE CONTRACTOR SHALL NOT START CONSTRUCTION UNTIL NOTICE OF GENERAL PERMIT COVERAGE (NGPC) IS RECEIVED FROM THE DEPARTMENT OF HEALTH, STATE OF HAWAI'I AND HAS SATISFIED ANY OTHER APPLICABLE REQUIREMENTS OF THE NPDES PERMIT PROGRAM.
   C. THE CONTRACTOR SHALL COMPLETE AND SUBMIT A CONTRACTOR'S CERTIFICATION OF NPDES COMPLIANCE, INCLUDING COMPLETION OF THE BEST MANAGEMENT PRACTICE (BMP) CHECKLIST AND SUBMITTAL OF A WRITTEN SITE SPECIFIC BMP PLAN AND DRAWINGS, PRIOR TO START OF CONSTRUCTION.
6. SITE SPECIFIC SPILL PREVENTION PLAN:

CONTRACTOR SHALL:

A. PREPARE AND POST A SITE SPECIFIC SPILL PREVENTION PLAN (SSSPP) TO INCLUDE MEASURES TO PREVENT AND CLEAN UP EACH SPILL. ALL EQUIPMENT AND PROCEDURES IN THE SSSPP SHALL BE IN PLACE DURING CONSTRUCTION ACTIVITY.
B. THE CONTRACTOR SHALL BE THE SPILL PREVENTION AND CLEANUP COORDINATOR. DESIGNATE AT LEAST THREE SITE PERSONNEL WHO SHALL RECEIVE SPILL PREVENTION AND CLEANUP TRAINING. THESE INDIVIDUALS SHALL EACH BECOME RESPONSIBLE FOR A PARTICULAR PHASE OF PREVENTION AND CLEANUP. POST THE NAMES OF RESPONSIBLE SPILL PERSONNEL IN THE MATERIAL STORAGE AREA AND IN THE OFFICE TRAILER ONSITE.
C. CLEARLY POST MANUFACTURER'S RECOMMENDED METHODS FOR SPILL CLEANUP AND MAKE SITE PERSONNEL AWARE OF THE PROCEDURES AND THE LOCATION OF INFORMATION AND CLEANUP SUPPLIES.
D. KEEP MATERIALS AND EQUIPMENT NECESSARY FOR SPILL CLEANUP IN THE MATERIAL STORAGE AREA ONSITE.
E. CLEANUP ALL SPILLS IMMEDIATELY AFTER DISCOVERY.
F. KEEP THE SPILL AREA WELL VENTILATED. PERSONNEL SHALL WEAR APPROPRIATE PROTECTIVE CLOTHING TO PREVENT INJURY FROM CONTACT WITH HAZARDOUS SUBSTANCE.
G. REPORT SPILLS OF TOXIC HAZARDOUS MATERIAL TO THE APPROPRIATE STATE OR LOCAL GOVERNMENT AGENCY, REGARDLESS OF THE SIZE.

REVISION	DESCRIPTION	DATE

CLIFFORD N. MUKAI
LICENSED PROFESSIONAL ENGINEER
NO. 6667–C
HAWAII, U.S.A.

License Expires: April 30, 2018

SIGNATURE DATE

THIS WORK WAS PREPARED BY ME OR UNDER MY SUPERVISION AND CONSTRUCTION OF THIS PROJECT WILL BE UNDER MY OBSERVATION "AS DEFINED IN SECTION 16–115–2 OF THE HAWAII ADMINISTRATIVE RULES FOR PROFESSIONAL ENGINEERS, ARCHITECTS, LAND SURVEYORS AND LANDSCAPE ARCHITECTS"

WARREN S. UNEMORI ENGINEERING, INC.
CIVIL & STRUCTURAL ENGINEERS/LAND SURVEYORS
WELLS STREET PROFESSIONAL CENTER, SUITE 403
2145 WELLS STREET, WAILUKU, MAUI, HAWAII 96793

SOUTH MAUI COMMUNITY PARK RECREATION CENTER

PROJECT NO.: P12 / 012 TAX MAP KEY: (2) 2-2-02 : 42

Waiohuli - Keokea (Kihei), Makawao, Maui, Hawaii

TITLE CONSTRUCTION NOTES

B.A.W. DESIGNED BY	C.N.M. CHECKED BY	03031.30 JOB NUMBER	C2.04 SHEET
D.P.T. DRAWN BY	C.N.M. APPROVED BY	Nov. 1, 2016 DATE	OF SHEETS
AS NOTED SCALE			

V:\Projdata\03proj\03031.30 – South Maui Comm Park – Gymnasium (ADC)\dwg\conplans\notesht–00.dwg

CONSTRUCTION NOTES:

SITE UTILITIES NOTES:

1. LOCATIONS OF EXISTING UTILITIES, AS SHOWN ON PLANS AND/OR PROFILES, ARE APPROXIMATE ONLY AND ARE BASED ON AVAILABLE CONSTRUCTIONS PLANS FOR SAME, ASSUMING STANDARD MINIMUM COVERS, AND/ OR VISIBLE FIELD FEATURES. CONTRACTOR SHALL VERIFY ACTUAL LOCATION, DEPTH AND TYPE OF SUCH, IN THE FIELD, PRIOR TO COMMENCEMENT OF CONSTRUCTION. ALL CONFLICTS AND/OR DISCREPANCIES SHALL BE PROMPTLY REPORTED TO THE ENGINEER, BEFORE PROCEEDING ANY FURTHER WITH THE WORK.
2. CONTRACTOR SHALL PROVIDE AND INSTALL ALL REQUIRED FITTINGS, APPURTENANCES, AND MATERIALS, AS REQUIRED, TO PROVIDE A COMPLETE, FUNCTIONABLE UTILITY SERVICE SYSTEM CONFORMING TO ALL CURRENT, APPLICABLE STANDARDS AND REQUIREMENTS.
3. INVERTS SHOWN AT ENDS OF SERVICE LATERALS INTENDED TO BE AT 5' FROM BUILDING. CONTRACTOR SHALL CONFIRM LOCATION AND INVERT ELEVATIONS OF BUILDING UTILITIES WITH MECHANICAL AND ARCHITECTURAL PLANS PRIOR TO CONSTRUCTION.
4. CONTRACTOR SHALL VERIFY ALL LOCATIONS OF REQUIRED CONNECTIONS AT BUILDINGS WITH THE MECHANICAL AND ARCHITECTURAL PLANS AND PROVIDE ALL REQUIRED FITTINGS (INCLUDING BUT NOT LIMITED TO REDUCERS, TEMPORARY PLUGS OR CAPS, AND MARKERS) AND COORDINATION REQUIRED TO MAKE CONNECTION (BY OTHERS). FINAL CONNECTIONS AT BUILDINGS SHALL BE MADE BY THE BUILDING CONTRACTOR.
5. ALL STORM DRAIN AND SANITARY SEWER CLEANOUTS LOCATED WITHIN PAVED AREAS SHALL HAVE A HEAVY DUTY ROUND NICKEL BRONZE TOP AND SHALL BE INSTALLED FLUSH TO GRADE.
6. STORM DRAIN PIPING 12 INCHES AND SMALLER IN DIAMETER SHALL BE SDR35 PVC PIPE (UNLESS OTHERWISE SPECIFIED ON THE PLANS). STORM DRAIN PIPING 15" AND LARGER IN DIAMETER SHALL BE HDPE PIPE, WITH A SMOOTH INTERIOR BORE (UNLESS OTHERWISE SPECIFIED ON THE PLANS).
   - A) ALL PIPE CONNECTIONS SHALL BE MADE USING FACTORY PRE-FABRICATED FITTINGS.
   - B) APPROPRIATE ADAPTERS SHALL BE USED TO TRANSITION BETWEEN DIFFERENT SIZES AND/OR DIFFERENT PIPE MATERIALS.
   - C) ALL JOINTS SHALL BE MADE WATER-TIGHT USING FLEXIBLE GASKETS. PLAIN END AND SOIL TIGHT JOINTS SHALL NOT BE ALLOWED.
   - D) ALL HDPE PIPE SHALL CONFORM TO ASTM F2648, AND HAVE WATER-TIGHT JOINTS THAT MEET OR EXCEED ASTM D3212 LAB TEST, AND ASTM F2487 AND ASTM F1417 WATER-TIGHT FIELD TEST. GASKETS SHALL MEET OR EXCEED THE REQUIREMENTS OF ASTM F477. FITTINGS SHALL CONFORM TO THE REQUIREMENTS OF ASTM F2306, AND MEET OR EXCEED ALL WATER-TIGHT JOINT REQUIREMENTS OF ASTM F2306.
7. ALL DRAINLINES WITHIN 8 FT. OF LANDSCAPED AREAS SHALL HAVE WATERTIGHT JOINTS AND CONNECTIONS. IN ADDITION, ALL JOINTS WITHIN 12 FT. OF TREES SHALL BE WRAPPED WITH TYPAR BIOBARRIER OR APPROVED EQUAL, FOR A MINIMUM LENGTH OF 16 FT. CENTERED ON TREE (8 FT. IN EACH DIRECTION).
8. WATER SYSTEM:
   - A) WATER SYSTEM PIPE MATERIALS SHALL CONFORM TO THE "STANDARD SPECIFICATIONS FOR WATER SYSTEM CONSTRUCTION, 2002", DEPARTMENT OF WATER SUPPLY, COUNTY OF MAUI.
   - B) WATER PIPING 4 INCHES IN DIAMETER OR LARGER SHALL BE CLASS 52 DUCTILE IRON WITH POLYETHYLENE ENCASEMENT.
   - C) WATER PIPING 3 INCHES IN DIAMETER OR SMALLER SHALL BE COPPER TUBING. PLAIN END AND SOIL TIGHT JOINTS SHALL NOT BE ALLOWED.
   - D) DIELECTRIC COUPLINGS SHALL BE USED AT ALL DISSIMILAR METAL WATERLINE CONNECTIONS.
9. SEWER LATERALS SHALL BE INSTALLED TO WITHIN 5 FT. OF BUILDING PERIMETER, SHALL BE TERMINATED WITH UTILITY MARKERS TO GRADE.
10. SANITARY SEWER PIPING SHALL BE SDR 35 PVC FOR SLOPES 1% OR GREATER AND SDR 26 PVC FOR SLOPES LESS THAN 1% (UNLESS OTHERWISE NOTED ON PLANS), CONFORMING TO SECTION 706.09 – "PVC PIPE FOR SEWER SYSTEM" OF THE 2005 HAWAII STANDARD SPECIFICATIONS FOR ROAD AND BRIDGE CONSTRUCTION.
11. CONTRACTOR SHALL INSTALL SLEEVES FOR LANDSCAPE IRRIGATION AT LOCATIONS IDENTIFIED ON LANDSCAPE IRRIGATION PLANS.
12. ALL UTILITY INSTALLATION SHALL COMPLY WITH APPLICABLE STATE, COUNTY AND PLUMBING CODE REQUIREMENTS.
13. SITE WORK CONTRACTOR SHALL COORDINATE WITH THE BUILDING UTILITY CONTRACTOR FOR SCHEDULE, TIMING AND SEQUENCING OF BUILDING UTILITY INSTALLATIONS (INCLUDING UTILITY CROSSINGS) OUTSIDE OF THE BUILDING STRUCTURE (INCLUDING, BUT NOT LIMITED TO; CHILLED WATERLINES, DOMESTIC WATER SERVICE LINES, SANITARY SEWER LINES, GREASE INTERCEPTOR, ETC.). COORDINATION SHALL INCLUDE THE MONITORING, INSPECTIONS, AND TESTING OF ALL UTILITY TRENCH EXCAVATION BY THE SOILS ENGINEER, AS REQUIRED.

EARTHWORK:

DISTANCE FROM TOP OF CUT OR BOTTOM OF FILL TO PROPERTY LINE:

HEIGHT OF CUT OR FILL	DISTANCE FROM PROPERTY LINE
0' TO 2':	1'
MORE THAN 2' TO 4':	2'
MORE THAN 4' TO 6':	3'
MORE THAN 6' TO 10':	4'
MORE THAN 10' TO 15':	5'
MORE THAN 15':	8'

HISTORICAL PRESERVATION NOTES:

1. SHOULD HISTORIC SITES SUCH AS WALLS, PLATFORMS, PAVEMENTS AND MOUNDS, OR REMAINS SUCH AS ARTIFACTS, BURIALS, CONCENTRATION OF CHARCOAL OR SHELLS ARE ENCOUNTERED DURING CONSTRUCTION WORK, WORK SHALL CEASE IN THE IMMEDIATE VICINITY OF THE FIND AND THE FIND SHALL BE PROTECTED FROM FURTHER DAMAGE. THE CONTRACTOR SHALL IMMEDIATELY CONTACT THE STATE HISTORIC PRESERVATION DIVISION (808-692-8015), WHICH WILL ASSESS THE SIGNIFICANCE OF THE FIND AND RECOMMEND AN APPROPRIATE MITIGATION MEASURE, IF NECESSARY.
2. AN ARCHAEOLOGICAL MONITORING PLAN (A.M.P.) HAS BEEN COMPLETED BY THE OWNER'S ARCHAEOLOGICAL CONSULTANT (ARCHAEOLOGICAL MONITORING REPORT FOR PI'ILANI I & II KIHEI COMMUNITY PARK PROJECT, KIHEI, KEOKEA AHUPUA'A', MAKAWAO DISTRICT, ISLAND OF MAUI, HAWAI'I [TMK 202092:42] PREPARED BY SCIENTIFIC CONSULTANT SERVICES, INC., MARCH 2011; SCS PROJECT NO. 826-AMR-2). CONTRACTOR SHALL OBTAIN A COPY OF THE A.M.P. PRIOR TO CONSTRUCTION AND FULLY COMPLY WITH THE DOCUMENT.
3. CONTRACTOR SHALL BE RESPONSIBLE FOR IMPLEMENTING ALL ENVIRONMENTAL AND ARCHAEOLOGICAL MONITORING AND/OR MITIGATION MEASURES, AND FOR COMPLYING WITH ALL RECOMMENDATIONS AND/OR REQUIREMENTS THEREIN, TO THE SATISFACTION OF THE OWNER AND OWNER'S ARCHAEOLOGICAL CONSULTANT.
4. CONTRACTOR SHALL CONTACT SCIENTIFIC CONSULTANT SERVICES, INC. ARCHAEOLOGIST, MICHAEL DEGA AT (808) 597-1182, A MINIMUM OF FOUR (4) DAYS PRIOR TO THE BEGINNING OF CONSTRUCTION.

SITE STRUCTURES NOTES:

MATERIALS DATA:

CONCRETE:	f'c = 4,000 P.S.I. (MIN.)
CONC. MASONRY UNIT (CMU):	ASTM C90, GRADE N, f'm = 1,500 P.S.I. (MIN.)
MORTAR:	ASTM C270, TYPE S, f'c = 1,800 P.S.I. (MIN.)
GROUT:	ASTM C476, f'c = 3,000 P.S.I. (MIN.)
STEEL REINFORCEMENT:	ASTM A615 GRADE 60
FRAMING LUMBER:	DOUGLAS FIR/LARCH, GRADE MARKED PER WCLIB SPECIFICATIONS, NO. 2 OR BETTER

FOUNDATIONS AND LOAD DATA (APPROXIMATE ONLY):

CONCRETE UNIT WEIGHT: 150 PCF

WATER UNIT WEIGHT: 62 PCF

BACKFILL AND SUBGRADE: MOIST UNIT WEIGHT: 110 PCF
INTERNAL FRICTION ANGLE: ø = °
EQUIVALENT LATERAL FLUID PRESSURE:

ACTIVE STATE (IMPORTED GRANULAR BACKFILL):
LEVEL BACKFILL: 40 PCF
2H:1V: 60 PCF (H); 25 PCF (V)

PASSIVE STATE:
LEVEL BACKFILL: 250 PCF

ADDITIONAL DESIGN SURCHARGE: 50 PSF

FRICTIONAL COEFFICIENT: μ = 0.45

ALLOW. BEARING PRESSURE: q_{allow} = 3,000 P.S.F.

DESIGN CODES (INCLUDING ALL LATEST AMENDMENTS THERETO):

- ACI 318-11, "BUILDING CODE REQUIREMENTS FOR STRUCTURAL CONCRETE AND COMMENTARY"
- AASHTO "LRFD BRIDGE DESIGN SPECIFICATIONS, 7TH EDITION" (WHERE APPLICABLE)
- SEI / ASCE 7-05, "MINIMUM DESIGN LOADS FOR BUILDINGS AND OTHER STRUCTURES"
- INTERNATIONAL CODE COUNCIL, "INTERNATIONAL BUILDING CODE, 2006 EDITION", INCLUDING ALL MAUI COUNTY AMENDMENTS THERETO (CHAPTER 16.26B OF MAUI COUNTY CODE).

CONSTRUCTION JOINTS:

AT ALL CONSTRUCTION JOINTS, AS SHOWN AND ALLOWED ON THE DRAWINGS, WHEN CONCRETE IS PLACED AGAINST PREVIOUSLY HARDENED CONCRETE, THE INTERFACE SHALL BE CLEAN, FREE OF LAITANCE, AND INTENTIONALLY ROUGHENED TO A FULL AMPLITUDE OF APPROXIMATELY 1/4 INCH. CONTRACTOR SHALL APPLY EPOXY-MODIFIED, CEMENTITIOUS BONDING AGENT TO PREPARED JOINT PRIOR TO PLACING FRESH CONCRETE AGAINST EXISTING CONCRETE IN ACCORDANCE WITH ALL MANUFACTURER'S SPECIFICATIONS AND RECOMMENDATIONS ("SIKA ARMATEC 110 EPOCEM" OR APPROVED EQUAL).

PLACEMENT OF REINFORCING STEEL IN RETAINING WALL STEMS:

THE CONTRACTOR SHALL VERIFY TO THE OWNER'S REPRESENTATIVE OR STRUCTURAL ENGINEER (TO BE RETAINED BY OWNER) THAT THE VERTICAL TENSION REINFORCEMENT IS PROPERLY POSITIONED IN ACCORDANCE WITH THE DIMENSIONS SPECIFIED ON THE CONSTRUCTION PLANS:

1. DURING PLACEMENT OF THE FIRST COURSE OF 8" CMU AND 12" CMU (WHERE OCCURS) FOR CMU WALLS.
2. UPON COMPLETION OF FORMING AND PRIOR TO PLACEMENT OF CONCRETE FOR REINFORCED CONCRETE WALLS. A WRITTEN RECORD OF THIS OBSERVATION SHALL BE PROVIDED TO THE ENGINEER WITHIN TWO (2) WORKING DAYS.

SPLICES:

ALL SPLICES, AS SHOWN AND ALLOWED ON THE DRAWINGS, BUT NOT OTHERWISE SPECIFIED, SHALL BE LAPPED 1.3 TIMES THE DEVELOPMENT LENGTH (ld) OF THE SMALLER LAPPED BARS AND SHALL BE STAGGERED SUCH THAT NOT MORE THAN 50% OF THE BARS ARE LAP-SPLICED WITHIN THE REQUIRED LAP LENGTH. BAR SPLICES SHALL BE LOCATED AWAY FROM CONSTRUCTION JOINTS.

BACKFILL AND LOADING:

CONTRACTOR SHALL NOT COMMENCE BACKFILLING, NOR IMPOSE ANY LOAD UPON THE STRUCTURE OUTSIDE OF ITS OWN WEIGHTS, UNTIL MINIMUM CONCRETE COMPRESSIVE STRENGTH OF 3,000 P.S.I. (OR OTHERWISE SPECIFIED) HAS BEEN VERIFIED BY ASTM C31 TEST CYLINDER. CONTRACTOR SHALL LIMIT THE CONSTRUCTION LIVE LOADS DURING THE PLACEMENT AND COMPACTION OF THE BACKFILL BY USING SMALLER COMPACTION EQUIPMENT AS REQUIRED. CONTRACTOR SHALL PROVIDE ANY LATERAL SUPPORT AS REQUIRED DURING CONSTRUCTION FOR CONSTRUCTION LIVE LOAD SURCHARGES.

FORM AND FALSEWORK REMOVAL (MINIMUM ELAPSED TIME):

COLUMNS AND VERTICAL WALL SURFACES:

MAXIMUM HEIGHT 20 FT.	3 DAYS
HEIGHT GREATER THAN 20 FT.	7 DAYS
VERTICAL SIDES OF BEAMS	2 DAYS
SUPPORT UNDER ARCHES, BEAMS AND SLABS	14 DAYS
FOOTING SIDES (IF NOT CAST AGAINST EARTH)	24 HOURS

FOUNDATION AND SUBGRADE:

THE FOUNDATIONS SHALL BE SUBJECT TO INSPECTION AND APPROVAL BY THE SOILS ENGINEER PRIOR TO PLACING ANY STEEL REINFORCEMENT OR CONCRETE, TO VERIFY THAT THE ENCOUNTERED SUBSURFACE CONDITIONS ARE IN ACCORDANCE WITH THE DESIGN ASSUMPTIONS. UNSUITABLE MATERIALS BELOW ALL STRUCTURES SHALL BE REMOVED TO A MINIMUM DEPTH OF 1'-0" OR AS REQUIRED BY THE SOILS ENGINEER AND REPLACED WITH ACCEPTABLE GRANULAR MATERIALS, INCLUDING MATERIALS AS CALLED FOR ON THE PLANS, TO THE SATISFACTION OF THE SOILS ENGINEER. ALL MATERIALS BELOW AND ADJACENT TO STRUCTURES, INCLUDING SUBGRADE, SHALL BE COMPACTED TO A MINIMUM OF 95% ASTM D1557 RELATIVE COMPACTION.

CONCRETE SURFACE FINISH:

CONCRETE SHALL BE PLACED AND COMPACTED TO PRODUCE A SURFACE OF EVEN TEXTURE, FREE FROM VOIDS, WATER OR AIR POCKETS, AND SO THAT THE COARSE AGGREGATE IS FORCED AWAY FROM THE FORMS TO LEAVE A MORTAR SURFACE. ALL FORM BOLTS AND TIES SHALL BE REMOVED TO A DEPTH OF AT LEAST ONE (1) INCH BELOW THE SURFACE OF THE CONCRETE AND THE RESULTING HOLES OR DEPRESSIONS SHALL BE CLEANED, WETTED AND FILLED WITH MORTAR, TINTED AS REQUIRED. ALL SURFACES EXPOSED TO VIEW SHALL BE RUBBED TO OBTAIN SATISFACTORY COLOR MATCH TO THE SURROUNDING CONCRETE. ALL FINS AND OTHER PROJECTIONS SHALL BE REMOVED. ALL POCKETS AND PINHOLES SHALL BE FILLED WITH MORTAR. ANY DISCOLORATION OR STAINING SHALL BE REMOVED FROM ALL SURFACES EXPOSED TO VIEW. ALL EXPOSED SURFACES SHALL THEN BE RUBBED TO PRODUCE A SMOOTH, EVEN SURFACE OF UNIFORM APPEARANCE FREE FROM UNSIGHTLY BULGES AND DEPRESSIONS DUE TO FORM IMPRESSIONS AND OTHER IMPERFECTIONS.

PRECAST MEMBERS:

FOR PORTIONS OF THE STRUCTURE THAT WILL BE PRECAST, EXTREME CARE SHALL BE EXERCISED IN HANDLING, STORING, MOVING, AND ERECTING PRECAST CONCRETE MEMBERS TO AVOID TWISTING, RACKING, OR OTHER DISTORTION THAT WOULD RESULT IN CRACKING OR DAMAGE TO THE MEMBERS. PRECAST MEMBERS SHALL BE HANDLED, TRANSPORTED AND ERECTED IN AN UPRIGHT POSITION AND THE POINT OF SUPPORT AND DIRECTION OF THE REACTIONS WITH RESPECT TO THE MEMBER SHALL BE APPROXIMATELY THE SAME AS WHEN THE MEMBER IS IN ITS FINAL POSITION. UNITS DAMAGED BY IMPROPER STORING OR HANDLING SHALL BE REPLACED BY THE CONTRACTOR, AT THE CONTRACTOR'S EXPENSE.

ENGINEERING FABRICS:

ENGINEERING FABRICS AND GEOTEXTILES SHALL BE INSTALLED IN STRICT ACCORDANCE WITH THE REQUIREMENTS HEREIN AND THE CONTRACT SPECIFICATIONS, OR, IN THE ABSENCE OF SUCH CRITERIA, IN ACCORDANCE WITH ALL MANUFACTURER'S SPECIFICATIONS AND RECOMMENDATIONS. ENGINEERING FABRICS AND GEOTEXTILES SHALL BE FURNISHED IN PROTECTIVE COVER CAPABLE OF PROTECTING THE FABRIC FROM ULTRAVIOLET RAYS, ABRASION AND WATER, AND SHALL NOT BE LEFT EXPOSED TO SUNLIGHT IF BACKFILL IS NOT PROMPTLY PLACED. MATERIAL THAT BECOMES TORN OR OTHERWISE DAMAGED THROUGH ANY CAUSE SHALL BE REMOVED AND REPLACED WITH UNDAMAGED FILTER FABRIC, IN STRICT ACCORDANCE WITH THE MANUFACTURER'S RECOMMENDATIONS AND SPECIFICATIONS, AT THE CONTRACTOR'S EXPENSE.

FILTER FABRIC:

UNLESS OTHERWISE SPECIFIED, FILTER FABRIC SHALL CONFORM TO THE PROJECT SPECIFICATIONS AND THE LATEST VERSION OF THE HAWAII STANDARD SPECIFICATIONS FOR ROAD AND BRIDGE CONSTRUCTION; SECTION 716.03 GEOTEXTILES FOR UNDERDRAIN APPLICATIONS. UNLESS OTHERWISE APPROVED BY THE PROJECT SOILS ENGINEER, THE FABRIC SHALL BE NON-WOVEN.

MISCELLANEOUS METALS:

MISCELLANEOUS IRON AND STEEL ITEMS SHALL CONFORM TO THE DIMENSIONS AND DETAILS SHOWN ON THE PLANS. UNLESS OTHERWISE SPECIFIED, MATERIALS SHALL CONFORM TO THE FOLLOWING SPECIFICATIONS:

STEEL BARS, PLATES AND SHAPES	ASTM DESIGNATION: A36, A575, A576 (AISI OR M GRADES 1016 THROUGH 1030 EXCEPT GRADE 1017)
BOLTS AND NUTS	ASTM DESIGNATION: A307
GRAY IRON CASTINGS	ASTM DESIGNATION: A48, CLASS 30B
DUCTILE IRON	CASTINGS ASTM DESIGNATION: A536, GRADE 65-45-12
CARBON STEEL	CASTINGS ASTM DESIGNATION: A27, GRADE 65-35
CAST IRON PIPE	COMMERCIAL QUALITY, STANDARD SOIL
STEEL PIPE	COMMERCIAL QUALITY, WELDED
WASHERS AND OTHER PARTS	COMMERCIAL QUALITY

WELDING SHALL CONFORM TO THE REQUIREMENTS IN AMERICAN WELDING STANDARDS AWS D1.1, STRUCTURAL WELDING CODE.

FABRICATION SHALL BE PERFORMED IN A WORKMANLIKE MANNER IN CONFORMANCE WITH THE PRACTICE IN MODERN SHOPS. BURRS, ROUGH AND SHARP EDGES, AND OTHER FLAWS SHALL BE REMOVED. WARPED PIECES SHALL BE STRAIGHTENED AFTER ALL FABRICATION AND GALVANIZING.

UNLESS OTHERWISE SPECIFIED, ALL STEEL ITEMS SHALL BE GALVANIZED AFTER FABRICATION. COMPONENTS OF BOLTED ASSEMBLIES SHALL BE GALVANIZED SEPARATELY PRIOR TO ASSEMBLY. GALVANIZED SURFACES THAT ARE ABRADED OR DAMAGED AT ANY TIME AFTER THE APPLICATION OF THE ZINC COATING SHALL BE REPAIRED BY THOROUGHLY WIRE BRUSHING THE DAMAGED AREAS AND REMOVING ALL LOOSE AND CRACKED COATING, AFTER WHICH THE CLEANED AREAS SHALL BE PAINTED WITH TWO (2) APPLICATIONS OF UNTHINNED ZINC-RICH PAINT CONFORMING TO THE REQUIREMENTS OF MILITARY SPECIFICATION DOD-P-21035A. SPRAY CANS SHALL NOT BE USED.

PRE-CAST REINFORCED CONCRETE PIPE, BOX CULVERTS, AND MANHOLES:

1. PRECAST CONCRETE PIPE (STANDARD AND BEVELED SECTIONS) AND PRE-FABRICATED BENDS WITH MANHOLES SHALL BE AMERON OR APPROVED EQUAL (CONTRACTOR SHALL SUBMIT SHOP DRAWINGS FOR REVIEW AND APPROVAL PRIOR TO ORDERING MATERIALS).
2. PIPE AND BOX CULVERT SHALL BE INSTALLED STARTING AT THE EXTREME DOWNSTREAM END AND PROGRESS UPSTREAM. PIPE, BOX CULVERT AND MANHOLE JOINTS SHALL BE WATERTIGHT, BUTT TO BUTT. ALL JOINTS SHALL BE:
   - A. COMPLETELY WRAPPED AROUND THE ENTIRE EXTERIOR PERIMETER WITH BUTYL RESIN SEALANT WITH CROSS-LAMINATED POLYOLEFIN PLASTIC BARRIOR (CONWRAP CS-212 OR APPROVED EQUAL) PRIOR TO BACKFILLING.
   - B. COMPLETELY MORTARED AROUND THE INTERIOR PERIMETER WITH FAST-SETTING, NON- SHRINKING REPAIR COMPOUND (ALL-CRETE 20 MINUTE SET OR APPROVED EQUAL) AFTER THE PIPE IS BACKFILLED.
3. WHERE PRECAST CONCRETE PIPE REINFORCEMENT IS EXPOSED AT ENDS, ALL PIPE REINFORCEMENT SHALL BE CAREFULLY REMOVED TO A DEPTH OF AT LEAST ONE (1) INCH BELOW THE SURFACE OF THE CONCRETE, WITHOUT DAMAGE TO THE ADJOINING CONCRETE. THE RESULTING HOLES OR DEPRESSIONS SHALL BE CLEANED, WETTED AND FILLED WITH POLYMER-MODIFIED, NON-SHRINK MORTAR.

MISCELLANEOUS:

1. COUNTY OF MAUI, THE ENGINEER AND THE SOILS ENGINEER SHALL BE NOTIFIED A MINIMUM OF TWO (2) WORKING DAYS PRIOR TO THE PLACEMENT OF ANY CONCRETE.

REVISION	DESCRIPTION	DATE

CLIFFORD N. MUKAI
LICENSED PROFESSIONAL ENGINEER
NO. 6667-C
HAWAII, U.S.A.

License Expires: April 30, 2018

SIGNATURE DATE

THIS WORK WAS PREPARED BY ME OR UNDER MY SUPERVISION AND CONSTRUCTION OF THIS PROJECT WILL BE UNDER MY OBSERVATION "AS DEFINED IN SECTION 16-115-2 OF THE HAWAII ADMINISTRATIVE RULES FOR PROFESSIONAL ENGINEERS, ARCHITECTS, LAND SURVEYORS AND LANDSCAPE ARCHITECTS"

WARREN S. UNEMORI ENGINEERING, INC.
CIVIL & STRUCTURAL ENGINEERS/LAND SURVEYORS
WELLS STREET PROFESSIONAL CENTER, SUITE 403
2145 WELLS STREET, WAILUKU, MAUI, HAWAII 96793

SOUTH MAUI COMMUNITY PARK RECREATION CENTER

PROJECT NO.: P12 / 012 TAX MAP KEY: (2) 2-2-02 : 42
Waiohuli - Keokea (Kihei), Makawao, Maui, Hawaii

TITLE CONSTRUCTION NOTES

B.A.W. DESIGNED BY	C.N.M. CHECKED BY	03031.30 JOB NUMBER	C2.05 SHEET
D.P.T. DRAWN BY	C.N.M. APPROVED BY	Nov. 1, 2016 DATE	OF SHEETS
SCALE AS NOTED			

11-01-2016 (BID SET)

V:\Projects\03proj\03031.30 - South Maui Comm Park - Gymnasium (ADC)\dwg\contplans\notes01-02.dwg

11-01-2016 (BID SET)

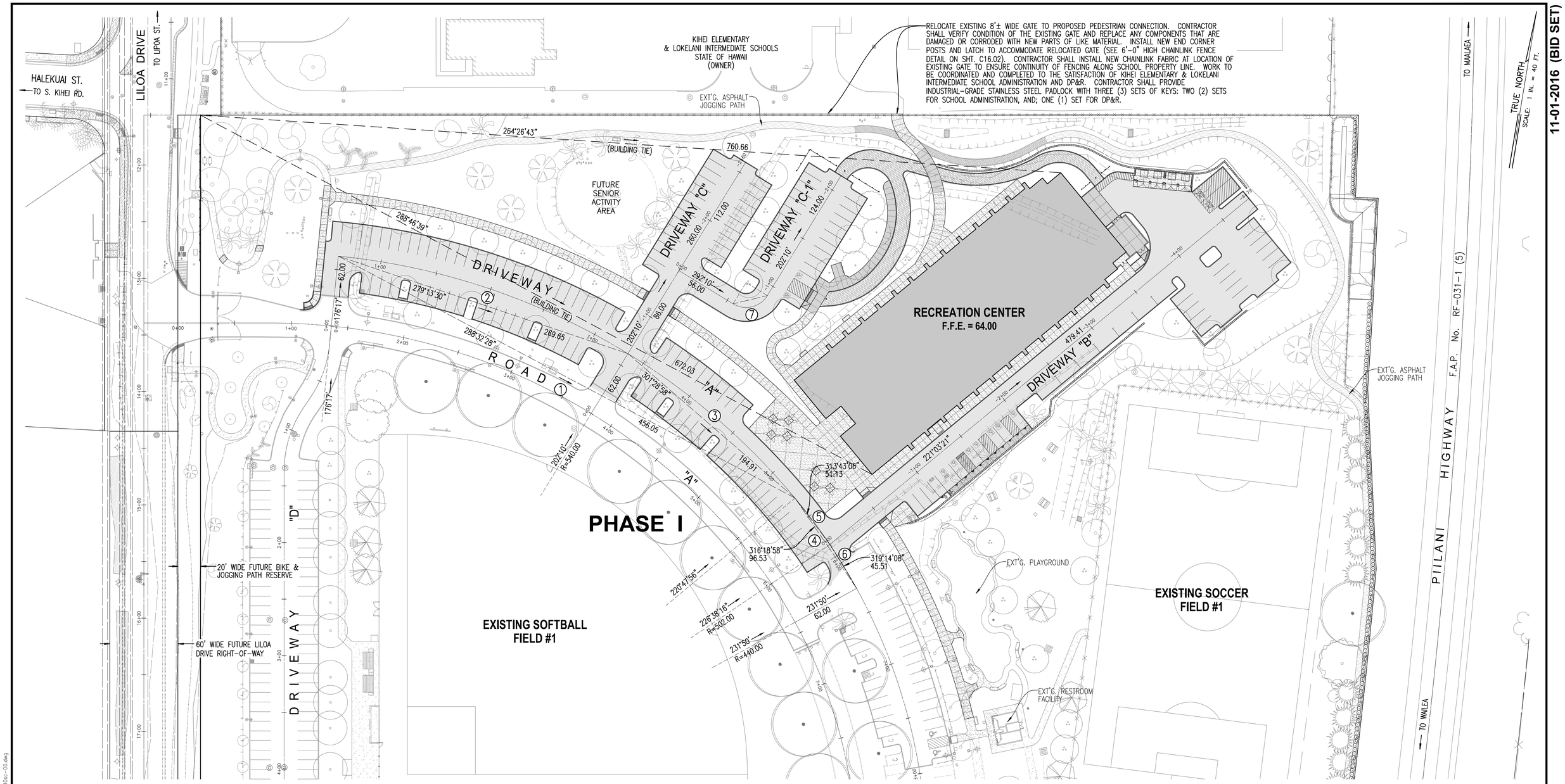

① ℄ CURVE DATA
△=44°30'56"
R=602.00
L=467.72
T=246.38
C=456.05
Ch.Az.=288°32'28"

② ℄ CURVE DATA
△=25°53'
R=602.00
L=271.95
T=138.34
C=269.65
Ch.Az.=279°13'30"

③ ℄ CURVE DATA
△=18°37'56"
R=602.00
L=195.77
T=98.76
C=194.91
Ch.Az.=301°28'58"

④ ℄ CURVE DATA
△=11°02'04"
R=502.00
L=96.68
T=48.49
C=96.53
Ch.Az.=316°18'58"

⑤ ℄ CURVE DATA
△=5°50'19"
R=502.00
L=51.16
T=25.60
C=51.13
Ch.Az.=313°43'06"

⑥ ℄ CURVE DATA
△=5°11'44"
R=502.00
L=45.52
T=22.78
C=45.51
Ch.Az.=319°14'08"

⑦ ℄ CURVE DATA
△=90°00'
R=22.00
L=34.56
T=22.00
C=31.11
Ch.Az.=247°10'

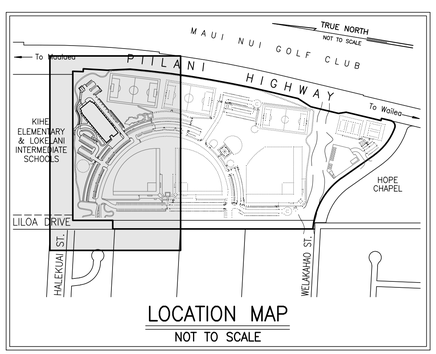

LOCATION MAP
NOT TO SCALE

REVISION	DESCRIPTION	DATE

CLIFFORD N. MUKAI
LICENSED PROFESSIONAL ENGINEER
NO. 6667-C
HAWAII, U.S.A.

License Expires: April 30, 2018

SIGNATURE DATE

THIS WORK WAS PREPARED BY ME OR UNDER MY SUPERVISION AND CONSTRUCTION OF THIS PROJECT WILL BE UNDER MY OBSERVATION "AS DEFINED IN SECTION 16-115-2 OF THE HAWAII ADMINISTRATIVE RULES FOR PROFESSIONAL ENGINEERS, ARCHITECTS, LAND SURVEYORS AND LANDSCAPE ARCHITECTS"

WARREN S. UNEMORI ENGINEERING, INC.
CIVIL & STRUCTURAL ENGINEERS/LAND SURVEYORS
WELLS STREET PROFESSIONAL CENTER, SUITE 403
2145 WELLS STREET, WAILUKU, MAUI, HAWAII 96793

SOUTH MAUI COMMUNITY PARK RECREATION CENTER

PROJECT NO.: P12 / 012 TAX MAP KEY: (2) 2-2-02 : 42
Waiohuli - Keokea (Kihei), Makawao, Maui, Hawaii

TITLE GENERAL SITE PLAN

B.A.W. DESIGNED BY	C.N.M. CHECKED BY	03031.30 JOB NUMBER	C3.01 SHEET
D.P.T. DRAWN BY	C.N.M. APPROVED BY	Nov. 1, 2016 DATE	OF SHEETS
SCALE AS NOTED			

V:\Projects\03proj\03031.30 - South Maui Comm Park - Gymnasium (ADC)\dwg\conplans\site-40sc-00.dwg

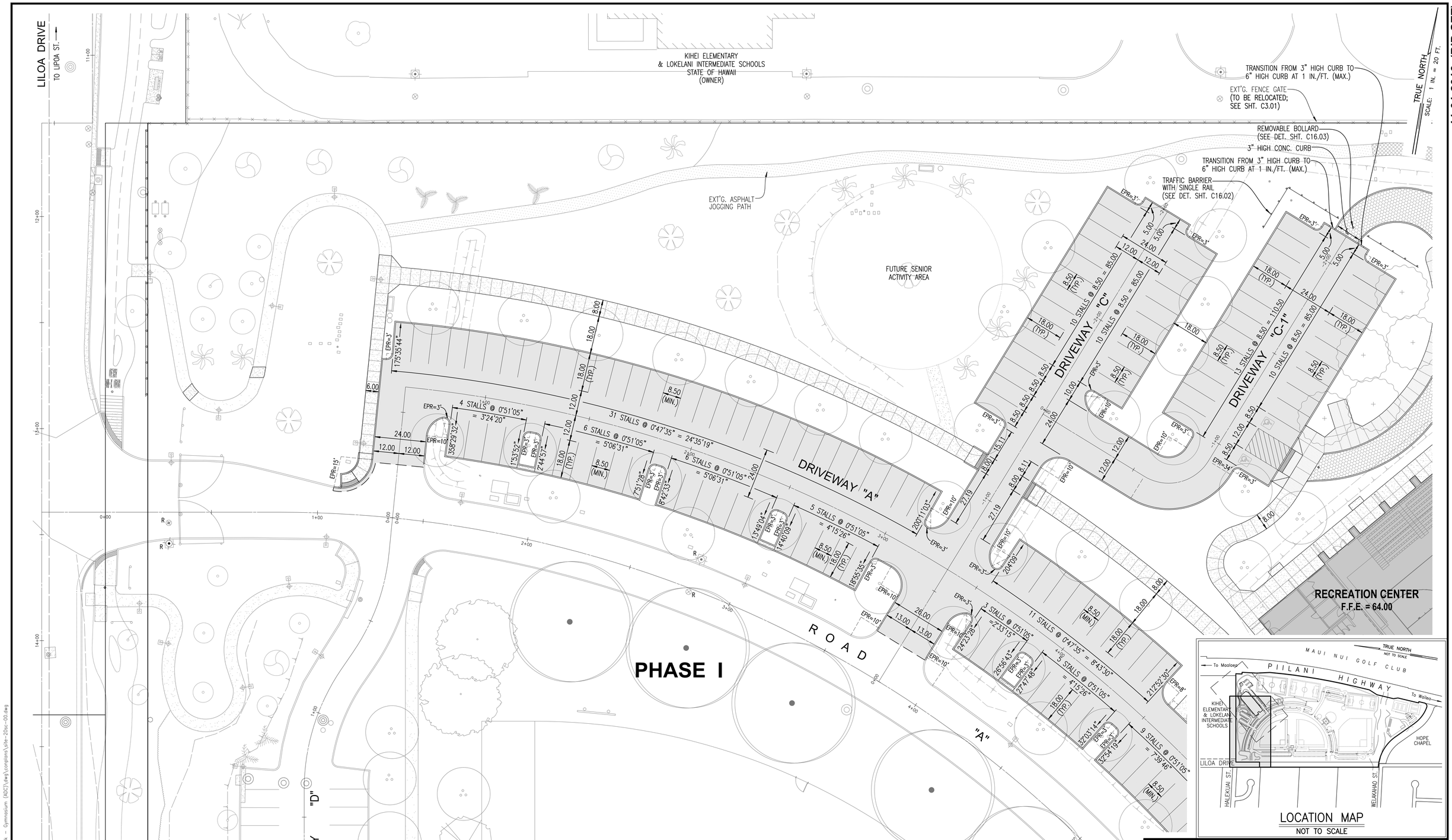

11-01-2016 (BID SET)

CLIFFORD N. MUKAI
LICENSED PROFESSIONAL ENGINEER
NO. 6667-C
HAWAII, U.S.A.

License Expires: April 30, 2018

SIGNATURE DATE

THIS WORK WAS PREPARED BY ME OR UNDER MY SUPERVISION AND CONSTRUCTION OF THIS PROJECT WILL BE UNDER MY OBSERVATION "AS DEFINED IN SECTION 16-115-2 OF THE HAWAII ADMINISTRATIVE RULES FOR PROFESSIONAL ENGINEERS, ARCHITECTS, LAND SURVEYORS AND LANDSCAPE ARCHITECTS"

REVISION	DESCRIPTION	DATE

WARREN S. UNEMORI ENGINEERING, INC.
CIVIL & STRUCTURAL ENGINEERS/LAND SURVEYORS
WELLS STREET PROFESSIONAL CENTER, SUITE 403
2145 WELLS STREET, WAILUKU, MAUI, HAWAII 96793

SOUTH MAUI COMMUNITY PARK
RECREATION CENTER

PROJECT NO.: P12 / 012 TAX MAP KEY: (2) 2-2-02 : 42
Waiohuli - Keokea (Kihei), Makawao, Maui, Hawaii

TITLE DETAILED SITE PLAN

B.A.W. DESIGNED BY	C.N.M. CHECKED BY	03031.30 JOB NUMBER	C3.02 SHEET
D.P.T. DRAWN BY	C.N.M. APPROVED BY	Nov. 1, 2016 DATE	OF SHEETS
SCALE AS NOTED			

I:\Projects\03proj\03031.30 - South Maui Comm Park - Gymnasium (ADC)\dwg\conptons\site-20sc-00.dwg

11-01-2016 (BID SET)

EXISTING SOCCER FIELD #1

PHASE I

EXISTING PLAYGROUND

SEE INSET BELOW

TRUE NORTH
SCALE: 1 IN. = 20 FT.

RETAINING WALL NO. 2
(SEE SHT. C9.02)

RETAINING WALL NO. 3
(SEE SHT. C9.02)

EXT'G. ASPHALT JOGGING PATH

6 STALLS @ 8.50=51.00

5 STALLS @ 8.50=42.50

5 PARALLEL STALLS @ 22.00 = 110.00

4 STALLS @ 8.50 = 34.00

DRIVEWAY "B"

2 STALLS @ 12.00=24.00

LOADING ZONE

TRASH ENCLOSURE
(SEE DET. SHT. C15.03)

TRAFFIC BARRIER WITH SINGLE RAIL
(SEE DET. SHT. C16.02)

TRANSITION FROM 3" HIGH CURB TO 6" HIGH CURB AT 1 IN./FT. (MAX.)

REMOVABLE BOLLARD
(SEE DET. SHT. C16.03)

3" HIGH CONC. CURB

RETAINING WALL NO. 1
(SEE SHT. C9.01)

RECREATION CENTER
F.F.E. = 64.00

3" HIGH CURB

11'-0" WIDE MAINTENANCE VEHICLE ACCESS
(SEE DET. SHT. C4.01)

EXT'G. ASPHALT JOGGING PATH TO BE REMOVED & REPLACED
(L=105'±; SEE DET. SHT. C16.02)

KIHEI ELEMENTARY & LOKELANI INTERMEDIATE SCHOOLS
STATE OF HAWAII
(OWNER)

RELOCATED FENCE GATE
(SEE SHT. C3.01)

EXT'G. ASPHALT JOGGING PATH TO BE REMOVED & REPLACED
(L=35'±; SEE DET. SHT. C16.02)

TRANSITION FROM 3" HIGH CURB TO 6" HIGH CURB AT 1 IN./FT. (MAX.)

REMOVABLE BOLLARD
(SEE DET. SHT. C16.03)

EXT'G. FENCE GATE
(TO BE RELOCATED; SEE SHT. C3.01)

3" HIGH CONC. CURB

TRANSITION FROM 3" HIGH CURB TO 6" HIGH CURB AT 1 IN./FT. (MAX.)

ADA-ACCESSIBLE PICNIC TABLE AREA
(SEE INSET 4 ON SHT. C6.01; SEE LANDSCAPE PLANS FOR PICNIC TABLE DETAILS)

10 STALLS @ 8.50 = 85.00
DRIVEWAY "C-1"

13 STALLS @ 8.50 = 110.50

10 STALLS @ 8.50 = 85.00
DRIVEWAY "C"

10 STALLS @ 8.50 = 85.00

TRAFFIC BARRIER WITH SINGLE RAIL
(SEE DET. SHT. C16.02)

EXT'G. ASPHALT JOGGING PATH

DRIVEWAY "A"

6 STALLS @ 1°01'55" =6°11'27"

9 STALLS @ 0°51'05" = 7°39'46"

ROAD "A"

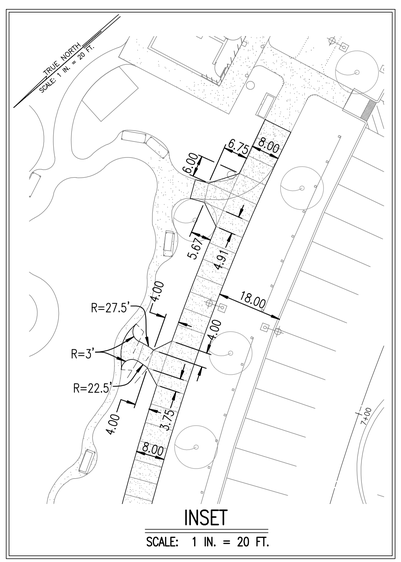

INSET
SCALE: 1 IN. = 20 FT.

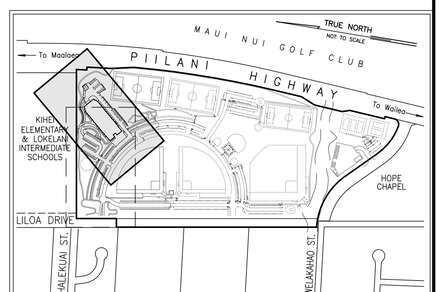

LOCATION MAP
NOT TO SCALE

REVISION	DESCRIPTION	DATE

CLIFFORD N. MUKAI
LICENSED PROFESSIONAL ENGINEER
NO. 6667-C
HAWAII, U.S.A.

License Expires: April 30, 2018

SIGNATURE DATE

THIS WORK WAS PREPARED BY ME OR UNDER MY SUPERVISION AND CONSTRUCTION OF THIS PROJECT WILL BE UNDER MY OBSERVATION "AS DEFINED IN SECTION 16-115-2 OF THE HAWAII ADMINISTRATIVE RULES FOR PROFESSIONAL ENGINEERS, ARCHITECTS, LAND SURVEYORS AND LANDSCAPE ARCHITECTS"

WARREN S. UNEMORI ENGINEERING, INC.
CIVIL & STRUCTURAL ENGINEERS/LAND SURVEYORS
WELLS STREET PROFESSIONAL CENTER, SUITE 403
2145 WELLS STREET, WAILUKU, MAUI, HAWAII 96793

SOUTH MAUI COMMUNITY PARK RECREATION CENTER

PROJECT NO.: P12 / 012 TAX MAP KEY: (2) 2-2-02 : 42
Waiohuli - Keokea (Kihei), Makawao, Maui, Hawaii

TITLE DETAILED SITE PLAN

B.A.W. DESIGNED BY	C.N.M. CHECKED BY	03031.30 JOB NUMBER	C3.03 SHEET
D.P.T. DRAWN BY	C.N.M. APPROVED BY	Nov. 1, 2016 DATE	OF SHEETS
SCALE AS NOTED			

I:\Projects\03proj\03031.30 - South Maui Comm Park - Gymnasium (ADC)\dwg\contrctn\site-20sc-00.dwg

NOTE:

SEE SHEET C16.01 FOR REINFORCED CONCRETE ALTERNATE PAVEMENT SECTION.

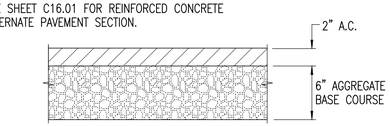

TYPICAL SECTION – A.C. DRIVEWAY & PARKING STANDARD PAVEMENT–TYPE "A"

SCALE: 1–1/2" = 1'–0"

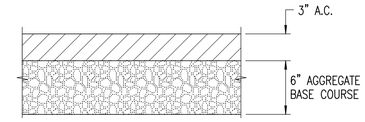

TYPICAL SECTION A.C. DRIVEWAY HEAVY PAVEMENT–TYPE "B"

SCALE: 1–1/2" = 1'–0"

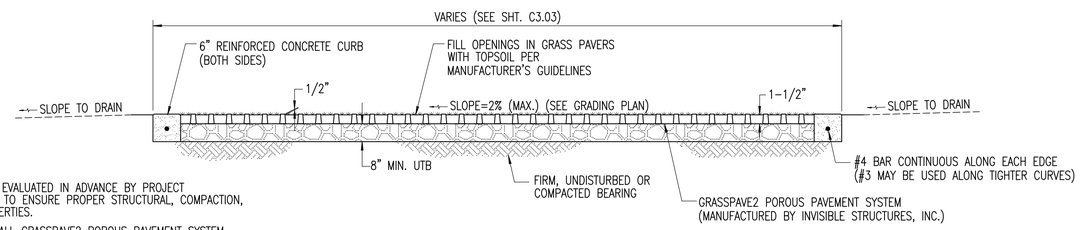

NOTES:

1. ONSITE SOILS SHALL BE EVALUATED IN ADVANCE BY PROJECT GEOTECHNICAL ENGINEER TO ENSURE PROPER STRUCTURAL, COMPACTION, AND PERMEABILITY PROPERTIES.
2. CONTRACTOR SHALL INSTALL GRASSPAVE2 POROUS PAVEMENT SYSTEM (MANUFACTURED BY INVISIBLE STRUCTURES, INC.) IN ACCORDANCE WITH MANUFACTURER'S SPECIFICATIONS AND RECOMMENDATIONS. CONTRACTOR SHALL FULLY ESTABLISH GRASS ON PAVERS. INSTALLATION AND GRASSING SHALL BE TO THE SATISFACTION OF THE OWNER.
3. CONCRETE SHALL HAVE COMPRESSIVE STRENGTH OF 4,000 PSI (MIN.)

TYPICAL MAINTENANCE VEHICLE ACCESS AND FOOD TRUCK AREA

NOT TO SCALE

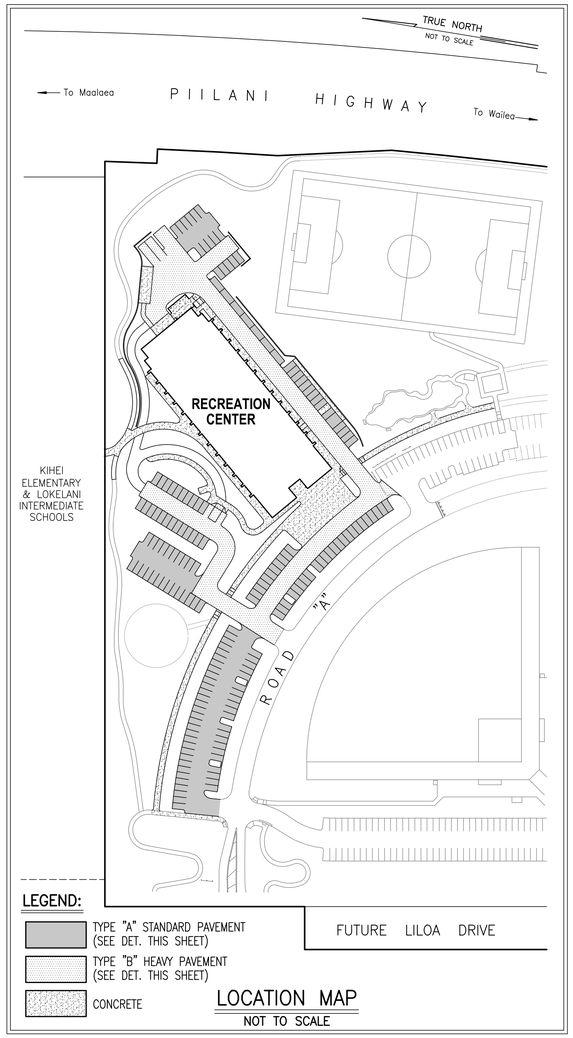

LOCATION MAP

NOT TO SCALE

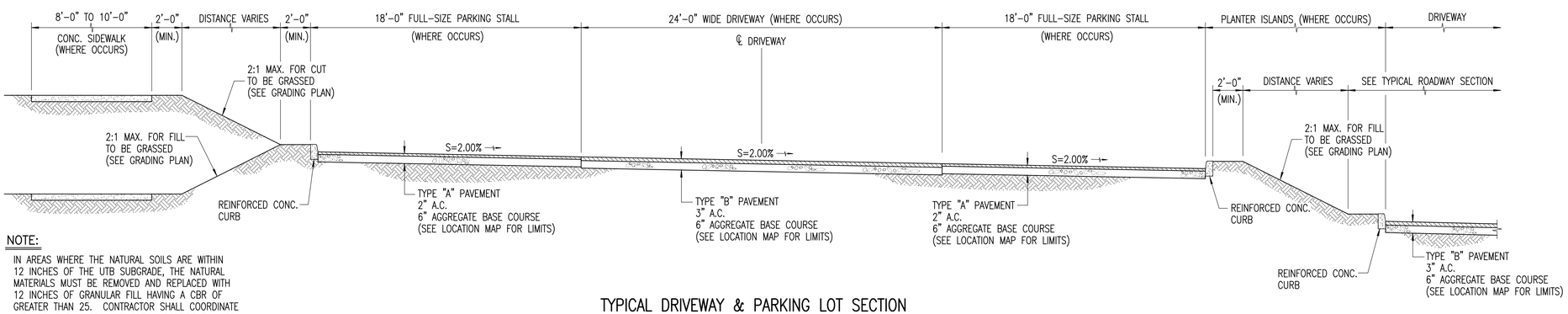

NOTE:

IN AREAS WHERE THE NATURAL SOILS ARE WITHIN 12 INCHES OF THE UTB SUBGRADE, THE NATURAL MATERIALS MUST BE REMOVED AND REPLACED WITH 12 INCHES OF GRANULAR FILL HAVING A CBR OF GREATER THAN 25. CONTRACTOR SHALL COORDINATE WITH SOILS ENGINEER AND OBTAIN CERTIFICATION FROM SOILS ENGINEER OF THE SAME.

TYPICAL DRIVEWAY & PARKING LOT SECTION

SCALE: 1/4 IN. = 1 FT.

REVISION	DESCRIPTION	DATE

CLIFFORD N. MUKAI
LICENSED PROFESSIONAL ENGINEER
NO. 6667–C
HAWAII, U.S.A.

License Expires: April 30, 2018

SIGNATURE DATE

THIS WORK WAS PREPARED BY ME OR UNDER MY SUPERVISION AND CONSTRUCTION OF THIS PROJECT WILL BE UNDER MY OBSERVATION "AS DEFINED IN SECTION 16–115–2 OF THE HAWAII ADMINISTRATIVE RULES FOR PROFESSIONAL ENGINEERS, ARCHITECTS, LAND SURVEYORS AND LANDSCAPE ARCHITECTS"

WARREN S. UNEMORI ENGINEERING, INC.
CIVIL & STRUCTURAL ENGINEERS/LAND SURVEYORS
WELLS STREET PROFESSIONAL CENTER, SUITE 403
2145 WELLS STREET, WAILUKU, MAUI, HAWAII 96793

SOUTH MAUI COMMUNITY PARK RECREATION CENTER

PROJECT NO.: P12 / 012 TAX MAP KEY: (2) 2-2-02 : 42
Waiohuli - Keokea (Kihei), Makawao, Maui, Hawaii

TITLE TYPICAL DRIVEWAY SECTIONS

B.A.W. DESIGNED BY	C.N.M. CHECKED BY	03031.30 JOB NUMBER	C4.01 SHEET
D.P.T. DRAWN BY	C.N.M. APPROVED BY	Nov. 1, 2016 DATE	OF SHEETS
SCALE AS NOTED			

11-01-2016 (BID SET)

K:\Projects\03proj\03031.30 – South Maui Comm Park – Gymnasium (ADC)\dwg\constpln\vp–sec20.dwg

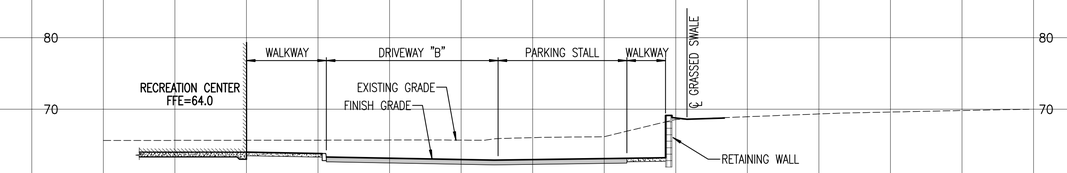

SECTION (A)

SCALE: HORIZ. 1" = 10'
VERT. 1" = 10'

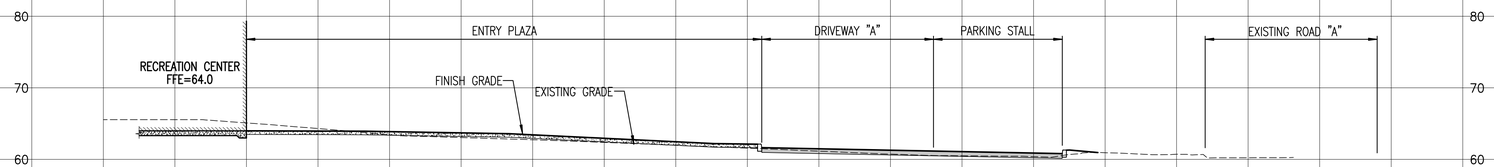

SECTION (B)

SCALE: HORIZ. 1" = 10'
VERT. 1" = 10'

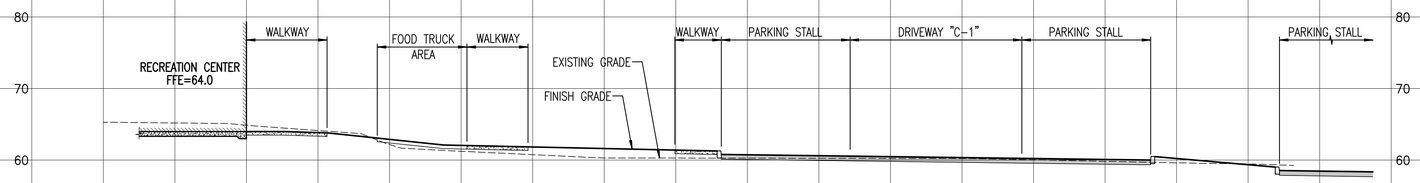

SECTION (C)

SCALE: HORIZ. 1" = 10'
VERT. 1" = 10'

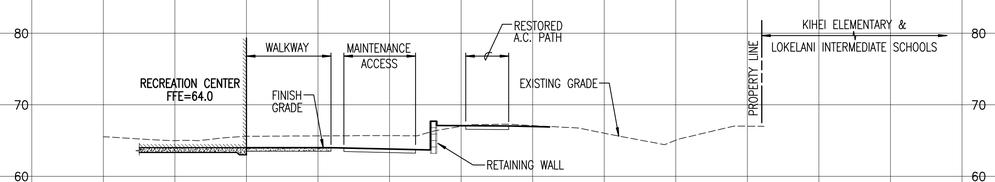

SECTION (D)

SCALE: HORIZ. 1" = 10'
VERT. 1" = 10'

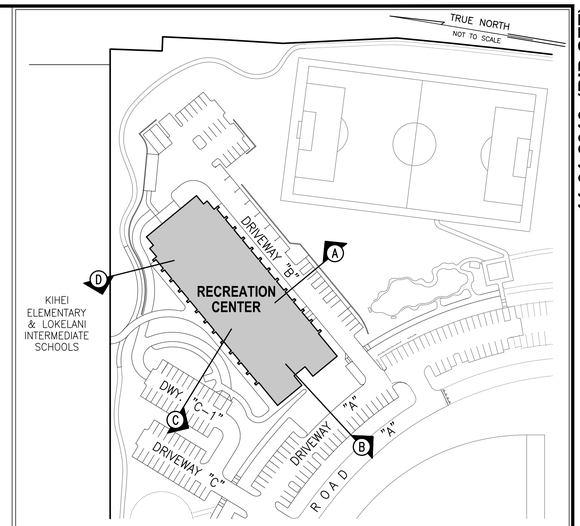

LOCATION MAP

NOT TO SCALE

11-01-2016 (BID SET)

REVISION	DESCRIPTION	DATE

CLIFFORD N. MUKAI
LICENSED PROFESSIONAL ENGINEER
NO. 6667-C
HAWAII, U.S.A.

SIGNATURE DATE License Expires: April 30, 2018

THIS WORK WAS PREPARED BY ME OR UNDER MY SUPERVISION AND CONSTRUCTION OF THIS PROJECT WILL BE UNDER MY OBSERVATION "AS DEFINED IN SECTION 16-115-2 OF THE HAWAII ADMINISTRATIVE RULES FOR PROFESSIONAL ENGINEERS, ARCHITECTS, LAND SURVEYORS AND LANDSCAPE ARCHITECTS"

WARREN S. UNEMORI ENGINEERING, INC.
CIVIL & STRUCTURAL ENGINEERS/LAND SURVEYORS
WELLS STREET PROFESSIONAL CENTER, SUITE 403
2145 WELLS STREET, WAILUKU, MAUI, HAWAII 96793

SOUTH MAUI COMMUNITY PARK
RECREATION CENTER

PROJECT NO.: P12 / 012 TAX MAP KEY: (2) 2-2-02 : 42
Waiohuli - Keokea (Kihei), Makawao, Maui, Hawaii

TITLE TYPICAL SITE SECTIONS

B.A.W. DESIGNED BY	C.N.M. CHECKED BY	03031.30 JOB NUMBER	C4.02 SHEET
D.P.T. DRAWN BY	C.N.M. APPROVED BY	Nov. 1, 2016 DATE	OF SHEETS
AS NOTED SCALE			

U:\Projects\03proj\03031.30 - South Maui Comm Park - Gymnasium (ADC)\dwg\compliance\csec0000.dwg

NOTES:

1. FINISH GRADE SPOT ELEVATIONS, INDICATED ON CONSTRUCTION PLANS, SHALL BE USED FOR THE PURPOSE OF DETERMINING INITIAL PROFILE. CONTRACTOR SHALL MAKE FIELD ADJUSTMENTS, AS REQUIRED, SO THAT THE FINAL PROFILE GRADES, AND CROSS SLOPES WILL PRODUCE THE DESIRED DRAINAGE PATTERN AS INDICATED ON THE CONSTRUCTION PLANS AND MAINTAIN POSITIVE DRAINAGE IN ALL DIRECTIONS. ALL TRANSITIONS SHALL BE SMOOTH.
2. EXISTING GRADES SHALL BE VERIFIED BY THE CONTRACTOR BEFORE PROCEEDING WITH GRADING WORK. SHOULD ANY DISCREPANCIES BE DISCOVERED IN THE EXISTING GRADES OR DIMENSIONS GIVEN ON THE PLANS, THE CONTRACTOR SHALL IMMEDIATELY NOTIFY THE ENGINEER BEFORE PROCEEDING FURTHER WITH ANY WORK, OTHERWISE HE WILL BE HELD RESPONSIBLE FOR ANY COSTS INVOLVED IN CORRECTION OF CONSTRUCTION PLACED DUE TO SUCH DISCREPANCIES.
3. OVERHEAD AND UNDERGROUND UTILITIES MAY EXIST ALONG, ACROSS, AND IN THE VICINITY OF THE PROPOSED IMPROVEMENTS AND MAY NOT BE AS SHOWN ON THE PLANS. CONTRACTOR SHALL BE RESPONSIBLE FOR CONTACTING THE RESPECTIVE COUNTY OR STATE AGENCIES, UTILITIES (INCLUDING WITHOUT LIMITATION MAUI ELECTRIC COMPANY, LTD., VERIZON HAWAII INC., AND OCEANIC TIME WARNER CABLE OF HAWAII), EXAMINING ANY AVAILABLE RECORD DRAWINGS, TONING OF UNDERGROUND UTILITIES, TEST PITS, AND CONFIRMING THE PRESENCE, LOCATION, DEPTH, SIZE, & TYPE OF ANY EXISTING UTILITIES ALONG AND ACROSS THE PROPOSED IMPROVEMENTS. CONTRACTOR SHALL NOTIFY AND COORDINATE CONSTRUCTION ACTIVITIES, AND ANY REQUIRED RELOCATION, WITH RESPECTIVE AGENCIES AND UTILITIES.
4. OWNERS OF ADJOINING LANDS, SHOWN ON PLAN, ARE TAKEN FROM RECORDS FILED IN THE REAL PROPERTY MAPPING BRANCH, & ARE SUBJECT TO VERIFICATION.

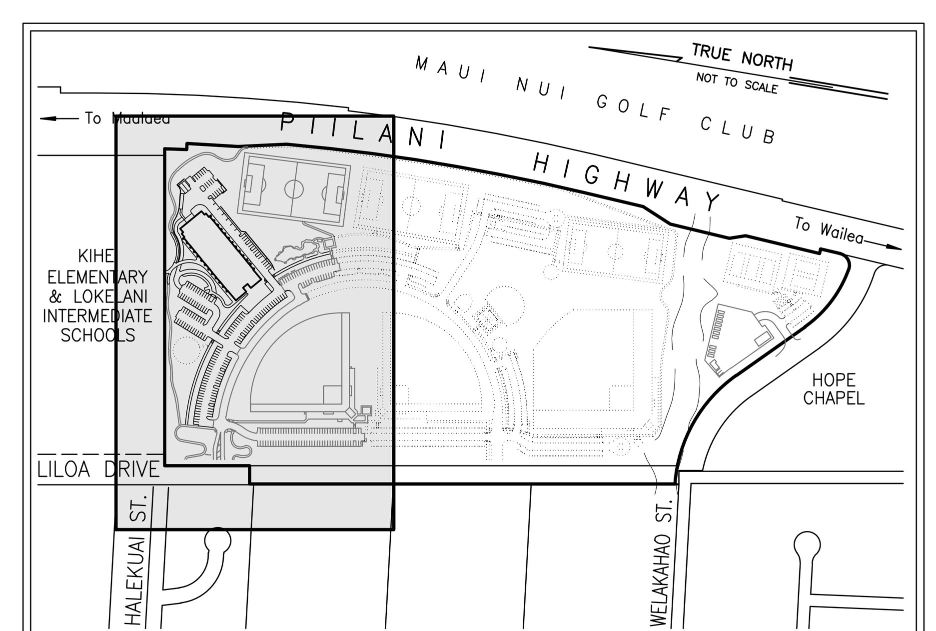

LOCATION MAP
NOT TO SCALE

REVISION	DESCRIPTION	DATE

CLIFFORD N. MUKAI
LICENSED PROFESSIONAL ENGINEER
NO. 6667-C
HAWAII, U.S.A.

License Expires: April 30, 2018

SIGNATURE DATE

THIS WORK WAS PREPARED BY ME OR UNDER MY SUPERVISION AND CONSTRUCTION OF THIS PROJECT WILL BE UNDER MY OBSERVATION "AS DEFINED IN SECTION 16-115-2 OF THE HAWAII ADMINISTRATIVE RULES FOR PROFESSIONAL ENGINEERS, ARCHITECTS, LAND SURVEYORS AND LANDSCAPE ARCHITECTS"

WARREN S. UNEMORI ENGINEERING, INC.
CIVIL & STRUCTURAL ENGINEERS/LAND SURVEYORS
WELLS STREET PROFESSIONAL CENTER, SUITE 403
2145 WELLS STREET, WAILUKU, MAUI, HAWAII 96793

SOUTH MAUI COMMUNITY PARK
RECREATION CENTER

PROJECT NO.: P12 / 012 TAX MAP KEY: (2) 2-2-02 : 42
Waiohuli - Keokea (Kihei), Makawao, Maui, Hawaii

TITLE GENERAL GRADING PLAN

B.A.W. DESIGNED BY	C.N.M. CHECKED BY	03031.30 JOB NUMBER	C5.01 SHEET
D.P.T. DRAWN BY	C.N.M. APPROVED BY	Nov. 1, 2016 DATE	OF SHEETS
SCALE	AS NOTED		

V:\Projdata\03proj\03031.30 - South Maui Comm Park - Gymnasium (ADC)\dwg\conplans\grad-40sc-00.dwg

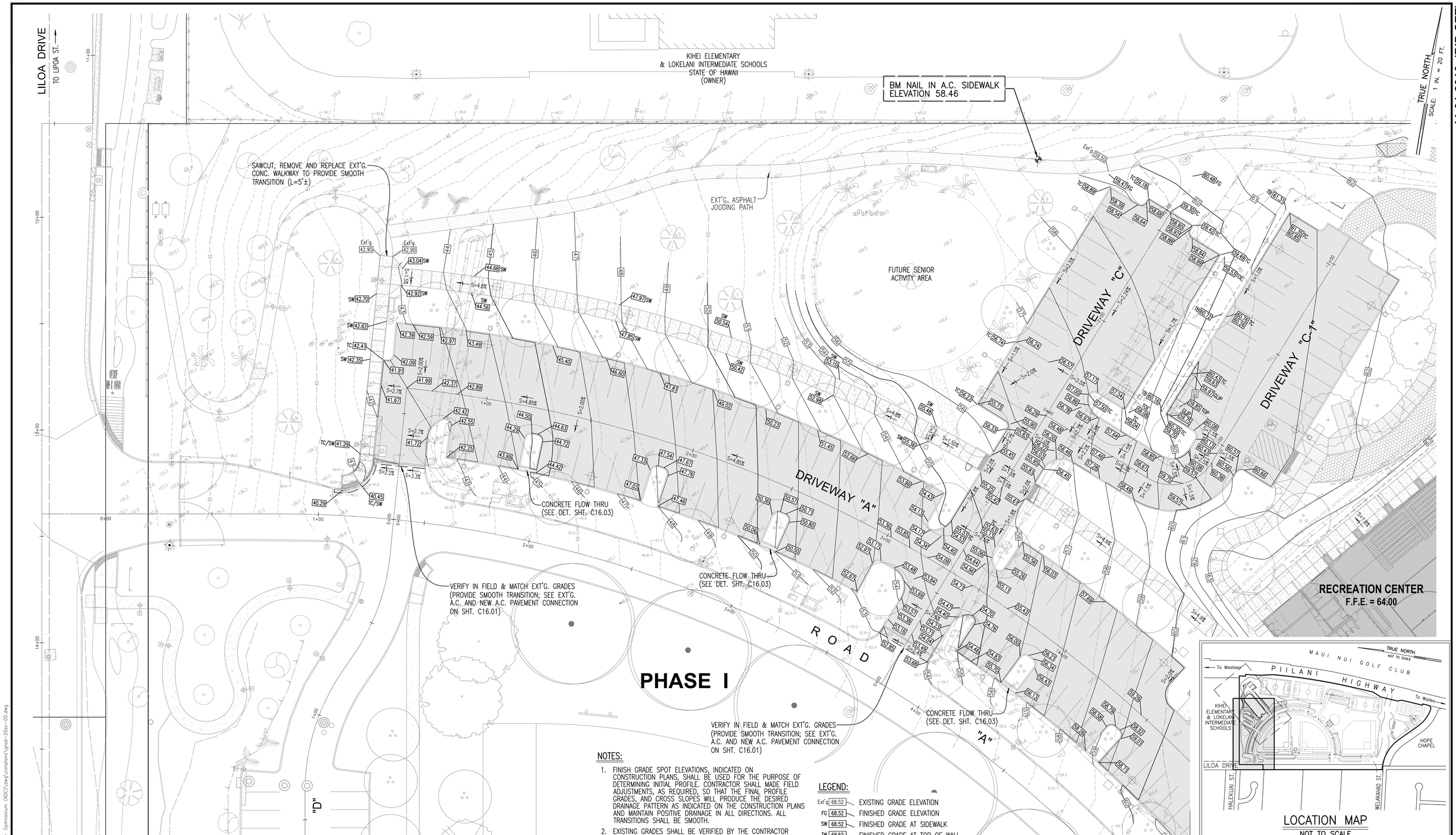

LOCATION MAP
NOT TO SCALE

NOTES:

1. FINISH GRADE SPOT ELEVATIONS, INDICATED ON CONSTRUCTION PLANS, SHALL BE USED FOR THE PURPOSE OF DETERMINING INITIAL PROFILE. CONTRACTOR SHALL MADE FIELD ADJUSTMENTS, AS REQUIRED, SO THAT THE FINAL PROFILE GRADES, AND CROSS SLOPES WILL PRODUCE THE DESIRED DRAINAGE PATTERN AS INDICATED ON THE CONSTRUCTION PLANS AND MAINTAIN POSITIVE DRAINAGE IN ALL DIRECTIONS. ALL TRANSITIONS SHALL BE SMOOTH.
2. EXISTING GRADES SHALL BE VERIFIED BY THE CONTRACTOR BEFORE PROCEEDING WITH GRADING WORK. SHOULD ANY DISCREPANCIES BE DISCOVERED IN THE EXISTING GRADES OR DIMENSIONS GIVEN ON THE PLANS, THE CONTRACTOR SHALL IMMEDIATELY NOTIFY THE ENGINEER BEFORE PROCEEDING FURTHER WITH ANY WORK, OTHERWISE HE WILL BE HELD RESPONSIBLE FOR ANY COSTS INVOLVED IN CORRECTION OF CONSTRUCTION PLACED DUE TO SUCH DISCREPANCIES.
3. SEE LEGEND ON SHT. C2.01.
4. SEE NOTES ON SHTS. C2.03 TO C2.05.
5. ALL ELEVATIONS REFLECT FINISHED GRADE OF ASPHALT PAVEMENT (TOE OF CURB) UNLESS OTHERWISE INDICATED.
6. ADJUST ALL EXISTING IMPROVEMENTS TO BE RETAINED (INCLUDING BUT NOT LIMITED TO, HANDHOLES, MANHOLES, VALVES, VALVE BOXES, HYDRANTS, LIGHT POLES, LANDSCAPE IRRIGATION, ETC.) TO NEW FINISHED GRADE.
7. SEE SHTS. C6.01 – C6.02 FOR CURB RAMP DETAILS.

LEGEND:

Ext'g 68.52	EXISTING GRADE ELEVATION
FG 68.52	FINISHED GRADE ELEVATION
SW 68.52	FINISHED GRADE AT SIDEWALK
TW 68.52	FINISHED GRADE AT TOP OF WALL
BW 68.52	FINISHED GRADE AT BOTTOM OF WALL
FL 68.52	FINISHED GRADE AT FLOW LINE
TOP 68.52	FINISHED GRADE AT TOP OF STRUCTURE
HP 68.52	FINISHED GRADE AT HIGH POINT
RIM 68.52	FINISHED GRADE AT TOP OF MANHOLE
AC 68.52	FINISHED GRADE AT TOP ASPHALT
TG 68.52	FINISHED GRADE AT TOP GRATE
TC 68.52	FINISHED GRADE AT TOP CURB
	FLOW DIRECTION
	DETECTABLE WARNING ON CURB RAMPS. (SEE DET. SHT. C10.02)
	GRADE BREAK/RIDGELINE

REVISION	DESCRIPTION	DATE

CLIFFORD N. MUKAI
LICENSED PROFESSIONAL ENGINEER
NO. 6667-C
HAWAII, U.S.A.

License Expires: April 30, 2018

SIGNATURE DATE

THIS WORK WAS PREPARED BY ME OR UNDER MY SUPERVISION AND CONSTRUCTION OF THIS PROJECT WILL BE UNDER MY OBSERVATION AS DEFINED IN SECTION 16-115-2 OF THE HAWAII ADMINISTRATIVE RULES FOR PROFESSIONAL ENGINEERS, ARCHITECTS, LAND SURVEYORS AND LANDSCAPE ARCHITECTS"

WARREN S. UNEMORI ENGINEERING, INC.
CIVIL & STRUCTURAL ENGINEERS/LAND SURVEYORS
WELLS STREET PROFESSIONAL CENTER, SUITE 403
2145 WELLS STREET, WAILUKU, MAUI, HAWAII 96793

SOUTH MAUI COMMUNITY PARK RECREATION CENTER

PROJECT NO.: P12 / 012 TAX MAP KEY: (2) 2-2-02 : 42
Waiohuli - Keokea (Kihei), Makawao, Maui, Hawaii

TITLE DETAILED GRADING PLAN

B.A.W. DESIGNED BY	C.N.M. CHECKED BY	03031.30 JOB NUMBER	C5.02 SHEET
D.P.T. DRAWN BY	C.N.M. APPROVED BY	Nov. 1, 2016 DATE	OF SHEETS
SCALE 1 IN. = 20 FT.			

11-01-2016 (BID SET)

V:\Projects\03proj\03031.30 - South Maui Comm Park - Gymnasium (ADC)\dwg\complans\grad-20sc-00.dwg

11-01-2016 (BID SET)

EXISTING SOCCER FIELD #1

PHASE I

EXISTING PLAYGROUND

SEE INSET BELOW

TRUE NORTH
SCALE: 1 IN. = 20 FT.

VERIFY IN FIELD & MATCH EXT'G. GRADES (PROVIDE SMOOTH TRANSITION; SEE EXT'G. A.C. AND NEW A.C. PAVEMENT CONNECTION ON SHT. C16.01)

EXT'G. ASPHALT JOGGING PATH

TRASH ENCLOSURE (SEE DET. SHT. C15.03)

DRIVEWAY "B"

DRIVEWAY "A"

ROAD "A"

RECREATION CENTER
F.F.E. = 64.00

ADA-ACCESSIBLE PICNIC TABLE AREA (SEE INSET 4 ON SHT. C6.01; SEE LANDSCAPE PLANS FOR PICNIC TABLE DETAILS)

DRIVEWAY "C-1"

DRIVEWAY "C"

VERIFY IN FIELD SAWCUT & MATCH EXT'G. GRADES TO PROVIDE SMOOTH CONNECTION (L=5'±)

PROVIDE SMOOTH CONNECTION

EXT'G. ASPHALT JOGGING PATH

KIHEI ELEMENTARY & LOKELANI INTERMEDIATE SCHOOLS
STATE OF HAWAII
(OWNER)

LEGEND:

Ext'g 68.52	EXISTING GRADE ELEVATION
FG 68.52	FINISHED GRADE ELEVATION
SW 68.52	FINISHED GRADE AT SIDEWALK
TW 68.52	FINISHED GRADE AT TOP OF WALL
BW 68.52	FINISHED GRADE AT BOTTOM OF WALL
FL 68.52	FINISHED GRADE AT FLOW LINE
TOP 68.52	FINISHED GRADE AT TOP OF STRUCTURE
HP 68.52	FINISHED GRADE AT HIGH POINT
RIM 68.52	FINISHED GRADE AT TOP OF MANHOLE
AC 68.52	FINISHED GRADE AT TOP ASPHALT
TG 68.52	FINISHED GRADE AT TOP GRATE
TC 68.52	FINISHED GRADE AT TOP CURB
	FLOW DIRECTION
	DETECTABLE WARNING ON CURB RAMPS. (SEE DET. SHT. C10.02)
	GRADE BREAK/RIDGELINE

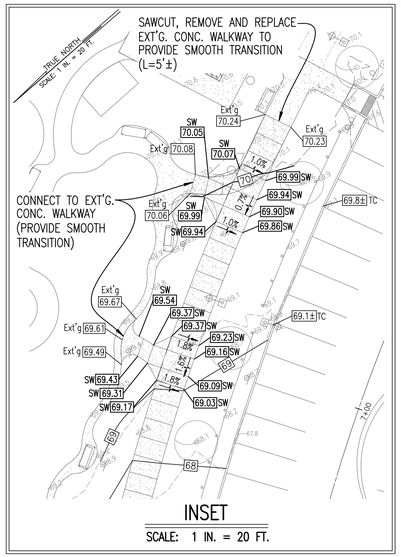

INSET
SCALE: 1 IN. = 20 FT.

NOTES:

1. FINISH GRADE SPOT ELEVATIONS, INDICATED ON CONSTRUCTION PLANS, SHALL BE USED FOR THE PURPOSE OF DETERMINING INITIAL PROFILE. CONTRACTOR SHALL MADE FIELD ADJUSTMENTS, AS REQUIRED, SO THAT THE FINAL PROFILE GRADES, AND CROSS SLOPES WILL PRODUCE THE DESIRED DRAINAGE PATTERN AS INDICATED ON THE CONSTRUCTION PLANS AND MAINTAIN POSITIVE DRAINAGE IN ALL DIRECTIONS. ALL TRANSITIONS SHALL BE SMOOTH.
2. EXISTING GRADES SHALL BE VERIFIED BY THE CONTRACTOR BEFORE PROCEEDING WITH GRADING WORK. SHOULD ANY DISCREPANCIES BE DISCOVERED IN THE EXISTING GRADES OR DIMENSIONS GIVEN ON THE PLANS, THE CONTRACTOR SHALL IMMEDIATELY NOTIFY THE ENGINEER BEFORE PROCEEDING FURTHER WITH ANY WORK, OTHERWISE HE WILL BE HELD RESPONSIBLE FOR ANY COSTS INVOLVED IN CORRECTION OF CONSTRUCTION PLACED DUE TO SUCH DISCREPANCIES.
3. SEE LEGEND ON SHT. C2.01.
4. SEE NOTES ON SHTS. C2.03 TO C2.05.
5. ALL ELEVATIONS REFLECT FINISHED GRADE OF ASPHALT PAVEMENT (TOE OF CURB) UNLESS OTHERWISE INDICATED.
6. ADJUST ALL EXISTING IMPROVEMENTS TO BE RETAINED (INCLUDING BUT NOT LIMITED TO, HANDHOLES, MANHOLES, VALVES, VALVE BOXES, HYDRANTS, LIGHT POLES, LANDSCAPE IRRIGATION, ETC.) TO NEW FINISHED GRADE.
7. SEE SHTS. C6.01 – C6.02 FOR CURB RAMP DETAILS.

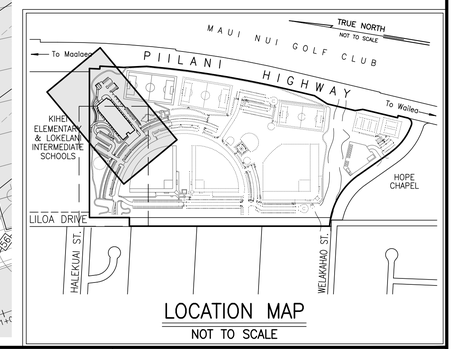

LOCATION MAP
NOT TO SCALE

REVISION	DESCRIPTION	DATE

CLIFFORD N. MUKAI
LICENSED PROFESSIONAL ENGINEER
NO. 6667-C
HAWAII, U.S.A.

License Expires: April 30, 2018
SIGNATURE DATE

THIS WORK WAS PREPARED BY ME OR UNDER MY SUPERVISION AND CONSTRUCTION OF THIS PROJECT WILL BE UNDER MY OBSERVATION "AS DEFINED IN SECTION 16-115-2 OF THE HAWAII ADMINISTRATIVE RULES FOR PROFESSIONAL ENGINEERS, ARCHITECTS, LAND SURVEYORS AND LANDSCAPE ARCHITECTS"

WARREN S. UNEMORI ENGINEERING, INC.
CIVIL & STRUCTURAL ENGINEERS/LAND SURVEYORS
WELLS STREET PROFESSIONAL CENTER, SUITE 403
2145 WELLS STREET, WAILUKU, MAUI, HAWAII 96793

SOUTH MAUI COMMUNITY PARK RECREATION CENTER

PROJECT NO.: P12 / 012 TAX MAP KEY: (2) 2-2-02 : 42
Waiohuli - Keokea (Kihei), Makawao, Maui, Hawaii

TITLE DETAILED GRADING PLAN

B.A.W. DESIGNED BY	C.N.M. CHECKED BY	03031.30 JOB NUMBER	C5.03 SHEET
D.P.T. DRAWN BY	C.N.M. APPROVED BY		OF SHEETS
1 IN. = 20 FT. SCALE		Nov. 1, 2016 DATE	

V:\Projects\03proj\03031.30 - South Maui Comm Park - Gymnasium (ADC)\dwg\compliance\grad-20sc-00.dwg

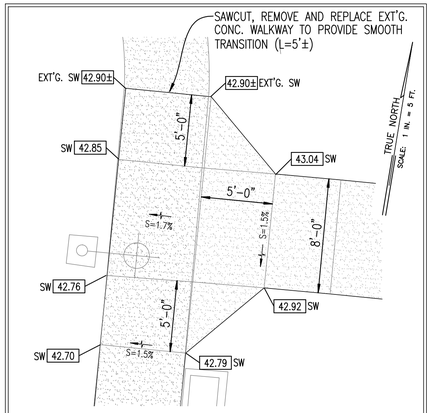

INSET 2

SCALE: 1 IN. = 5 FT.

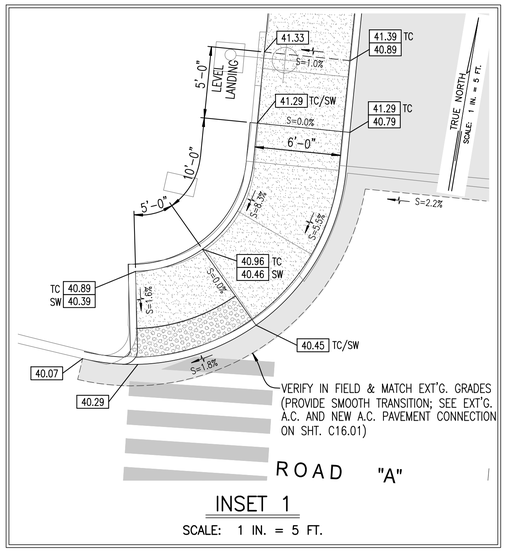

INSET 1

SCALE: 1 IN. = 5 FT.

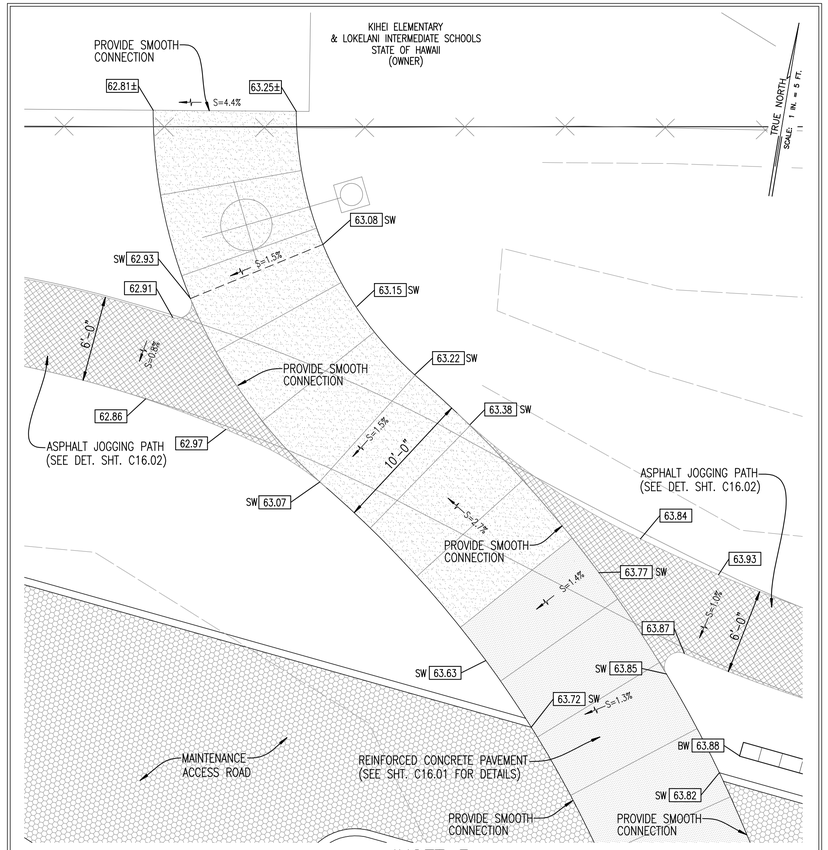

INSET 3

SCALE: 1 IN. = 5 FT.

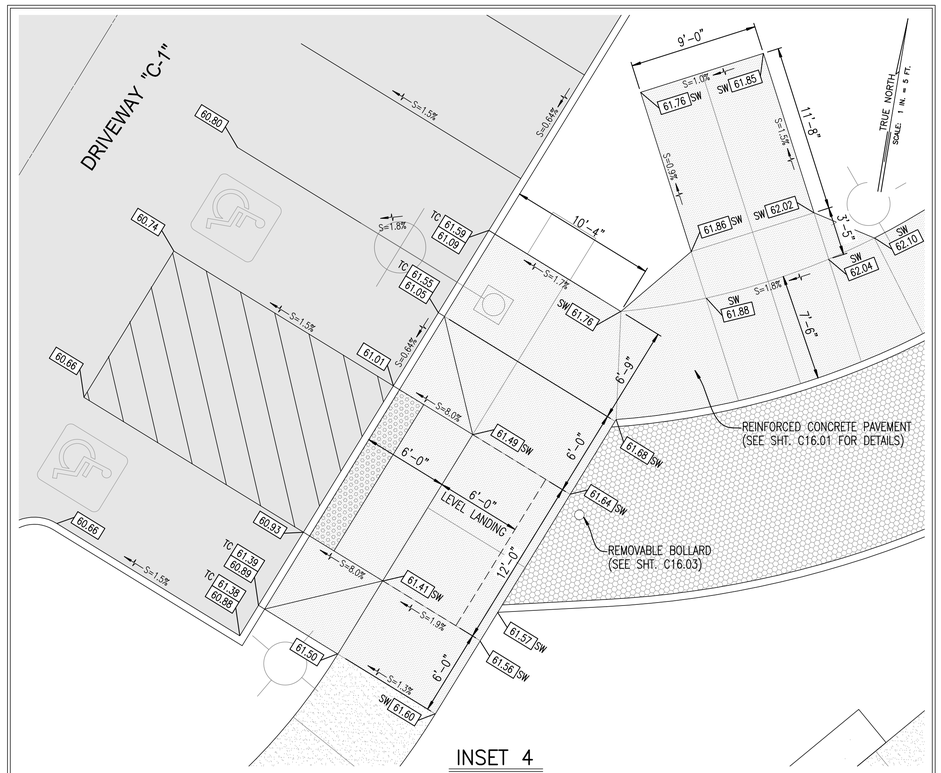

INSET 4

SCALE: 1 IN. = 5 FT.

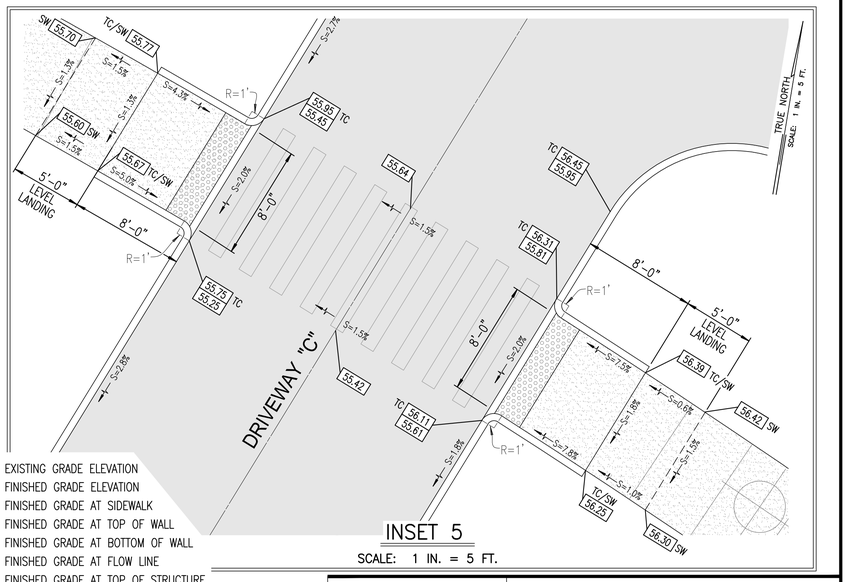

INSET 5

SCALE: 1 IN. = 5 FT.

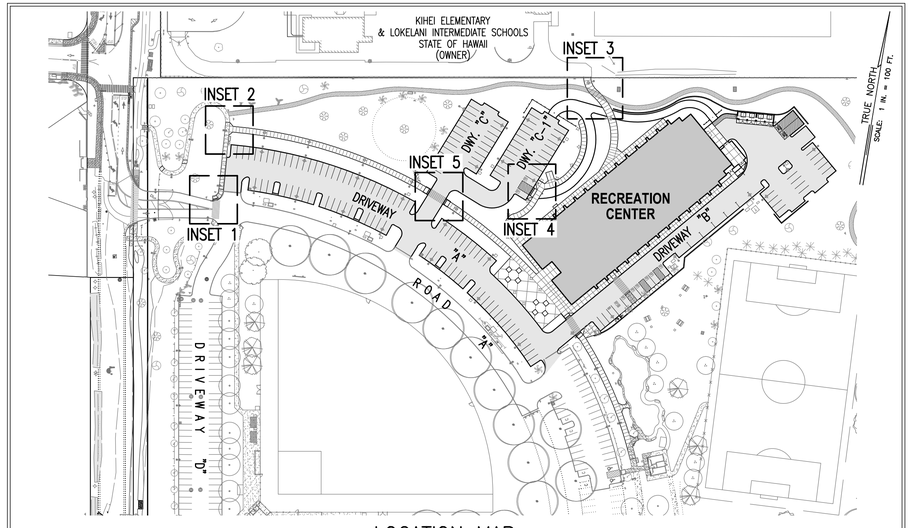

LOCATION MAP

SCALE: 1 IN. = 100 FT.

NOTES:

1. FINISH GRADE SPOT ELEVATIONS, INDICATED ON CONSTRUCTION PLANS, FOR CONCRETE CURB AND GUTTERS SHALL BE USED FOR THE PURPOSE OF DETERMINING INITIAL CONCRETE CURB AND GUTTER PROFILE. CONTRACTOR SHALL MAKE FIELD ADJUSTMENTS AS REQUIRED, DURING CONSTRUCTION, SO THE FINAL PROFILE SATISFIES THE FOLLOWING CONDITIONS:
   A. DRAINAGE PATTERN AS INDICATED ON CONSTRUCTION PLANS SHALL BE MAINTAINED.
   B. PROFILE OF TRANSITION ALONG CONCRETE CURB AND GUTTER FROM STREET TO STREET SHALL BE UNIFORM AND SMOOTH. UPON COMPLETION OF LAYOUT OF THE INITIAL CONCRETE CURB AND GUTTER PROFILE, CONTRACTOR SHALL CONTACT ENGINEER FOR APPROVAL, PRIOR TO PROCEEDING WITH ANY FURTHER WORK, OTHERWISE ANY CORRECTIVE WORK REQUIRED BY THE ENGINEER WILL BE DONE AT CONTRACTOR'S EXPENSE.
2. SIGNS SHALL BE IN ACCORDANCE WITH THE MANUAL ON UNIFORM TRAFFIC CONTROL DEVICES & MAUI COUNTY TRAFFIC CODE.
3. EXISTING LONGITUDINAL DRAINAGE PATTERN SHOWN ON INTERSECTION DETAILS SHALL BE MAINTAINED AT ALL TIMES.
4. DURING EXISTING SIDEWALK AND SHOULDER IMPROVEMENTS, THE CONTRACTOR SHALL PROVIDE NECESSARY ADJUSTMENTS TO ACCOMMODATE BICYCLIST AND PEDESTRIANS AND SHALL MAINTAIN AN ACCESSIBLE ROUTE AT ALL TIMES.
5. ALL EXISTING STRIPING AND PAVEMENT MARKINGS CONFLICTING WITH OR SUPERSEDED BY NEW STRIPING AND/OR PAVEMENT MARKINGS SHALL BE REMOVED AND OBLITERATED (UNLESS OTHERWISE SPECIFIED ON PLANS).
6. THIS SHEET IS SOLELY INTENDED TO PRESENT THE CONSTRUCTION OF CURB RAMPS.
7. SEE SHEETS C10.01 THRU C10.04 FOR STRIPING PLAN AND DETAILS.

LEGEND:

Ext'g 68.52	EXISTING GRADE ELEVATION
FG 68.52	FINISHED GRADE ELEVATION
SW 68.52	FINISHED GRADE AT SIDEWALK
TW 68.52	FINISHED GRADE AT TOP OF WALL
BW 68.52	FINISHED GRADE AT BOTTOM OF WALL
FL 68.52	FINISHED GRADE AT FLOW LINE
TOP 68.52	FINISHED GRADE AT TOP OF STRUCTURE
HP 68.52	FINISHED GRADE AT HIGH POINT
RIM 68.52	FINISHED GRADE AT TOP OF MANHOLE
AC 68.52	FINISHED GRADE AT TOP ASPHALT
TG 68.52	FINISHED GRADE AT TOP GRATE
TC 68.52	FINISHED GRADE AT TOP CURB
	FLOW DIRECTION
	DETECTABLE WARNING ON CURB RAMPS. (SEE DET. SHT. C10.02)
	GRADE BREAK/RIDGELINE

REVISION	DESCRIPTION	DATE

CLIFFORD N. MUKAI
LICENSED PROFESSIONAL ENGINEER
NO. 6667-C
HAWAII, U.S.A.

License Expires: April 30, 2018

SIGNATURE DATE

THIS WORK WAS PREPARED BY ME OR UNDER MY SUPERVISION AND CONSTRUCTION OF THIS PROJECT WILL BE UNDER MY OBSERVATION "AS DEFINED IN SECTION 16-115-2 OF THE HAWAII ADMINISTRATIVE RULES FOR PROFESSIONAL ENGINEERS, ARCHITECTS, LAND SURVEYORS AND LANDSCAPE ARCHITECTS"

WARREN S. UNEMORI ENGINEERING, INC.
CIVIL & STRUCTURAL ENGINEERS/LAND SURVEYORS
WELLS STREET PROFESSIONAL CENTER, SUITE 403
2145 WELLS STREET, WAILUKU, MAUI, HAWAII 96793

SOUTH MAUI COMMUNITY PARK RECREATION CENTER

PROJECT NO.: P12 / 012 TAX MAP KEY: (2) 2-2-02 : 42
Waiohuli - Keokea (Kihei), Makawao, Maui, Hawaii

TITLE INTERSECTION AND CURB RAMP DETAILS

B.A.W. DESIGNED BY	C.N.M. CHECKED BY	03031.30 JOB NUMBER	C6.01 SHEET
D.P.T. DRAWN BY	C.N.M. APPROVED BY	Nov. 1, 2016 DATE	OF SHEETS
AS NOTED SCALE			

11-01-2016 (BID SET)

K:\Projects\03proj\03031.30 - South Maui Comm Park - Gymnasium (ADC)\dwg\compions\inter-09.dwg

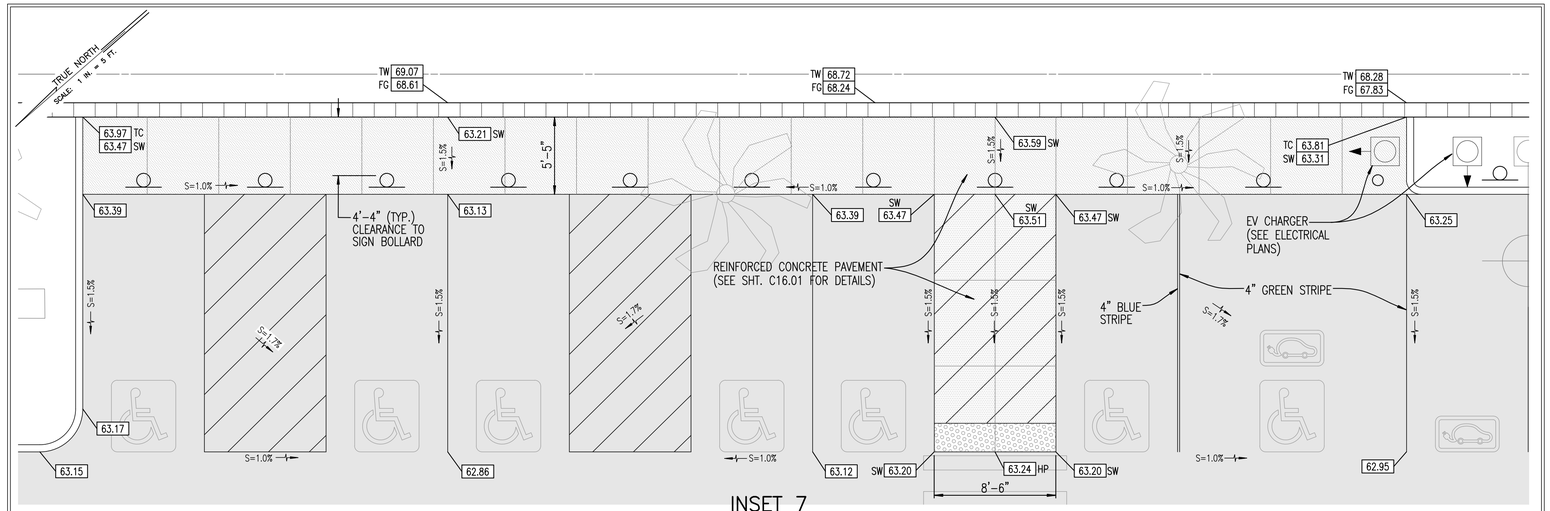

INSET 7

SCALE: 1 IN. = 5 FT.

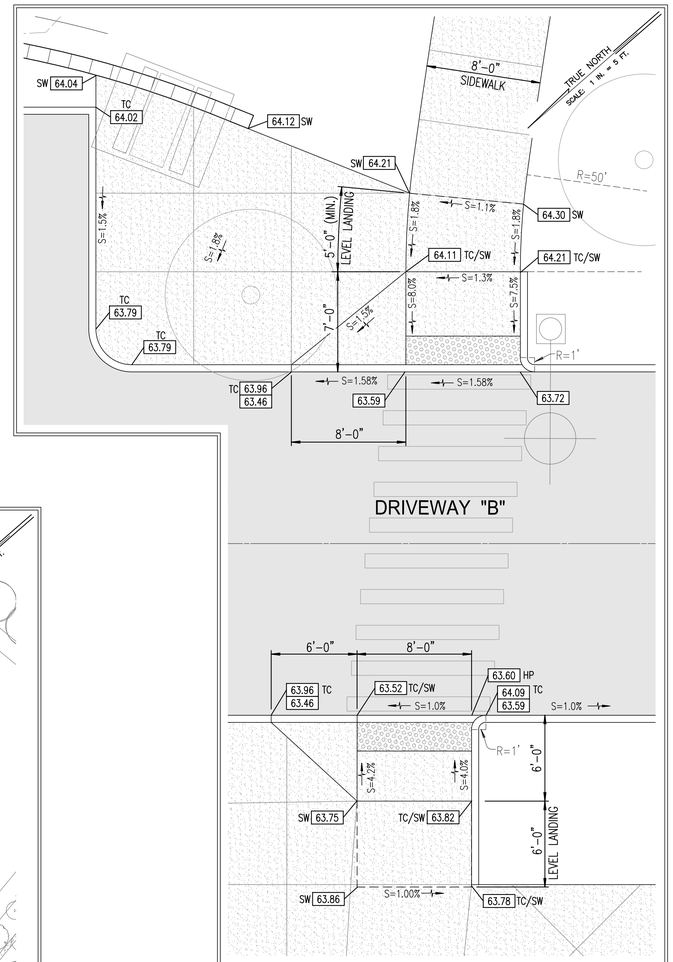

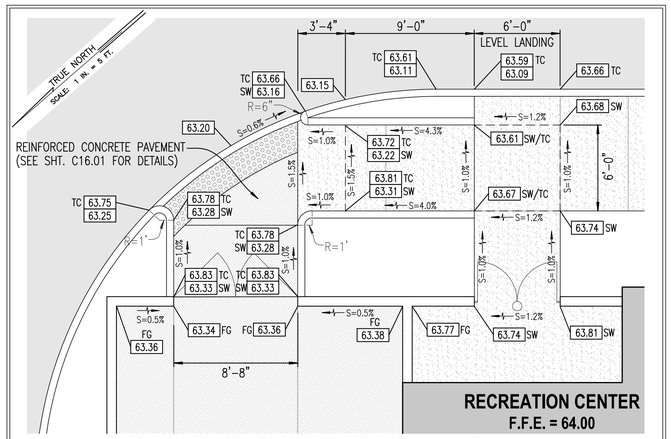

INSET 9

SCALE: 1 IN. = 5 FT.

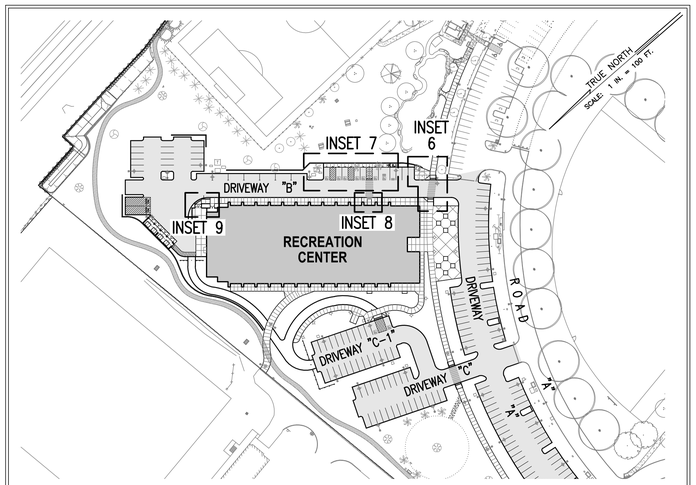

LOCATION MAP

SCALE: 1 IN. = 100 FT.

INSET 6

SCALE: 1 IN. = 5 FT.

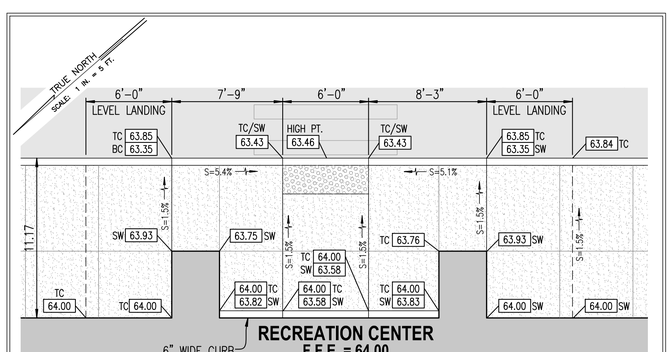

INSET 8

SCALE: 1 IN. = 5 FT.

NOTES:

1. FINISH GRADE SPOT ELEVATIONS, INDICATED ON CONSTRUCTION PLANS, FOR CONCRETE CURB AND GUTTERS SHALL BE USED FOR THE PURPOSE OF DETERMINING INITIAL CONCRETE CURB AND GUTTER PROFILE. CONTRACTOR SHALL MAKE FIELD ADJUSTMENTS AS REQUIRED, DURING CONSTRUCTION, SO THE FINAL PROFILE SATISFIES THE FOLLOWING CONDITIONS:
   A. DRAINAGE PATTERN AS INDICATED ON CONSTRUCTION PLANS SHALL BE MAINTAINED.
   B. PROFILE OF TRANSITION ALONG CONCRETE CURB AND GUTTER FROM STREET TO STREET SHALL BE UNIFORM AND SMOOTH. UPON COMPLETION OF LAYOUT OF THE INITIAL CONCRETE CURB AND GUTTER PROFILE, CONTRACTOR SHALL CONTACT ENGINEER FOR APPROVAL, PRIOR TO PROCEEDING WITH ANY FURTHER WORK, OTHERWISE ANY CORRECTIVE WORK REQUIRED BY THE ENGINEER WILL BE DONE AT CONTRACTOR'S EXPENSE.
2. SIGNS SHALL BE IN ACCORDANCE WITH THE MANUAL ON UNIFORM TRAFFIC CONTROL DEVICES & MAUI COUNTY TRAFFIC CODE.
3. EXISTING LONGITUDINAL DRAINAGE PATTERN SHOWN ON INTERSECTION DETAILS SHALL BE MAINTAINED AT ALL TIMES.
4. DURING EXISTING SIDEWALK AND SHOULDER IMPROVEMENTS, THE CONTRACTOR SHALL PROVIDE NECESSARY ADJUSTMENTS TO ACCOMMODATE BICYCLIST AND PEDESTRIANS AND SHALL MAINTAIN AN ACCESSIBLE ROUTE AT ALL TIMES.
5. ALL EXISTING STRIPING AND PAVEMENT MARKINGS CONFLICTING WITH OR SUPERSEDED BY NEW STRIPING AND/OR PAVEMENT MARKINGS SHALL BE REMOVED AND OBLITERATED (UNLESS OTHERWISE SPECIFIED ON PLANS).
6. THIS SHEET IS SOLELY INTENDED TO PRESENT THE CONSTRUCTION OF CURB RAMPS.
7. SEE SHEETS C10.01 THRU C10.04 FOR STRIPING PLAN AND DETAILS.

LEGEND:

Ext'g 68.52	EXISTING GRADE ELEVATION
FG 68.52	FINISHED GRADE ELEVATION
SW 68.52	FINISHED GRADE AT SIDEWALK
TW 68.52	FINISHED GRADE AT TOP OF WALL
BW 68.52	FINISHED GRADE AT BOTTOM OF WALL
FL 68.52	FINISHED GRADE AT FLOW LINE
TOP 68.52	FINISHED GRADE AT TOP OF STRUCTURE
HP 68.52	FINISHED GRADE AT HIGH POINT
RIM 68.52	FINISHED GRADE AT TOP OF MANHOLE
AC 68.52	FINISHED GRADE AT TOP ASPHALT
TG 68.52	FINISHED GRADE AT TOP GRATE
TC 68.52	FINISHED GRADE AT TOP CURB
	FLOW DIRECTION
	DETECTABLE WARNING ON CURB RAMPS. (SEE DET. SHT. C10.02)
	GRADE BREAK/RIDGELINE

REVISION	DESCRIPTION	DATE

CLIFFORD N. MUKAI
LICENSED PROFESSIONAL ENGINEER
NO. 6667-C
HAWAII, U.S.A.

License Expires: April 30, 2018

SIGNATURE DATE

THIS WORK WAS PREPARED BY ME OR UNDER MY SUPERVISION AND CONSTRUCTION OF THIS PROJECT WILL BE UNDER MY OBSERVATION "AS DEFINED IN SECTION 16-115-2 OF THE HAWAII ADMINISTRATIVE RULES FOR PROFESSIONAL ENGINEERS, ARCHITECTS, LAND SURVEYORS AND LANDSCAPE ARCHITECTS"

WARREN S. UNEMORI ENGINEERING, INC.
CIVIL & STRUCTURAL ENGINEERS/LAND SURVEYORS
WELLS STREET PROFESSIONAL CENTER, SUITE 403
2145 WELLS STREET, WAILUKU, MAUI, HAWAII 96793

SOUTH MAUI COMMUNITY PARK
RECREATION CENTER
PROJECT NO.: P12 / 012 TAX MAP KEY: (2) 2-2-02 : 42
Waiohuli - Keokea (Kihei), Makawao, Maui, Hawaii

TITLE INTERSECTION AND CURB RAMP DETAILS

B.A.W. DESIGNED BY	C.N.M. CHECKED BY	03031.30 JOB NUMBER	C6.02 SHEET OF SHEETS
D.P.T. DRAWN BY	C.N.M. APPROVED BY	Nov. 1, 2016 DATE	
AS NOTED SCALE			

11-01-2016 (BID SET)

V:\Projects\03proj\03031.30 - South Maui Comm Park - Gymnasium (ADC)\dwg\conplans\inter-00.dwg

11-01-2016 (BID SET)

NOTES:

1. OVERHEAD AND UNDERGROUND UTILITIES MAY EXIST ALONG, ACROSS, AND IN THE VICINITY OF THE PROPOSED IMPROVEMENTS AND MAY NOT BE SHOWN ON THE PLANS. CONTRACTOR SHALL BE RESPONSIBLE FOR CONTACTING THE RESPECTIVE COUNTY OR STATE AGENCIES, UTILITIES (INCLUDING WITHOUT LIMITATION MAUI ELECTRIC COMPANY, LTD., HAWAIIAN TELCOM, AND OCEANIC TIME WARNER CABLE OF HAWAII), EXAMINING ANY AVAILABLE RECORD DRAWINGS, TONING OF UNDERGROUND UTILITIES, TEST PITS, AND CONFIRMING THE PRESENCE, DEPTH, SIZE, AND TYPE OF ANY EXISTING UTILITIES ALONG AND ACROSS THE PROPOSED IMPROVEMENTS. CONTRACTOR SHALL NOTIFY AND COORDINATE CONSTRUCTION ACTIVITIES, AND ANY REQUIRED RELOCATION, WITH RESPECTIVE AGENCIES AND UTILITIES.
2. CONTRACTOR SHALL PERFORM A THOROUGH FIELD INVESTIGATION AND ANY EXISTING ITEMS OR IMPROVEMENTS TO BE RETAINED (INCLUDING, BUT NOT LIMITED TO, HANDHOLES, MANHOLES, VALVES, VALVE BOXES, FIRE HYDRANTS, LIGHT POLES, METERS, METER BOXES, LANDSCAPE IRRIGATION, ETC.), WHETHER OR NOT SHOWN ON THE PLANS, SHALL BE ADJUSTED TO NEW FINISH GRADE.
3. LOCATIONS OF EXISTING UTILITIES, AS SHOWN ON PLANS AND/OR PROFILES, ARE APPROXIMATE ONLY, WERE DETERMINED ON THE BEST INFORMATION AVAILABLE, AND ARE BASED ON AVAILABLE CONSTRUCTIONS PLANS FOR SAME, ASSUMING STANDARD MINIMUM COVERS, AND/ OR VISIBLE FIELD FEATURES. CONTRACTOR SHALL CONDUCT A THROUGH FIELD INVESTIGATION TO VERIFY ACTUAL LOCATION, DEPTH, SIZE, AND TYPE OF ALL EXISTING UTILITIES, PRIOR TO COMMENCEMENT OF CONSTRUCTION. SHOULD ANY DISCREPANCIES OCCUR, CONTRACTOR SHALL IMMEDIATELY NOTIFY ENGINEER BEFORE PROCEEDING ANY FURTHER WITH THE WORK.
4. OWNERS OF ADJOINING LANDS, SHOWN ON PLAN, ARE TAKEN FROM RECORDS FILED IN THE REAL PROPERTY MAPPING BRANCH, & ARE SUBJECT TO VERIFICATION.
5. SEE SHEET C2.01 FOR LEGEND AND ABBREVIATIONS.
6. SEE SHEETS C2.03 TO C2.05 FOR ADDITIONAL CONSTRUCTION NOTES.
7. ALL STORM DRAIN INLETS TO HAVE STORM DRAIN MARKER CAST INTO CONCRETE OR AFFIXED TO GRATE, AS APPLICABLE. SEE SHEET C10.02 FOR DETAIL.

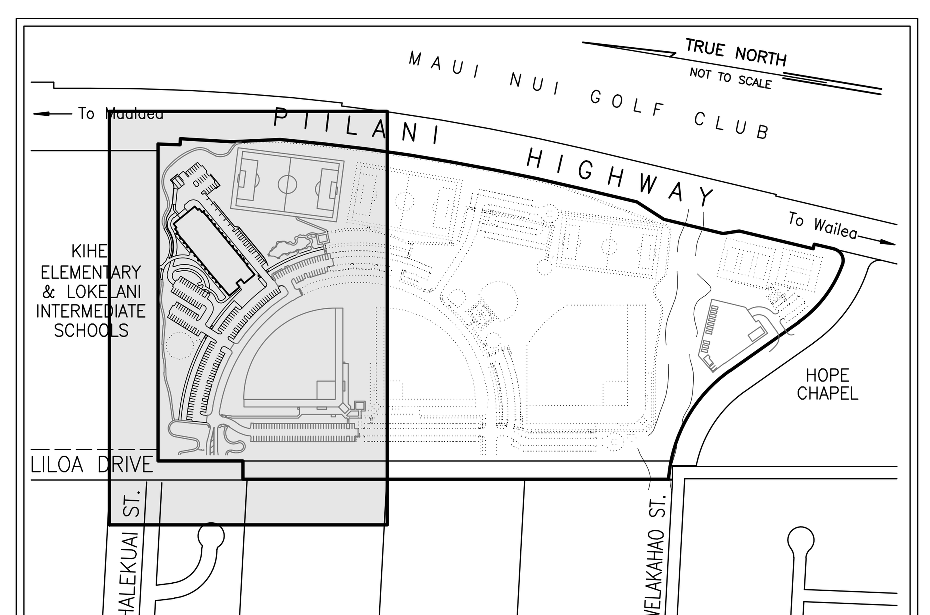

LOCATION MAP
NOT TO SCALE

REVISION	DESCRIPTION	DATE

CLIFFORD N. MUKAI
LICENSED PROFESSIONAL ENGINEER
NO. 6667-C
HAWAII, U.S.A.

SIGNATURE — License Expires: April 30, 2018 — DATE

THIS WORK WAS PREPARED BY ME OR UNDER MY SUPERVISION AND CONSTRUCTION OF THIS PROJECT WILL BE UNDER MY OBSERVATION "AS DEFINED IN SECTION 16-115-2 OF THE HAWAII ADMINISTRATIVE RULES FOR PROFESSIONAL ENGINEERS, ARCHITECTS, LAND SURVEYORS AND LANDSCAPE ARCHITECTS"

WARREN S. UNEMORI ENGINEERING, INC.
CIVIL & STRUCTURAL ENGINEERS/LAND SURVEYORS
WELLS STREET PROFESSIONAL CENTER, SUITE 403
2145 WELLS STREET, WAILUKU, MAUI, HAWAII 96793

SOUTH MAUI COMMUNITY PARK RECREATION CENTER

PROJECT NO.: P12 / 012 TAX MAP KEY: (2) 2-2-02 : 42
Waiohuli - Keokea (Kihei), Makawao, Maui, Hawaii

TITLE GENERAL UTILITY PLAN

B.A.W. DESIGNED BY	C.N.M. CHECKED BY	03031.30 JOB NUMBER	C7.01 SHEET
D.P.T. DRAWN BY	C.N.M. APPROVED BY	Nov. 1, 2016 DATE	OF SHEETS
SCALE AS NOTED			

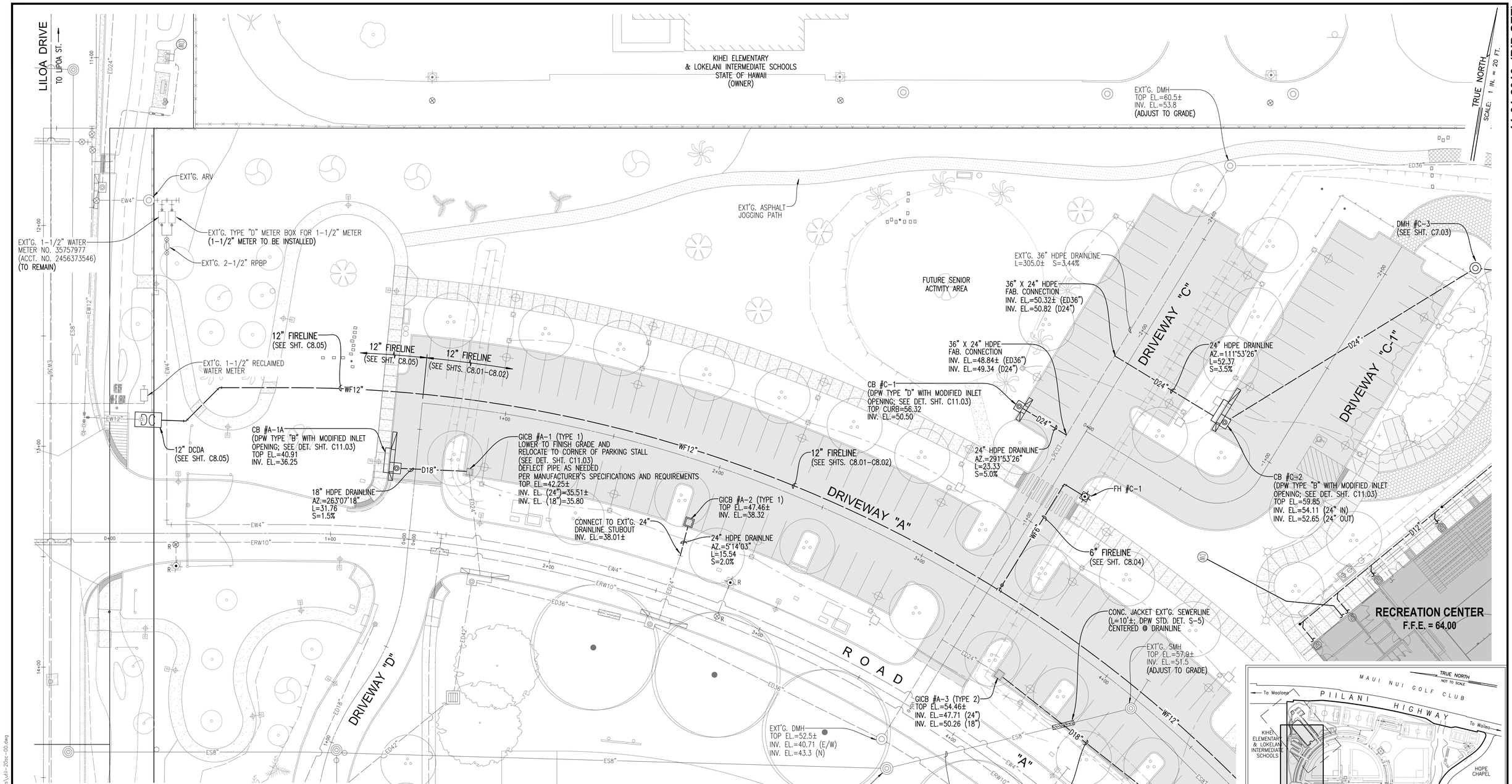

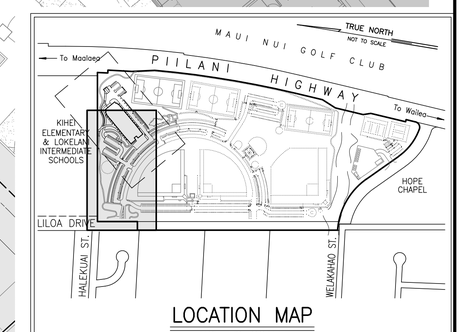

LOCATION MAP
NOT TO SCALE

NOTES:

1. OVERHEAD AND UNDERGROUND UTILITIES MAY EXIST ALONG, ACROSS, AND IN THE VICINITY OF THE PROPOSED IMPROVEMENTS AND MAY NOT BE SHOWN ON THE PLANS. CONTRACTOR SHALL BE RESPONSIBLE FOR CONTACTING THE RESPECTIVE COUNTY OR STATE AGENCIES, UTILITIES (INCLUDING WITHOUT LIMITATION MAUI ELECTRIC COMPANY, LTD., HAWAIIAN TELCOM, AND OCEANIC TIME WARNER CABLE OF HAWAII), EXAMINING ANY AVAILABLE RECORD DRAWINGS, TONING OF UNDERGROUND UTILITIES, TEST PITS, AND CONFIRMING THE PRESENCE, DEPTH, SIZE, AND TYPE OF ANY EXISTING UTILITIES ALONG AND ACROSS THE PROPOSED IMPROVEMENTS. CONTRACTOR SHALL NOTIFY AND COORDINATE CONSTRUCTION ACTIVITIES, AND ANY REQUIRED RELOCATION, WITH RESPECTIVE AGENCIES AND UTILITIES.
2. CONTRACTOR SHALL PERFORM A THOROUGH FIELD INVESTIGATION AND ANY EXISTING ITEMS OR IMPROVEMENTS TO BE RETAINED (INCLUDING, BUT NOT LIMITED TO, HANDHOLES, MANHOLES, VALVES, VALVE BOXES, FIRE HYDRANTS, LIGHT POLES, METERS, METER BOXES, LANDSCAPE IRRIGATION, ETC.), WHETHER OR NOT SHOWN ON THE PLANS, SHALL BE ADJUSTED TO NEW FINISH GRADE.
3. LOCATIONS OF EXISTING UTILITIES, AS SHOWN ON PLANS AND/OR PROFILES, ARE APPROXIMATE ONLY, WERE DETERMINED ON THE BEST INFORMATION AVAILABLE, AND ARE BASED ON AVAILABLE CONSTRUCTIONS PLANS FOR SAME, ASSUMING STANDARD MINIMUM COVERS, AND/ OR VISIBLE FIELD FEATURES. CONTRACTOR SHALL CONDUCT A THROUGH FIELD INVESTIGATION TO VERIFY ACTUAL LOCATION, DEPTH, SIZE, AND TYPE OF ALL EXISTING UTILITIES, PRIOR TO COMMENCEMENT OF CONSTRUCTION. SHOULD ANY DISCREPANCIES OCCUR, CONTRACTOR SHALL IMMEDIATELY NOTIFY ENGINEER BEFORE PROCEEDING ANY FURTHER WITH THE WORK.
4. OWNERS OF ADJOINING LANDS, SHOWN ON PLAN, ARE TAKEN FROM RECORDS FILED IN THE REAL PROPERTY MAPPING BRANCH, & ARE SUBJECT TO VERIFICATION.
5. SEE SHEET C2.01 FOR LEGEND AND ABBREVIATIONS.
6. SEE SHEETS C2.03 TO C2.05 FOR ADDITIONAL CONSTRUCTION NOTES.

REVISION	DESCRIPTION	DATE

CLIFFORD N. MUKAI
LICENSED PROFESSIONAL ENGINEER
NO. 6667-C
HAWAII, U.S.A.

SIGNATURE — DATE — License Expires: April 30, 2018

THIS WORK WAS PREPARED BY ME OR UNDER MY SUPERVISION AND CONSTRUCTION OF THIS PROJECT WILL BE UNDER MY OBSERVATION "AS DEFINED IN SECTION 16-115-2 OF THE HAWAII ADMINISTRATIVE RULES FOR PROFESSIONAL ENGINEERS, ARCHITECTS, LAND SURVEYORS AND LANDSCAPE ARCHITECTS"

WARREN S. UNEMORI ENGINEERING, INC.
CIVIL & STRUCTURAL ENGINEERS/LAND SURVEYORS
WELLS STREET PROFESSIONAL CENTER, SUITE 403
2145 WELLS STREET, WAILUKU, MAUI, HAWAII 96793

SOUTH MAUI COMMUNITY PARK
RECREATION CENTER
PROJECT NO.: P12 / 012 TAX MAP KEY: (2) 2-2-02 : 42
Waiohuli - Keokea (Kihei), Makawao, Maui, Hawaii

TITLE DETAILED UTILITY PLAN

B.A.W. DESIGNED BY	C.N.M. CHECKED BY	03031.30 JOB NUMBER	C7.02 SHEET
D.P.T. DRAWN BY	C.N.M. APPROVED BY	Nov. 1, 2016 DATE	OF SHEETS
AS NOTED SCALE			

11-01-2016 (BID SET)

W:\Projects\02proj\03031.30 - South Maui Comm Park - Gymnasium (ADC)\dwg\compians\ut8-20sc-00.dwg

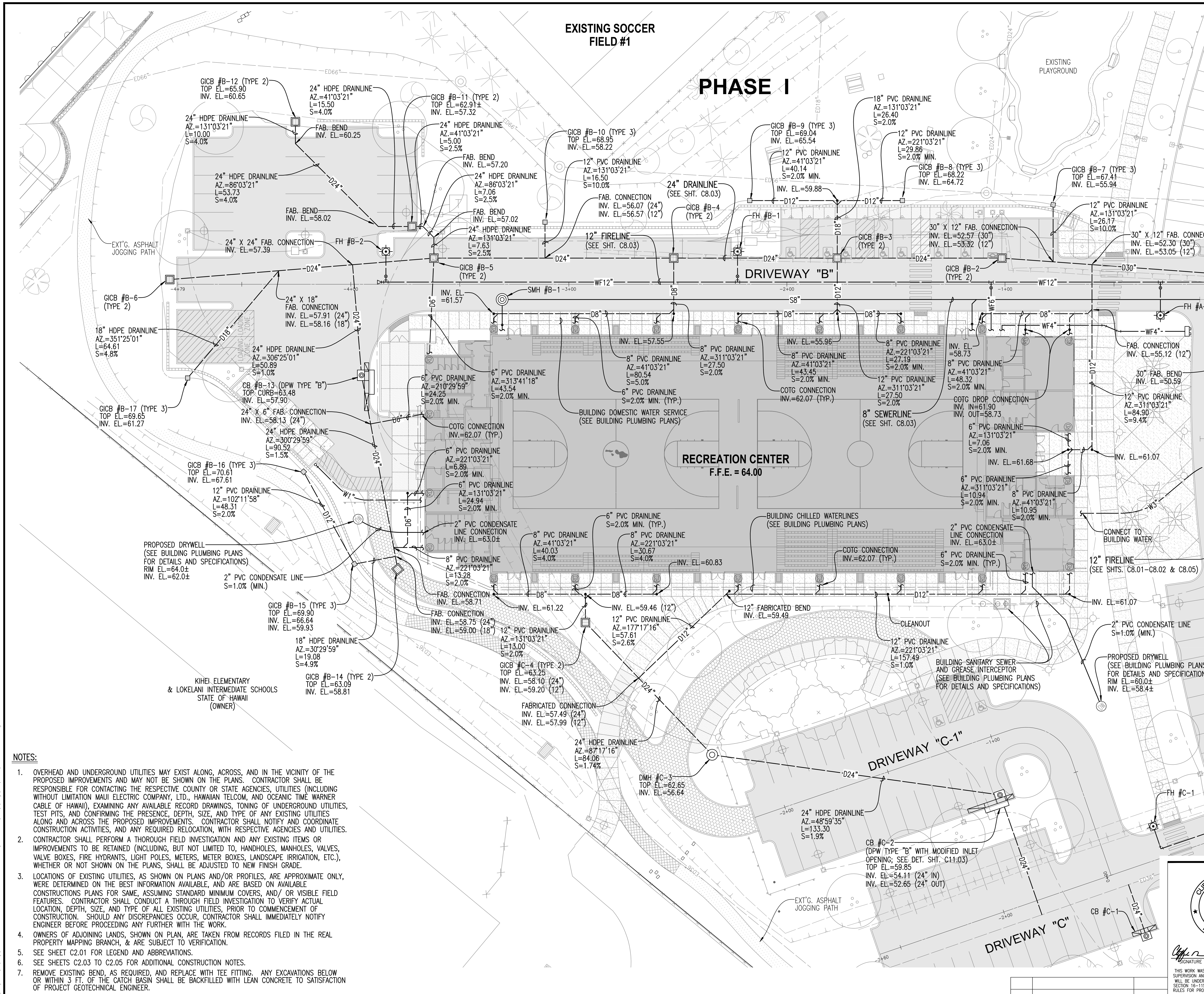

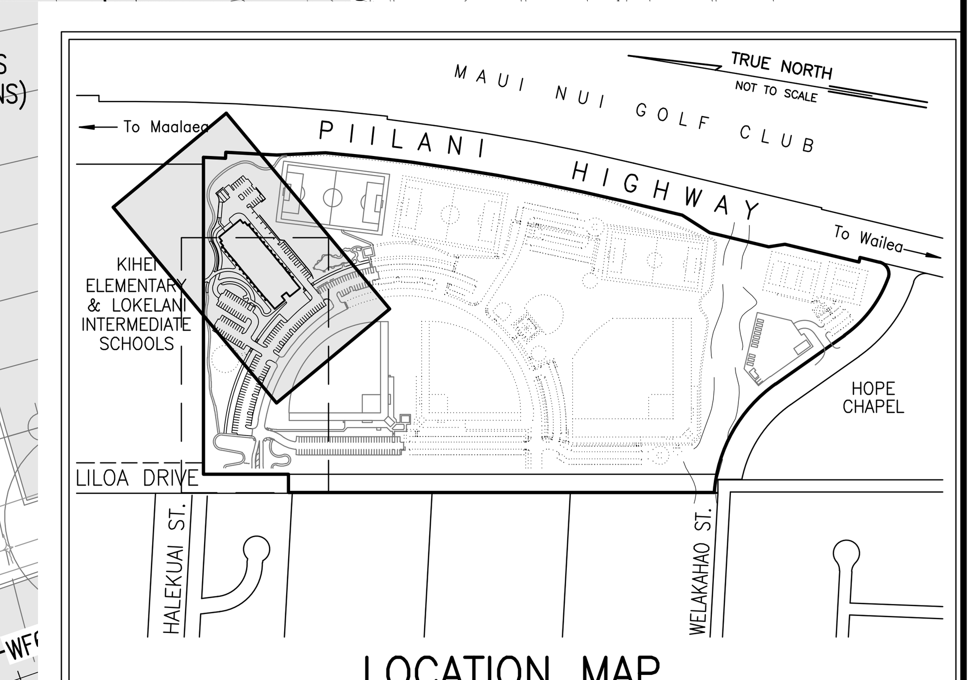

LOCATION MAP

NOT TO SCALE

NOTES:

1. OVERHEAD AND UNDERGROUND UTILITIES MAY EXIST ALONG, ACROSS, AND IN THE VICINITY OF THE PROPOSED IMPROVEMENTS AND MAY NOT BE SHOWN ON THE PLANS. CONTRACTOR SHALL BE RESPONSIBLE FOR CONTACTING THE RESPECTIVE COUNTY OR STATE AGENCIES, UTILITIES (INCLUDING WITHOUT LIMITATION MAUI ELECTRIC COMPANY, LTD., HAWAIIAN TELCOM, AND OCEANIC TIME WARNER CABLE OF HAWAII), EXAMINING ANY AVAILABLE RECORD DRAWINGS, TONING OF UNDERGROUND UTILITIES, TEST PITS, AND CONFIRMING THE PRESENCE, DEPTH, SIZE, AND TYPE OF ANY EXISTING UTILITIES ALONG AND ACROSS THE PROPOSED IMPROVEMENTS. CONTRACTOR SHALL NOTIFY AND COORDINATE CONSTRUCTION ACTIVITIES, AND ANY REQUIRED RELOCATION, WITH RESPECTIVE AGENCIES AND UTILITIES.
2. CONTRACTOR SHALL PERFORM A THOROUGH FIELD INVESTIGATION AND ANY EXISTING ITEMS OR IMPROVEMENTS TO BE RETAINED (INCLUDING, BUT NOT LIMITED TO, HANDHOLES, MANHOLES, VALVES, VALVE BOXES, FIRE HYDRANTS, LIGHT POLES, METERS, METER BOXES, LANDSCAPE IRRIGATION, ETC.), WHETHER OR NOT SHOWN ON THE PLANS, SHALL BE ADJUSTED TO NEW FINISH GRADE.
3. LOCATIONS OF EXISTING UTILITIES, AS SHOWN ON PLANS AND/OR PROFILES, ARE APPROXIMATE ONLY, WERE DETERMINED ON THE BEST INFORMATION AVAILABLE, AND ARE BASED ON AVAILABLE CONSTRUCTIONS PLANS FOR SAME, ASSUMING STANDARD MINIMUM COVERS, AND/ OR VISIBLE FIELD FEATURES. CONTRACTOR SHALL CONDUCT A THROUGH FIELD INVESTIGATION TO VERIFY ACTUAL LOCATION, DEPTH, SIZE, AND TYPE OF ALL EXISTING UTILITIES, PRIOR TO COMMENCEMENT OF CONSTRUCTION. SHOULD ANY DISCREPANCIES OCCUR, CONTRACTOR SHALL IMMEDIATELY NOTIFY ENGINEER BEFORE PROCEEDING ANY FURTHER WITH THE WORK.
4. OWNERS OF ADJOINING LANDS, SHOWN ON PLAN, ARE TAKEN FROM RECORDS FILED IN THE REAL PROPERTY MAPPING BRANCH, & ARE SUBJECT TO VERIFICATION.
5. SEE SHEET C2.01 FOR LEGEND AND ABBREVIATIONS.
6. SEE SHEETS C2.03 TO C2.05 FOR ADDITIONAL CONSTRUCTION NOTES.
7. REMOVE EXISTING BEND, AS REQUIRED, AND REPLACE WITH TEE FITTING. ANY EXCAVATIONS BELOW OR WITHIN 3 FT. OF THE CATCH BASIN SHALL BE BACKFILLED WITH LEAN CONCRETE TO SATISFACTION OF PROJECT GEOTECHNICAL ENGINEER.

CLIFFORD N. MUKAI — LICENSED PROFESSIONAL ENGINEER — NO. 6667-C — HAWAII, U.S.A.

License Expires: April 30, 2018

SIGNATURE DATE

THIS WORK WAS PREPARED BY ME OR UNDER MY SUPERVISION AND CONSTRUCTION OF THIS PROJECT WILL BE UNDER MY OBSERVATION "AS DEFINED IN SECTION 16-115-2 OF THE HAWAII ADMINISTRATIVE RULES FOR PROFESSIONAL ENGINEERS, ARCHITECTS, LAND SURVEYORS AND LANDSCAPE ARCHITECTS"

WARREN S. UNEMORI ENGINEERING, INC.
CIVIL & STRUCTURAL ENGINEERS/LAND SURVEYORS
WELLS STREET PROFESSIONAL CENTER, SUITE 403
2145 WELLS STREET, WAILUKU, MAUI, HAWAII 96793

SOUTH MAUI COMMUNITY PARK
RECREATION CENTER

PROJECT NO.: P12 / 012 TAX MAP KEY: (2) 2-2-02 : 42
Waiohuli - Keokea (Kihei), Makawao, Maui, Hawaii

TITLE DETAILED UTILITY PLAN

B.A.W. DESIGNED BY	C.N.M. CHECKED BY	03031.30 JOB NUMBER	C7.03 SHEET	
D.P.T. DRAWN BY	C.N.M. APPROVED BY	Nov. 1, 2016 DATE	OF SHEETS	
SCALE AS NOTED				

REVISION	DESCRIPTION	DATE

V:\Projects\03pro\03031.30 - South Maui Comm Park - Gymnasium (ADC)\dwg\conplans\util-20sc-00.dwg

11-01-2016 (BID SET)

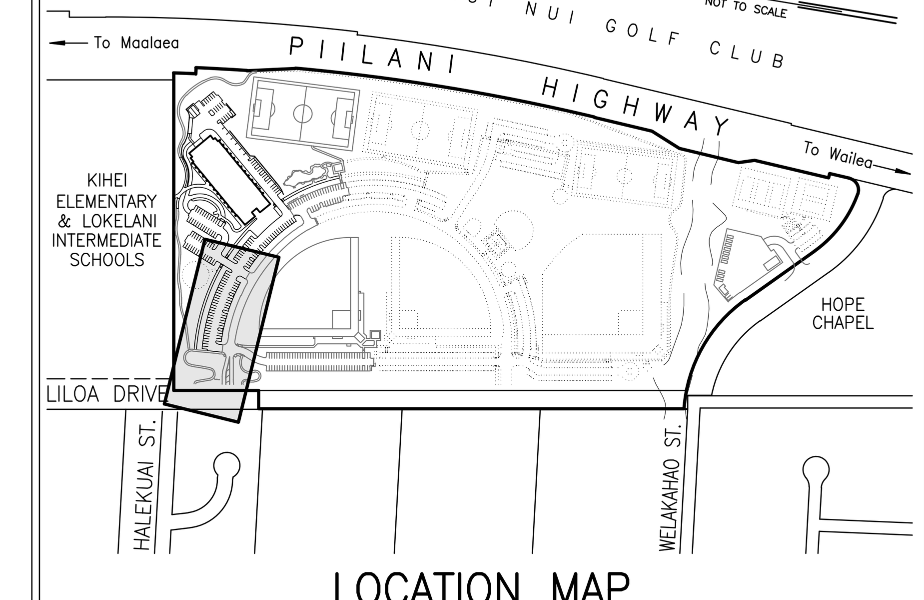

LOCATION MAP
NOT TO SCALE

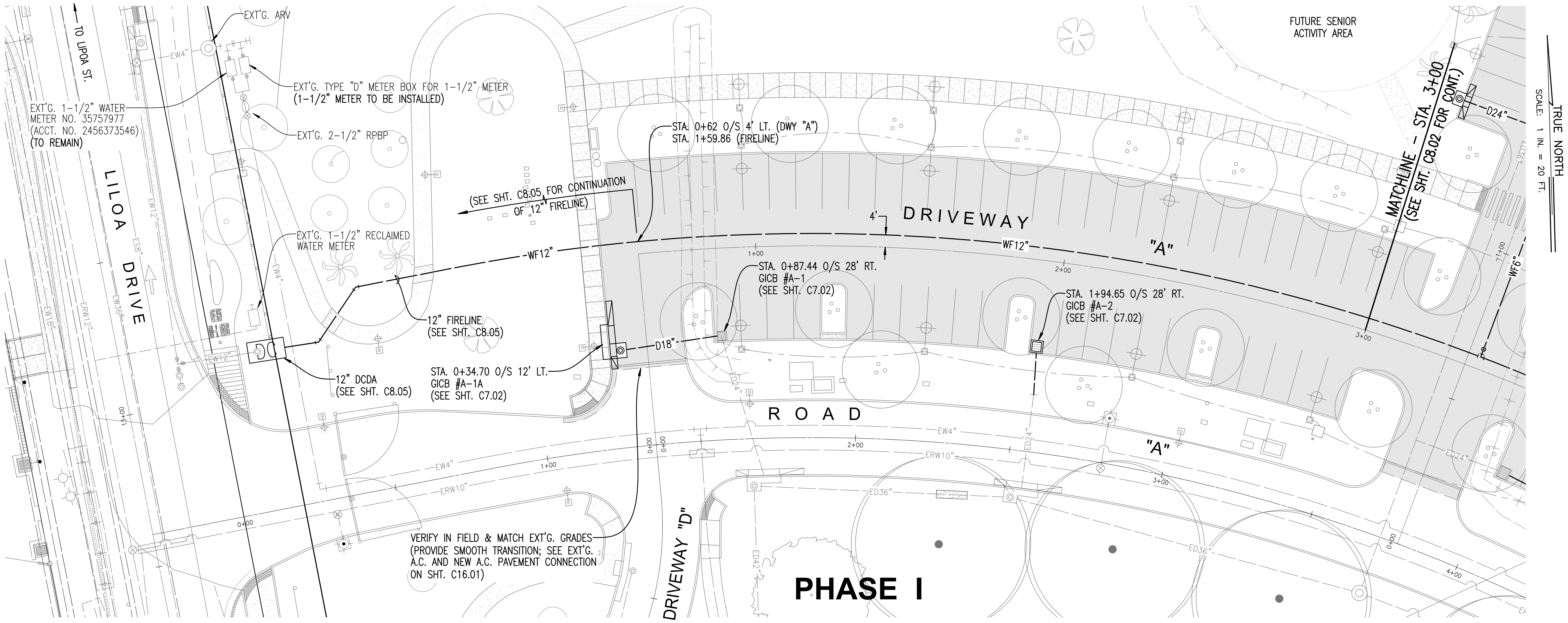

PLAN
SCALE: 1 IN. = 20 FT.

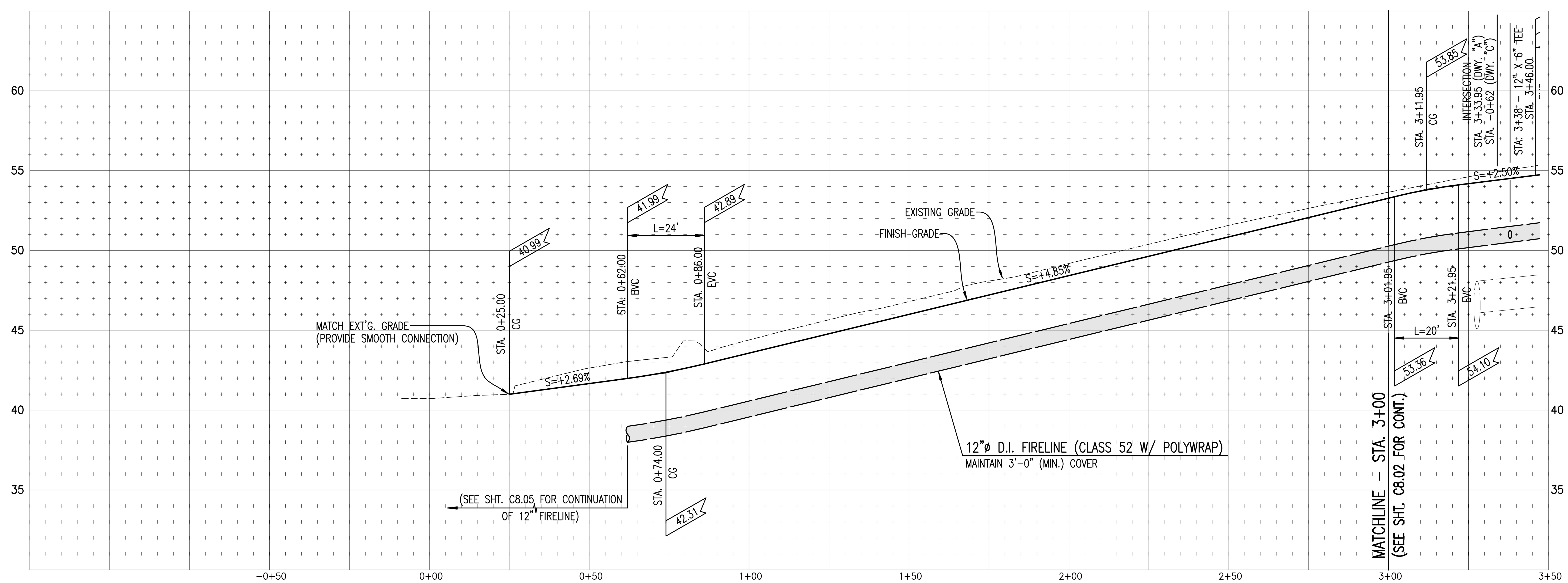

PROFILE - DRIVEWAY "A"
SCALE: HORIZ. 1" = 20'
VERT. 1" = 4'

NOTES:

1. OVERHEAD AND UNDERGROUND UTILITIES MAY EXIST ALONG, ACROSS, AND IN THE VICINITY OF THE PROPOSED IMPROVEMENTS AND MAY NOT BE SHOWN ON THE PLANS. CONTRACTOR SHALL BE RESPONSIBLE FOR CONTACTING THE RESPECTIVE COUNTY OR STATE AGENCIES, UTILITIES (INCLUDING WITHOUT LIMITATION MAUI ELECTRIC COMPANY, LTD., HAWAIIAN TELCOM, AND OCEANIC TIME WARNER CABLE OF HAWAII), EXAMINING ANY AVAILABLE RECORD DRAWINGS, TONING OF UNDERGROUND UTILITIES, TEST PITS, AND CONFIRMING THE PRESENCE, DEPTH, SIZE, AND TYPE OF ANY EXISTING UTILITIES ALONG AND ACROSS THE PROPOSED IMPROVEMENTS. CONTRACTOR SHALL NOTIFY AND COORDINATE CONSTRUCTION ACTIVITIES, AND ANY REQUIRED RELOCATION, WITH RESPECTIVE AGENCIES AND UTILITIES.
2. CONTRACTOR SHALL PERFORM A THOROUGH FIELD INVESTIGATION AND ANY EXISTING ITEMS OR IMPROVEMENTS TO BE RETAINED (INCLUDING, BUT NOT LIMITED TO, HANDHOLES, MANHOLES, VALVES, VALVE BOXES, FIRE HYDRANTS, LIGHT POLES, METERS, METER BOXES, LANDSCAPE IRRIGATION, ETC.), WHETHER OR NOT SHOWN ON THE PLANS, SHALL BE ADJUSTED TO NEW FINISH GRADE.
3. LOCATIONS OF EXISTING UTILITIES, AS SHOWN ON PLANS AND/OR PROFILES, ARE APPROXIMATE ONLY, WERE DETERMINED ON THE BEST INFORMATION AVAILABLE, AND ARE BASED ON AVAILABLE CONSTRUCTIONS PLANS FOR SAME, ASSUMING STANDARD MINIMUM COVERS, AND/ OR VISIBLE FIELD FEATURES. CONTRACTOR SHALL CONDUCT A THROUGH FIELD INVESTIGATION TO VERIFY ACTUAL LOCATION, DEPTH, SIZE, AND TYPE OF ALL EXISTING UTILITIES, PRIOR TO COMMENCEMENT OF CONSTRUCTION. SHOULD ANY DISCREPANCIES OCCUR, CONTRACTOR SHALL IMMEDIATELY NOTIFY ENGINEER BEFORE PROCEEDING ANY FURTHER WITH THE WORK.
4. OWNERS OF ADJOINING LANDS, SHOWN ON PLAN, ARE TAKEN FROM RECORDS FILED IN THE REAL PROPERTY MAPPING BRANCH, & ARE SUBJECT TO VERIFICATION.
5. SEE SHEET C2.01 FOR LEGEND AND ABBREVIATIONS.
6. SEE SHEETS C2.03 TO C2.05 FOR ADDITIONAL CONSTRUCTION NOTES.

CLIFFORD N. MUKAI
LICENSED PROFESSIONAL ENGINEER
NO. 6667-C
HAWAII, U.S.A.

License Expires: April 30, 2018

SIGNATURE DATE

THIS WORK WAS PREPARED BY ME OR UNDER MY SUPERVISION AND CONSTRUCTION OF THIS PROJECT WILL BE UNDER MY OBSERVATION "AS DEFINED IN SECTION 16-115-2 OF THE HAWAII ADMINISTRATIVE RULES FOR PROFESSIONAL ENGINEERS, ARCHITECTS, LAND SURVEYORS AND LANDSCAPE ARCHITECTS"

WARREN S. UNEMORI ENGINEERING, INC.
CIVIL & STRUCTURAL ENGINEERS/LAND SURVEYORS
WELLS STREET PROFESSIONAL CENTER, SUITE 403
2145 WELLS STREET, WAILUKU, MAUI, HAWAII 96793

SOUTH MAUI COMMUNITY PARK RECREATION CENTER
PROJECT NO.: P12 / 012 TAX MAP KEY: (2) 2-2-02 : 42
Waiohuli - Keokea (Kihei), Makawao, Maui, Hawaii

TITLE PLAN & PROFILE: DRIVEWAY "A"

B.A.W. DESIGNED BY	C.N.M. CHECKED BY	03031.30 JOB NUMBER	C8.01 SHEET
D.P.T. DRAWN BY	C.N.M. APPROVED BY	Nov. 1, 2016 DATE	OF SHEETS
SCALE AS NOTED			

REVISION	DESCRIPTION	DATE

11-01-2016 (BID SET)

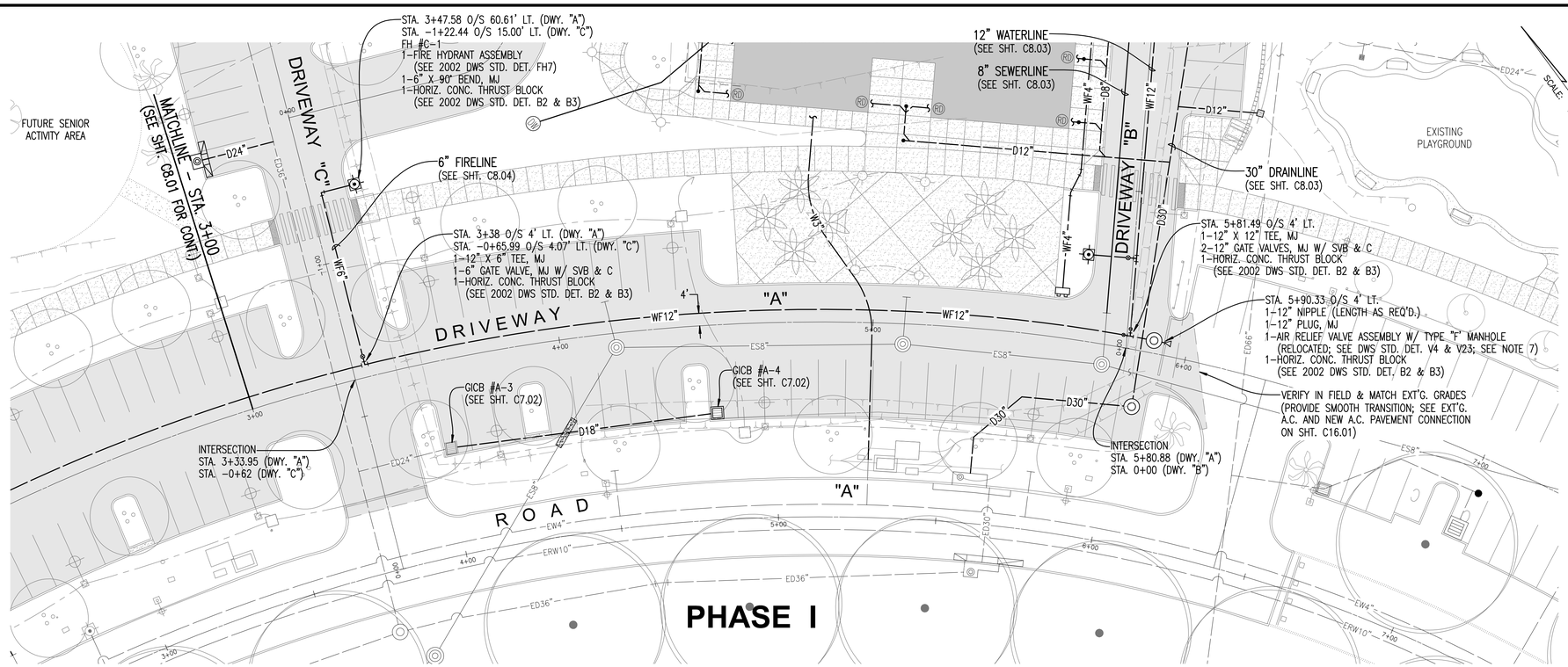

PLAN
SCALE: 1 IN. = 20 FT.

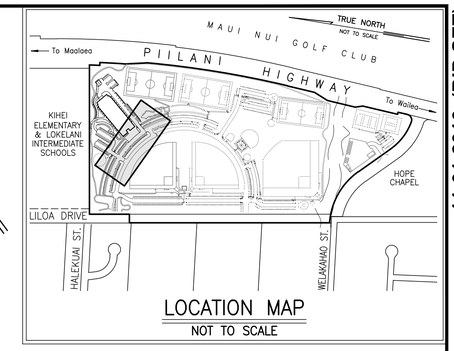

LOCATION MAP
NOT TO SCALE

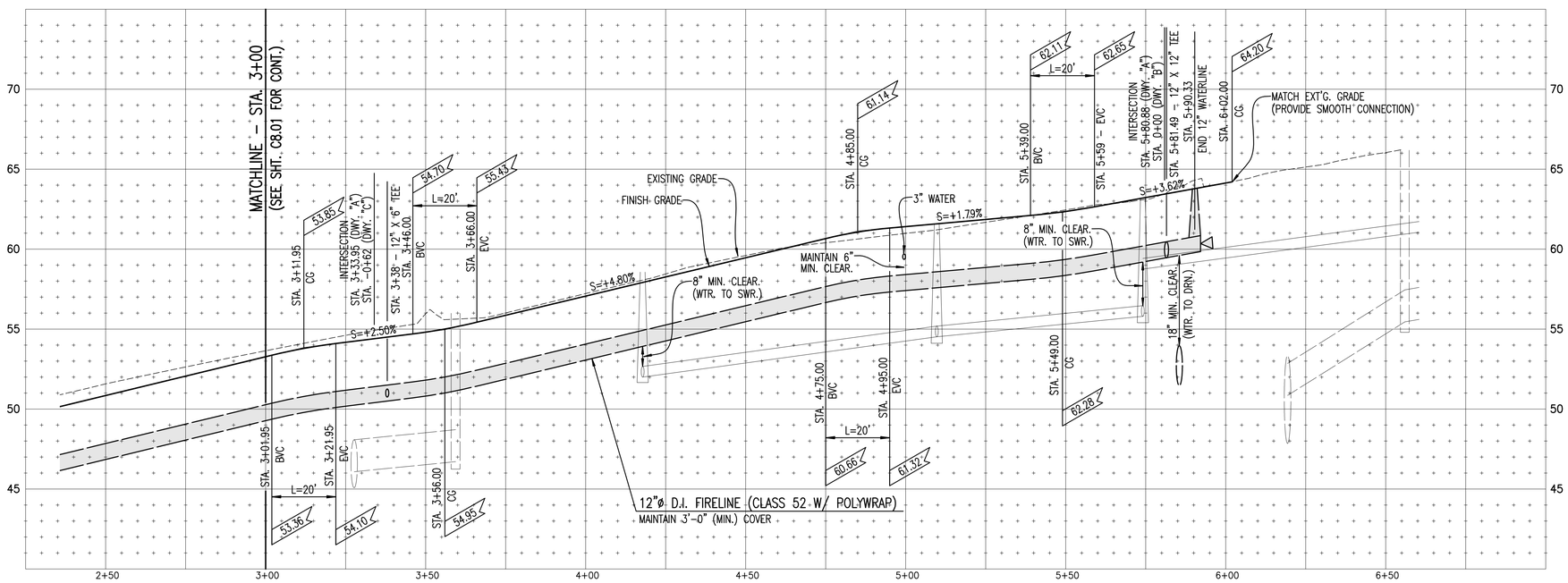

PROFILE – DRIVEWAY "A"
SCALE: HORIZ. 1" = 20'
VERT. 1" = 4'

NOTES:

1. OVERHEAD AND UNDERGROUND UTILITIES MAY EXIST ALONG, ACROSS, AND IN THE VICINITY OF THE PROPOSED IMPROVEMENTS AND MAY NOT BE SHOWN ON THE PLANS. CONTRACTOR SHALL BE RESPONSIBLE FOR CONTACTING THE RESPECTIVE COUNTY OR STATE AGENCIES, UTILITIES (INCLUDING WITHOUT LIMITATION MAUI ELECTRIC COMPANY, LTD., HAWAIIAN TELCOM, AND OCEANIC TIME WARNER CABLE OF HAWAII), EXAMINING ANY AVAILABLE RECORD DRAWINGS, TONING OF UNDERGROUND UTILITIES, TEST PITS, AND CONFIRMING THE PRESENCE, DEPTH, SIZE, AND TYPE OF ANY EXISTING UTILITIES ALONG AND ACROSS THE PROPOSED IMPROVEMENTS. CONTRACTOR SHALL NOTIFY AND COORDINATE CONSTRUCTION ACTIVITIES, AND ANY REQUIRED RELOCATION, WITH RESPECTIVE AGENCIES AND UTILITIES.
2. CONTRACTOR SHALL PERFORM A THOROUGH FIELD INVESTIGATION AND ANY EXISTING ITEMS OR IMPROVEMENTS TO BE RETAINED (INCLUDING, BUT NOT LIMITED TO, HANDHOLES, MANHOLES, VALVES, VALVE BOXES, FIRE HYDRANTS, LIGHT POLES, METERS, METER BOXES, LANDSCAPE IRRIGATION, ETC.), WHETHER OR NOT SHOWN ON THE PLANS, SHALL BE ADJUSTED TO NEW FINISH GRADE.
3. LOCATIONS OF EXISTING UTILITIES, AS SHOWN ON PLANS AND/OR PROFILES, ARE APPROXIMATE ONLY, WERE DETERMINED ON THE BEST INFORMATION AVAILABLE, AND ARE BASED ON AVAILABLE CONSTRUCTIONS PLANS FOR SAME, ASSUMING STANDARD MINIMUM COVERS, AND/ OR VISIBLE FIELD FEATURES. CONTRACTOR SHALL CONDUCT A THROUGH FIELD INVESTIGATION TO VERIFY ACTUAL LOCATION, DEPTH, SIZE, AND TYPE OF ALL EXISTING UTILITIES, PRIOR TO COMMENCEMENT OF CONSTRUCTION. SHOULD ANY DISCREPANCIES OCCUR, CONTRACTOR SHALL IMMEDIATELY NOTIFY ENGINEER BEFORE PROCEEDING ANY FURTHER WITH THE WORK.
4. OWNERS OF ADJOINING LANDS, SHOWN ON PLAN, ARE TAKEN FROM RECORDS FILED IN THE REAL PROPERTY MAPPING BRANCH, & ARE SUBJECT TO VERIFICATION.
5. SEE SHEET C2.01 FOR LEGEND AND ABBREVIATIONS.
6. SEE SHEETS C2.03 TO C2.05 FOR ADDITIONAL CONSTRUCTION NOTES.
7. CONTRACTOR TO VERIFY CONDITION OF EXISTING AIR RELIEF VALVE ASSEMBLY AND MANHOLE FOR RELOCATION. REPLACE WITH NEW AIR RELIEF VALVE ASSEMBLY AND/OR TYPE "F" MANHOLE, IF NECESSARY. CONFIRM REPLACEMENT WITH INSPECTOR PRIOR TO INSTALLATION AT FINAL LOCATION.

REVISION	DESCRIPTION	DATE

CLIFFORD N. MUKAI
LICENSED PROFESSIONAL ENGINEER
NO. 6667-C
HAWAII, U.S.A.

License Expires: April 30, 2018
SIGNATURE DATE

THIS WORK WAS PREPARED BY ME OR UNDER MY SUPERVISION AND CONSTRUCTION OF THIS PROJECT WILL BE UNDER MY OBSERVATION "AS DEFINED IN SECTION 16-115-2 OF THE HAWAII ADMINISTRATIVE RULES FOR PROFESSIONAL ENGINEERS, ARCHITECTS, LAND SURVEYORS AND LANDSCAPE ARCHITECTS"

WARREN S. UNEMORI ENGINEERING, INC.
CIVIL & STRUCTURAL ENGINEERS/LAND SURVEYORS
WELLS STREET PROFESSIONAL CENTER, SUITE 403
2145 WELLS STREET, WAILUKU, MAUI, HAWAII 96793

SOUTH MAUI COMMUNITY PARK RECREATION CENTER
PROJECT NO.: P12 / 012 TAX MAP KEY: (2) 2-2-02 : 42
Waiohuli - Keokea (Kihei), Makawao, Maui, Hawaii

TITLE PLAN & PROFILE: DRIVEWAY "A"

B.A.W. DESIGNED BY	C.N.M. CHECKED BY	03031.30 JOB NUMBER	C8.02 SHEET
D.P.T. DRAWN BY	C.N.M. APPROVED BY	Nov. 1, 2016 DATE	OF SHEETS
SCALE AS NOTED			

I:\Projects\03proj\03031.30 - South Maui Comm Park - Gymnasium (ADC)\dwg\contrctn\P1-DRIVEWAYS-00.dwg

11-01-2016 (BID SET)

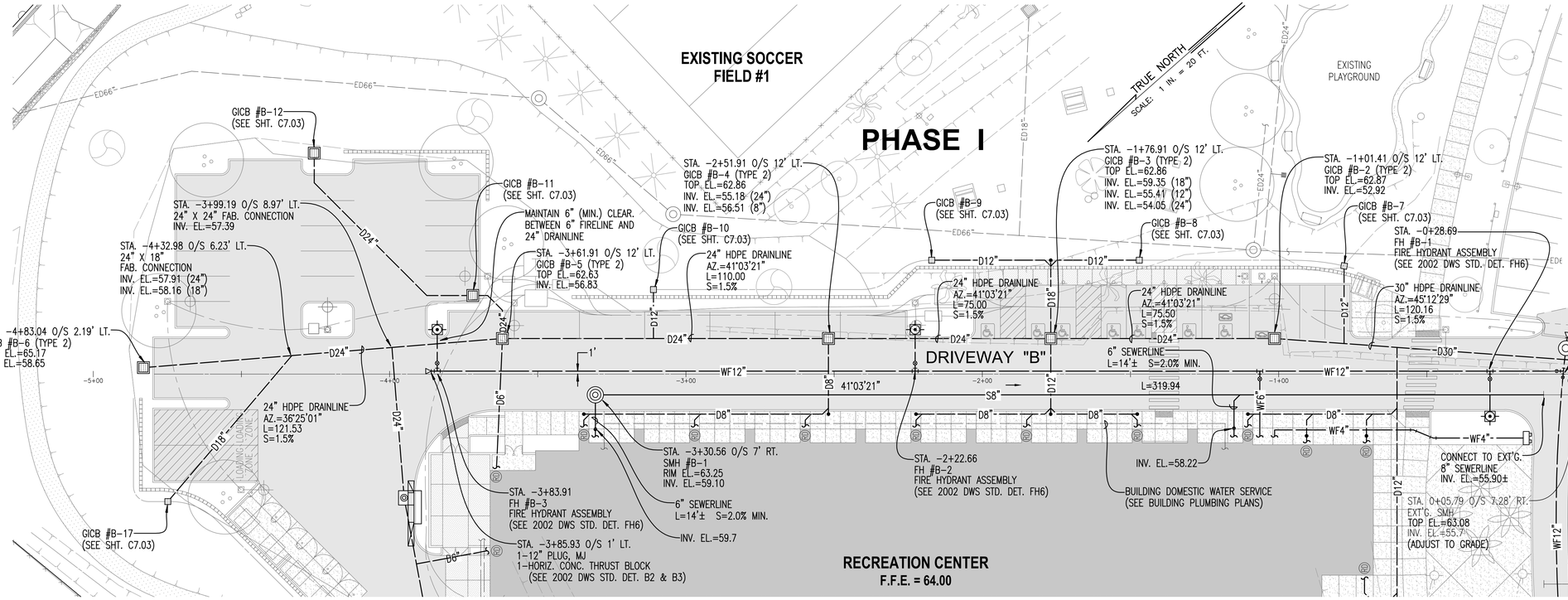

PLAN

SCALE: 1 IN. = 20 FT.

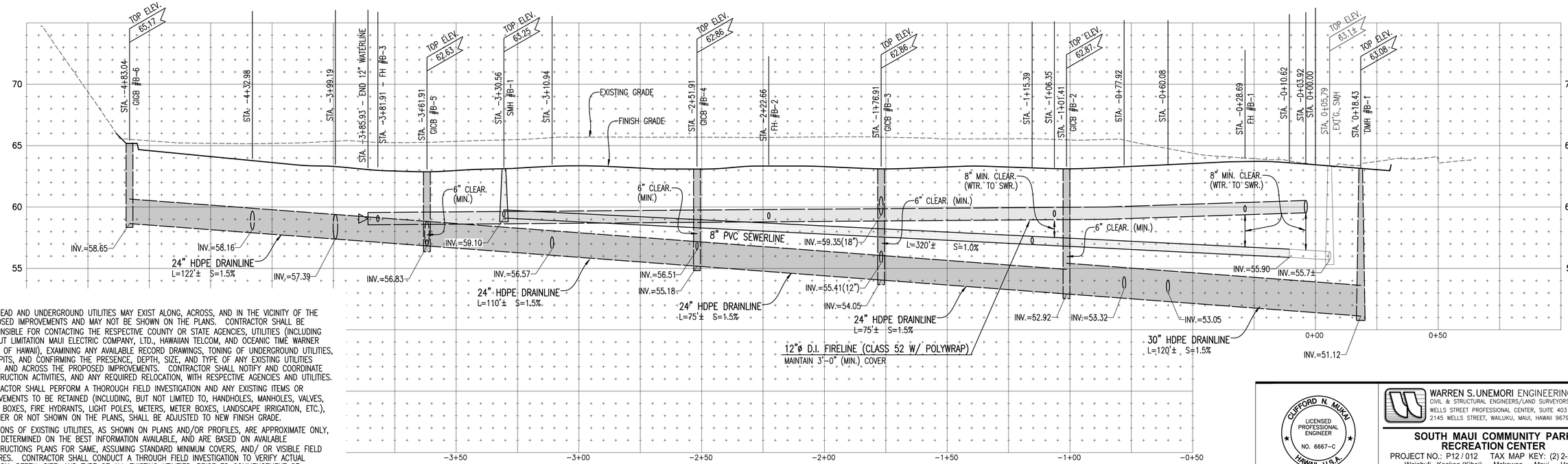

PROFILE – DRIVEWAY "B"

SCALE: HORIZ. 1" = 20'
VERT. 1" = 4'

NOTES:

1. OVERHEAD AND UNDERGROUND UTILITIES MAY EXIST ALONG, ACROSS, AND IN THE VICINITY OF THE PROPOSED IMPROVEMENTS AND MAY NOT BE SHOWN ON THE PLANS. CONTRACTOR SHALL BE RESPONSIBLE FOR CONTACTING THE RESPECTIVE COUNTY OR STATE AGENCIES, UTILITIES (INCLUDING WITHOUT LIMITATION MAUI ELECTRIC COMPANY, LTD., HAWAIIAN TELCOM, AND OCEANIC TIME WARNER CABLE OF HAWAII), EXAMINING ANY AVAILABLE RECORD DRAWINGS, TONING OF UNDERGROUND UTILITIES, TEST PITS, AND CONFIRMING THE PRESENCE, DEPTH, SIZE, AND TYPE OF ANY EXISTING UTILITIES ALONG AND ACROSS THE PROPOSED IMPROVEMENTS. CONTRACTOR SHALL NOTIFY AND COORDINATE CONSTRUCTION ACTIVITIES, AND ANY REQUIRED RELOCATION, WITH RESPECTIVE AGENCIES AND UTILITIES.
2. CONTRACTOR SHALL PERFORM A THOROUGH FIELD INVESTIGATION AND ANY EXISTING ITEMS OR IMPROVEMENTS TO BE RETAINED (INCLUDING, BUT NOT LIMITED TO, HANDHOLES, MANHOLES, VALVES, VALVE BOXES, FIRE HYDRANTS, LIGHT POLES, METERS, METER BOXES, LANDSCAPE IRRIGATION, ETC.), WHETHER OR NOT SHOWN ON THE PLANS, SHALL BE ADJUSTED TO NEW FINISH GRADE.
3. LOCATIONS OF EXISTING UTILITIES, AS SHOWN ON PLANS AND/OR PROFILES, ARE APPROXIMATE ONLY, WERE DETERMINED ON THE BEST INFORMATION AVAILABLE, AND ARE BASED ON AVAILABLE CONSTRUCTIONS PLANS FOR SAME, ASSUMING STANDARD MINIMUM COVERS, AND/ OR VISIBLE FIELD FEATURES. CONTRACTOR SHALL CONDUCT A THROUGH FIELD INVESTIGATION TO VERIFY ACTUAL LOCATION, DEPTH, SIZE, AND TYPE OF ALL EXISTING UTILITIES, PRIOR TO COMMENCEMENT OF CONSTRUCTION. SHOULD ANY DISCREPANCIES OCCUR, CONTRACTOR SHALL IMMEDIATELY NOTIFY ENGINEER BEFORE PROCEEDING ANY FURTHER WITH THE WORK.
4. OWNERS OF ADJOINING LANDS, SHOWN ON PLAN, ARE TAKEN FROM RECORDS FILED IN THE REAL PROPERTY MAPPING BRANCH, & ARE SUBJECT TO VERIFICATION.
5. SEE SHEET C2.01 FOR LEGEND AND ABBREVIATIONS.
6. SEE SHEETS C2.03 TO C2.05 FOR ADDITIONAL CONSTRUCTION NOTES.

REVISION	DESCRIPTION	DATE

CLIFFORD N. MUKAI
LICENSED PROFESSIONAL ENGINEER
NO. 6667-C
HAWAII, U.S.A.

License Expires: April 30, 2018

SIGNATURE DATE

THIS WORK WAS PREPARED BY ME OR UNDER MY SUPERVISION AND CONSTRUCTION OF THIS PROJECT WILL BE UNDER MY OBSERVATION "AS DEFINED IN SECTION 16-115-2 OF THE HAWAII ADMINISTRATIVE RULES FOR PROFESSIONAL ENGINEERS, ARCHITECTS, LAND SURVEYORS AND LANDSCAPE ARCHITECTS"

WARREN S. UNEMORI ENGINEERING, INC.
CIVIL & STRUCTURAL ENGINEERS/LAND SURVEYORS
WELLS STREET PROFESSIONAL CENTER, SUITE 403
2145 WELLS STREET, WAILUKU, MAUI, HAWAII 96793

SOUTH MAUI COMMUNITY PARK RECREATION CENTER

PROJECT NO.: P12 / 012 TAX MAP KEY: (2) 2-2-02 : 42
Waiohuli - Keokea (Kihei), Makawao, Maui, Hawaii

TITLE PLAN & PROFILE: DRIVEWAY "B"

B.A.W. DESIGNED BY	C.N.M. CHECKED BY	03031.30 JOB NUMBER	C8.03 SHEET
D.P.T. DRAWN BY	C.N.M. APPROVED BY		
SCALE AS NOTED		Nov. 1, 2016 DATE	OF SHEETS

\\Projects\03proj\03031.30 - South Maui Comm Park - Gymnasium (ADC)\dwg\contsdwg\P1-DRIVEWAYS-00.dwg

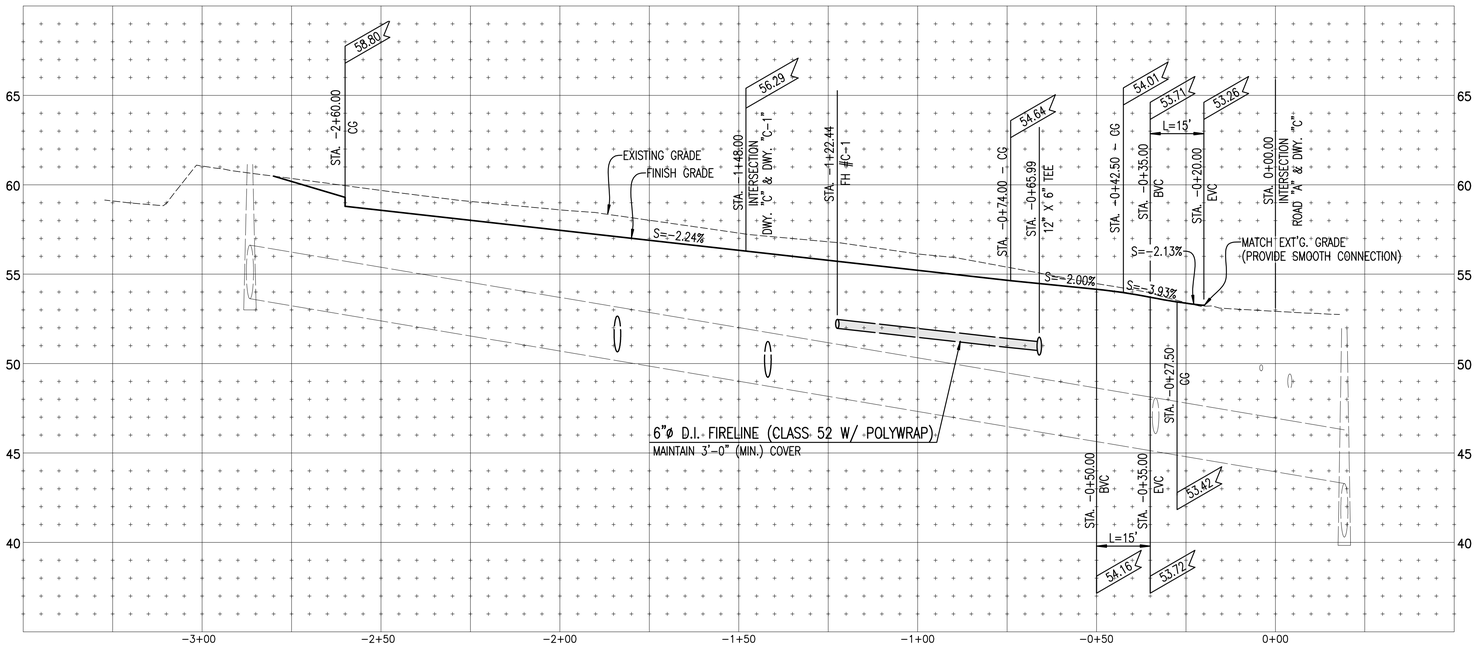

PROFILE – DRIVEWAY "C"

SCALE: HORIZ. 1" = 20'
VERT. 1" = 4'

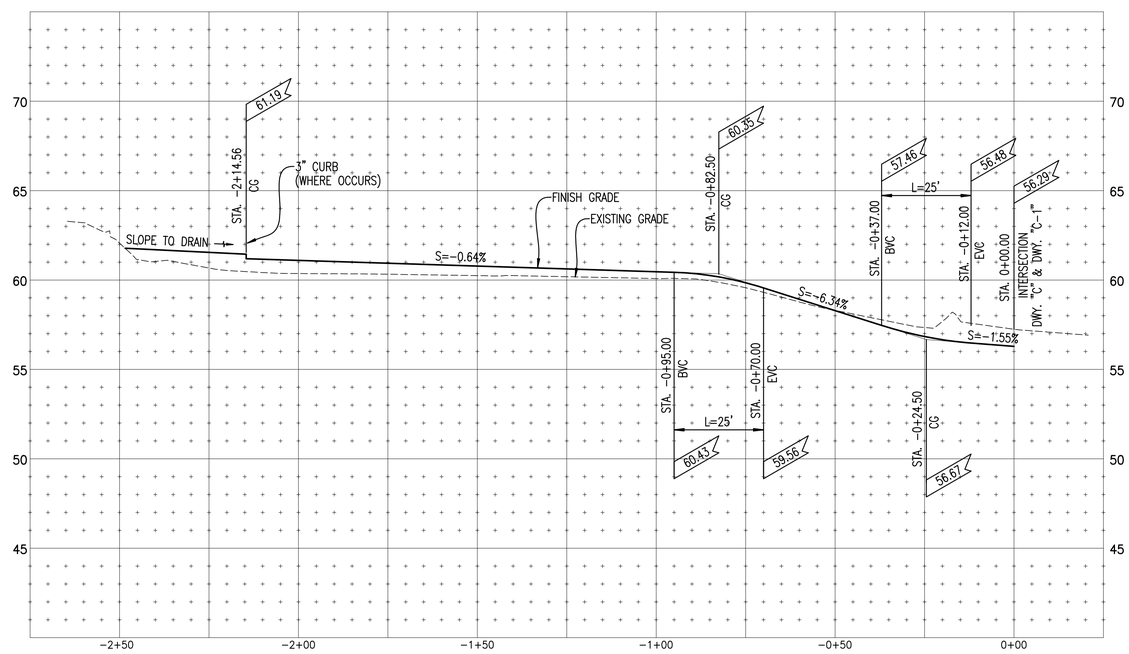

PROFILE – DRIVEWAY "C-1"

SCALE: HORIZ. 1" = 20'
VERT. 1" = 4'

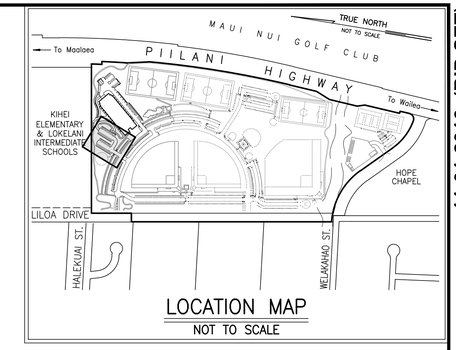

LOCATION MAP
NOT TO SCALE

NOTES:

1. OVERHEAD AND UNDERGROUND UTILITIES MAY EXIST ALONG, ACROSS, AND IN THE VICINITY OF THE PROPOSED IMPROVEMENTS AND MAY NOT BE SHOWN ON THE PLANS. CONTRACTOR SHALL BE RESPONSIBLE FOR CONTACTING THE RESPECTIVE COUNTY OR STATE AGENCIES, UTILITIES (INCLUDING WITHOUT LIMITATION MAUI ELECTRIC COMPANY, LTD., HAWAIIAN TELCOM, AND OCEANIC TIME WARNER CABLE OF HAWAII), EXAMINING ANY AVAILABLE RECORD DRAWINGS, TONING OF UNDERGROUND UTILITIES, TEST PITS, AND CONFIRMING THE PRESENCE, DEPTH, SIZE, AND TYPE OF ANY EXISTING UTILITIES ALONG AND ACROSS THE PROPOSED IMPROVEMENTS. CONTRACTOR SHALL NOTIFY AND COORDINATE CONSTRUCTION ACTIVITIES, AND ANY REQUIRED RELOCATION, WITH RESPECTIVE AGENCIES AND UTILITIES.
2. CONTRACTOR SHALL PERFORM A THOROUGH FIELD INVESTIGATION AND ANY EXISTING ITEMS OR IMPROVEMENTS TO BE RETAINED (INCLUDING, BUT NOT LIMITED TO, HANDHOLES, MANHOLES, VALVES, VALVE BOXES, FIRE HYDRANTS, LIGHT POLES, METERS, METER BOXES, LANDSCAPE IRRIGATION, ETC.), WHETHER OR NOT SHOWN ON THE PLANS, SHALL BE ADJUSTED TO NEW FINISH GRADE.
3. LOCATIONS OF EXISTING UTILITIES, AS SHOWN ON PLANS AND/OR PROFILES, ARE APPROXIMATE ONLY, WERE DETERMINED ON THE BEST INFORMATION AVAILABLE, AND ARE BASED ON AVAILABLE CONSTRUCTIONS PLANS FOR SAME, ASSUMING STANDARD MINIMUM COVERS, AND/ OR VISIBLE FIELD FEATURES. CONTRACTOR SHALL CONDUCT A THROUGH FIELD INVESTIGATION TO VERIFY ACTUAL LOCATION, DEPTH, SIZE, AND TYPE OF ALL EXISTING UTILITIES, PRIOR TO COMMENCEMENT OF CONSTRUCTION. SHOULD ANY DISCREPANCIES OCCUR, CONTRACTOR SHALL IMMEDIATELY NOTIFY ENGINEER BEFORE PROCEEDING ANY FURTHER WITH THE WORK.
4. OWNERS OF ADJOINING LANDS, SHOWN ON PLAN, ARE TAKEN FROM RECORDS FILED IN THE REAL PROPERTY MAPPING BRANCH, & ARE SUBJECT TO VERIFICATION.
5. SEE SHEET C2.01 FOR LEGEND AND ABBREVIATIONS.
6. SEE SHEETS C2.03 TO C2.05 FOR ADDITIONAL CONSTRUCTION NOTES.

REVISION	DESCRIPTION	DATE

CLIFFORD N. MUKAI
LICENSED PROFESSIONAL ENGINEER
NO. 6667-C
HAWAII, U.S.A.

License Expires: April 30, 2018
SIGNATURE DATE

THIS WORK WAS PREPARED BY ME OR UNDER MY SUPERVISION AND CONSTRUCTION OF THIS PROJECT WILL BE UNDER MY OBSERVATION "AS DEFINED IN SECTION 16-115-2 OF THE HAWAII ADMINISTRATIVE RULES FOR PROFESSIONAL ENGINEERS, ARCHITECTS, LAND SURVEYORS AND LANDSCAPE ARCHITECTS"

WARREN S. UNEMORI ENGINEERING, INC.
CIVIL & STRUCTURAL ENGINEERS/LAND SURVEYORS
WELLS STREET PROFESSIONAL CENTER, SUITE 403
2145 WELLS STREET, WAILUKU, MAUI, HAWAII 96793

SOUTH MAUI COMMUNITY PARK RECREATION CENTER

PROJECT NO.: P12 / 012 TAX MAP KEY: (2) 2-2-02 : 42
Waiohuli - Keokea (Kihei), Makawao, Maui, Hawaii

TITLE PROFILE: DRIVEWAYS "C" & "C-1"

B.A.W. DESIGNED BY	C.N.M. CHECKED BY	03031.30 JOB NUMBER	C8.04 SHEET
D.P.T. DRAWN BY	C.N.M. APPROVED BY	Nov. 1, 2016 DATE	OF SHEETS
SCALE AS NOTED			

11-01-2016 (BID SET)

I:\Projects\03proj\03031.30 - South Maui Comm Park - Gymnasium (ADC)\dwg\constrns\P1-DRIVEWAYS-00.dwg

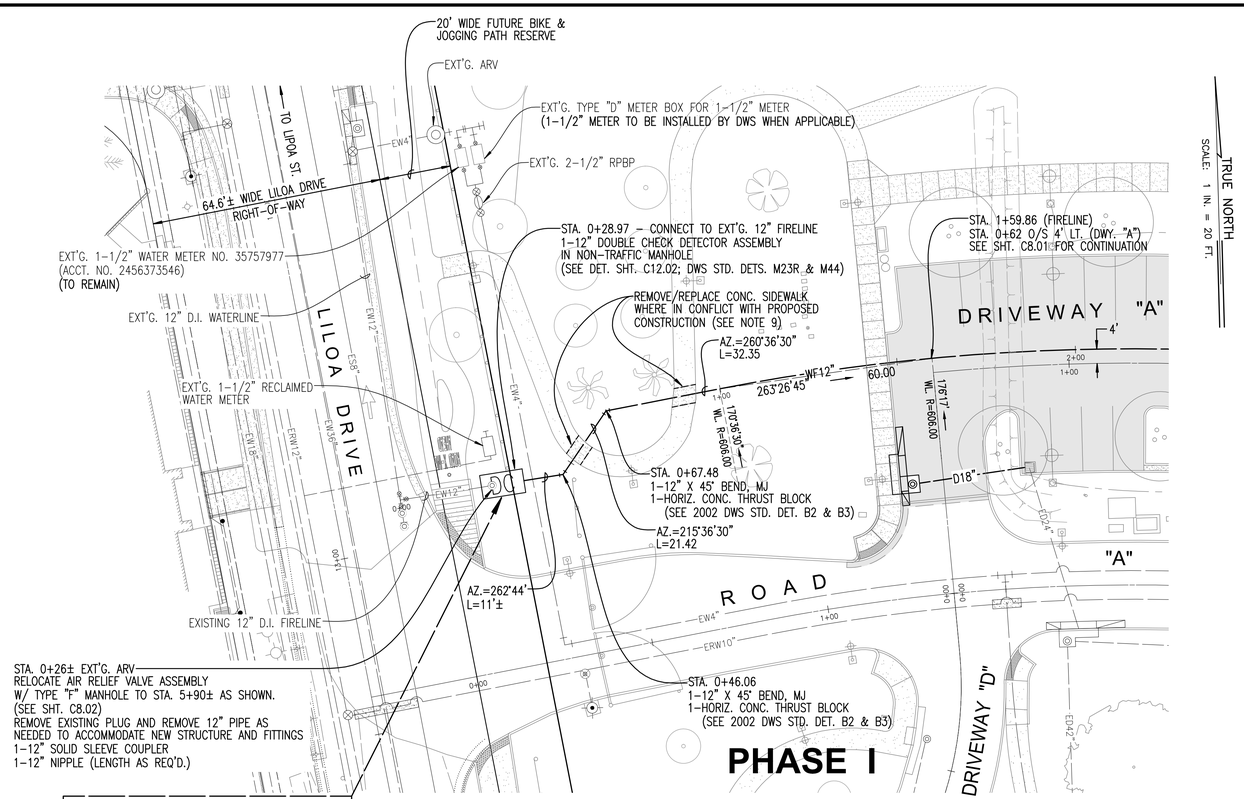

PLAN

SCALE: 1 IN. = 20 FT.

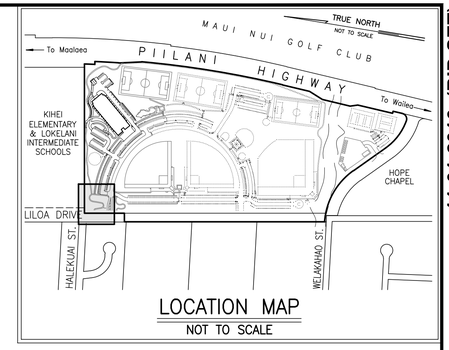

LOCATION MAP

NOT TO SCALE

BACKFLOW PREVENTION DATA

TAX MAP KEY: (2) 2-2-02 : 42
PROJECT NAME: SOUTH MAUI COMMUNITY PARK
SERVICE ADDRESS: 0 LILOA DRIVE
TYPE OF DEVICE: DOUBLE CHECK DETECTOR ASSEMBLY
SIZE/MAKE/MODEL: 12"/WATTS/774DCDA

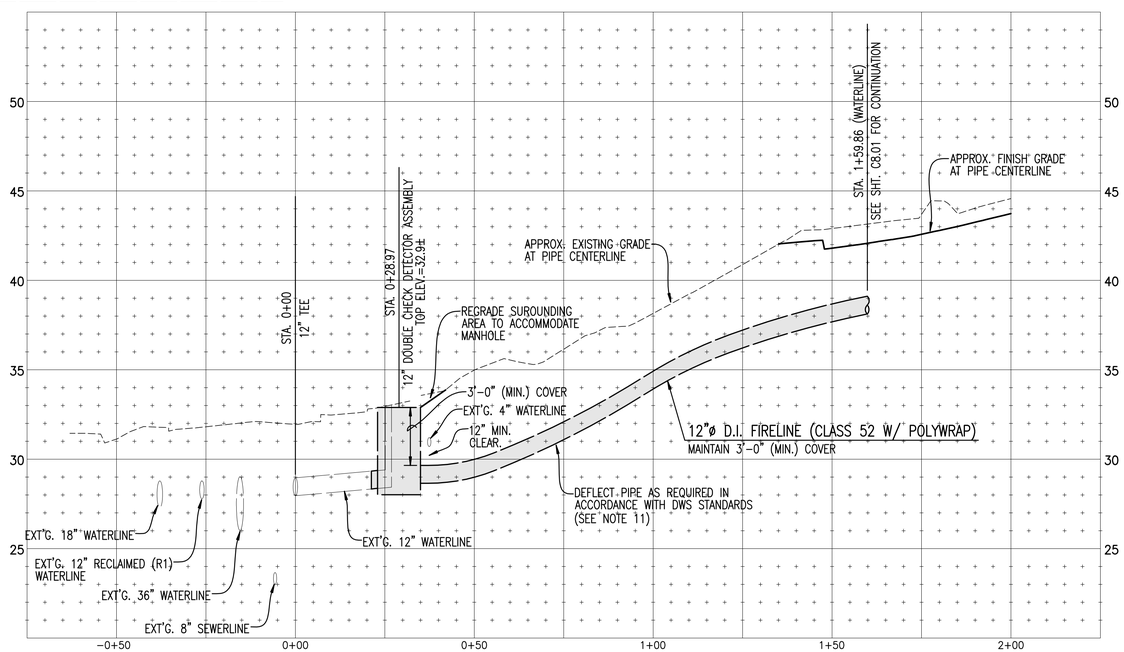

PROFILE – 12" WATERLINE

SCALE: HORIZ. 1" = 20'
VERT. 1" = 4'

NOTES:

1. OVERHEAD AND UNDERGROUND UTILITIES MAY EXIST ALONG, ACROSS, AND IN THE VICINITY OF THE PROPOSED IMPROVEMENTS AND MAY NOT BE SHOWN ON THE PLANS. CONTRACTOR SHALL BE RESPONSIBLE FOR CONTACTING THE RESPECTIVE COUNTY OR STATE AGENCIES, UTILITIES (INCLUDING WITHOUT LIMITATION MAUI ELECTRIC COMPANY, LTD., HAWAIIAN TELCOM, AND OCEANIC TIME WARNER CABLE OF HAWAII), EXAMINING ANY AVAILABLE RECORD DRAWINGS, TONING OF UNDERGROUND UTILITIES, TEST PITS, AND CONFIRMING THE PRESENCE, DEPTH, SIZE, AND TYPE OF ANY EXISTING UTILITIES ALONG AND ACROSS THE PROPOSED IMPROVEMENTS. CONTRACTOR SHALL NOTIFY AND COORDINATE CONSTRUCTION ACTIVITIES, AND ANY REQUIRED RELOCATION, WITH RESPECTIVE AGENCIES AND UTILITIES.
2. CONTRACTOR SHALL PERFORM A THOROUGH FIELD INVESTIGATION AND ANY EXISTING ITEMS OR IMPROVEMENTS TO BE RETAINED (INCLUDING, BUT NOT LIMITED TO, HANDHOLES, MANHOLES, VALVES, VALVE BOXES, FIRE HYDRANTS, LIGHT POLES, METERS, METER BOXES, LANDSCAPE IRRIGATION, ETC.), WHETHER OR NOT SHOWN ON THE PLANS, SHALL BE ADJUSTED TO NEW FINISH GRADE.
3. LOCATIONS OF EXISTING UTILITIES, AS SHOWN ON PLANS AND/OR PROFILES, ARE APPROXIMATE ONLY, WERE DETERMINED ON THE BEST INFORMATION AVAILABLE, AND ARE BASED ON AVAILABLE CONSTRUCTIONS PLANS FOR SAME, ASSUMING STANDARD MINIMUM COVERS, AND/ OR VISIBLE FIELD FEATURES. CONTRACTOR SHALL CONDUCT A THROUGH FIELD INVESTIGATION TO VERIFY ACTUAL LOCATION, DEPTH, SIZE, AND TYPE OF ALL EXISTING UTILITIES, PRIOR TO COMMENCEMENT OF CONSTRUCTION. SHOULD ANY DISCREPANCIES OCCUR, CONTRACTOR SHALL IMMEDIATELY NOTIFY ENGINEER BEFORE PROCEEDING ANY FURTHER WITH THE WORK.
4. OWNERS OF ADJOINING LANDS, SHOWN ON PLAN, ARE TAKEN FROM RECORDS FILED IN THE REAL PROPERTY MAPPING BRANCH, & ARE SUBJECT TO VERIFICATION.
5. SEE SHEET C2.01 FOR LEGEND AND ABBREVIATIONS.
6. SEE SHEETS C2.03 TO C2.05 FOR ADDITIONAL CONSTRUCTION NOTES.
7. EXISTING INVERTS AS SHOWN ON THE PLANS ARE FROM AVAILABLE AS-BUILTS AND CONTRACTOR SHALL VERIFY IN THE FIELD.
8. CONTRACTOR SHALL SAWCUT CONCRETE TO BE REMOVED AND REPLACED AT NEAREST JOINT. REPLACE IN KIND.
9. ANY LANDSCAPE OR IRRIGATION DISTURBED BY CONSTRUCTION SHALL BE REPAIRED, REPLACED AND RESTORED TO ITS ORIGINAL CONDITION OR BETTER TO THE SATISFACTION OF DP&R.
10. SEE MAX. HORIZONTAL & VERTICAL DUCTILE IRON PIPE DEFLECTION (SHEET C12.01)

REVISION	DESCRIPTION	DATE

CLIFFORD N. MUKAI
LICENSED PROFESSIONAL ENGINEER
NO. 6667-C
HAWAII, U.S.A.

SIGNATURE — DATE — License Expires: April 30, 2018

THIS WORK WAS PREPARED BY ME OR UNDER MY SUPERVISION AND CONSTRUCTION OF THIS PROJECT WILL BE UNDER MY OBSERVATION "AS DEFINED IN SECTION 16-115-2 OF THE HAWAII ADMINISTRATIVE RULES FOR PROFESSIONAL ENGINEERS, ARCHITECTS, LAND SURVEYORS AND LANDSCAPE ARCHITECTS"

WARREN S. UNEMORI ENGINEERING, INC.
CIVIL & STRUCTURAL ENGINEERS/LAND SURVEYORS
WELLS STREET PROFESSIONAL CENTER, SUITE 403
2145 WELLS STREET, WAILUKU, MAUI, HAWAII 96793

SOUTH MAUI COMMUNITY PARK RECREATION CENTER

PROJECT NO.: P12 / 012 TAX MAP KEY: (2) 2-2-02 : 42
Waiohuli - Keokea (Kihei), Makawao, Maui, Hawaii

TITLE PLAN & PROFILE: WATERLINE EXTENSION

B.A.W. DESIGNED BY	C.N.M. CHECKED BY	03031.30 JOB NUMBER	C8.05 SHEET
D.P.T. DRAWN BY	C.N.M. APPROVED BY	Nov. 1, 2016 DATE	OF SHEETS
AS NOTED SCALE			

11-01-2016 (BID SET)

\\A\Projects\03proj\03031.30 - South Maui Comm Park - Gymnasium (ADC)\dwg\compliance\P1 - DRIVEWAYS-00.dwg

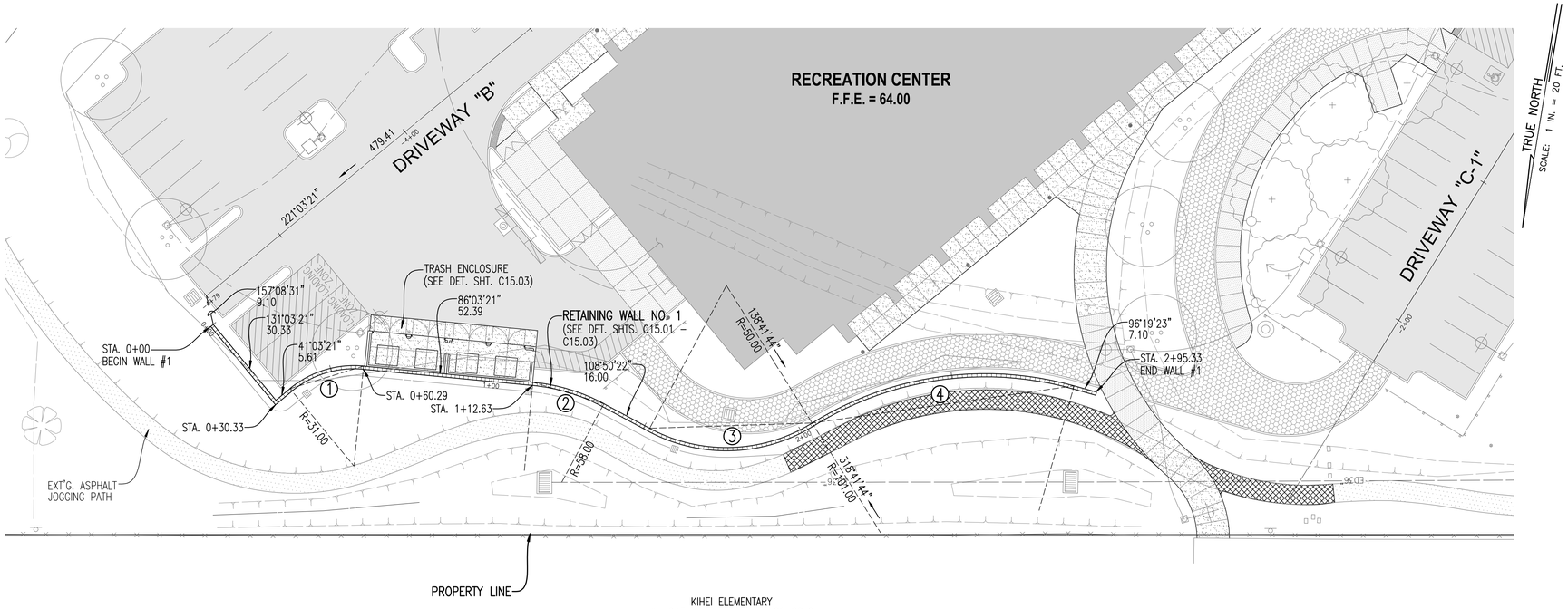

KIHEI ELEMENTARY
& LOKELANI INTERMEDIATE SCHOOLS
STATE OF HAWAII
(OWNER)

PLAN

SCALE: 1 IN. = 20 FT.

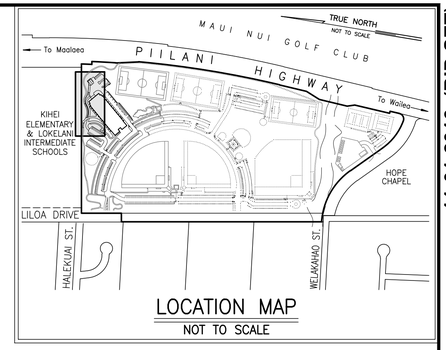

LOCATION MAP

NOT TO SCALE

① ℄ CURVE DATA
△=45°00'00"
R=31.00
L=24.35
T=12.84
C=23.73
Ch.Az.=63°33'21"

② ℄ CURVE DATA
△=22°47'01"
R=58.00
L=23.06
T=11.69
C=22.91
Ch.Az.=97°26'51"

③ ℄ CURVE DATA
△=60°08'39"
R=50.00
L=52.49
T=28.95
C=50.11
Ch.Az.=78°46'03"

④ ℄ CURVE DATA
△=47°37'40"
R=101.00
L=83.96
T=44.58
C=81.56
Ch.Az.=72°30'33"

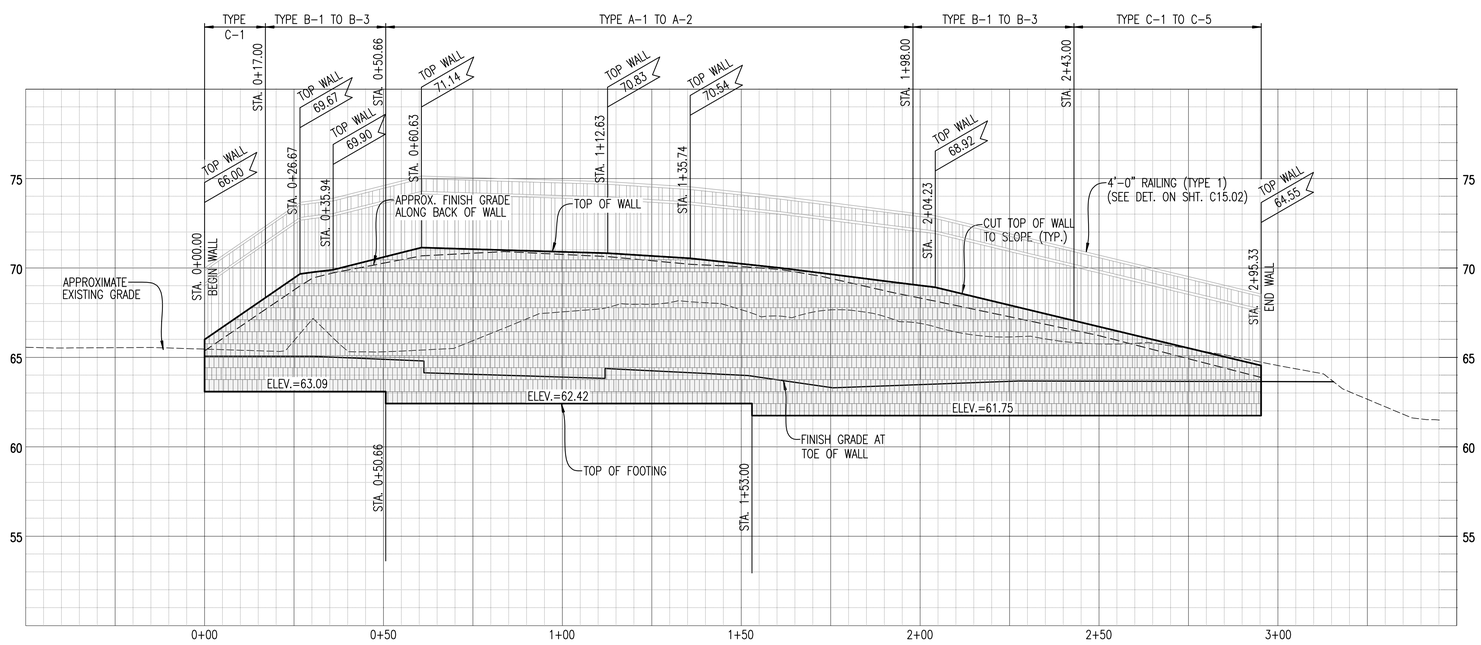

PROFILE – RETAINING WALL NO. 1

Scale: Horiz. 1" = 20'
Vert. 1" = 4'

NOTES:

1. ANY EXISTING GRADES & EXISTING GRADE CONTOURS WITHIN ADJOINING PROPERTIES ARE APPROXIMATE ONLY & ARE BASED ON CONSTRUCTION PLANS. ACTUAL EXISTING GRADES MAY VARY, IN THE FIELD, FROM WHAT IS SHOWN.
2. CONTRACTOR SHALL VERIFY THE EXISTING GRADES BEFORE PROCEEDING WITH GRADING WORK.
3. SHOULD ANY DISCREPANCIES BE DISCOVERED IN THE EXISTING GRADES OR DIMENSIONS GIVEN ON THE PLANS. THE CONTRACTOR SHALL IMMEDIATELY NOTIFY THE ENGINEER BEFORE PROCEEDING FURTHER WITH ANY WORK, OTHERWISE HE WILL BE RESPONSIBLE FOR ANY COST INVOLVED IN CORRECTION OF CONSTRUCTION PLACED DUE TO SUCH DISCREPANCIES.

REVISION	DESCRIPTION	DATE

CLIFFORD N. MUKAI
LICENSED PROFESSIONAL ENGINEER
NO. 6667-C
HAWAII, U.S.A.

License Expires: April 30, 2018

SIGNATURE DATE

THIS WORK WAS PREPARED BY ME OR UNDER MY SUPERVISION AND CONSTRUCTION OF THIS PROJECT WILL BE UNDER MY OBSERVATION "AS DEFINED IN SECTION 16-115-2 OF THE HAWAII ADMINISTRATIVE RULES FOR PROFESSIONAL ENGINEERS, ARCHITECTS, LAND SURVEYORS AND LANDSCAPE ARCHITECTS"

WARREN S. UNEMORI ENGINEERING, INC.
CIVIL & STRUCTURAL ENGINEERS/LAND SURVEYORS
WELLS STREET PROFESSIONAL CENTER, SUITE 403
2145 WELLS STREET, WAILUKU, MAUI, HAWAII 96793

SOUTH MAUI COMMUNITY PARK RECREATION CENTER

PROJECT NO.: P12 / 012 TAX MAP KEY: (2) 2-2-02 : 42
Waiohuli - Keokea (Kihei), Makawao, Maui, Hawaii

TITLE PLAN & PROFILE: RETAINING WALL NO. 1

B.A.W. DESIGNED BY	C.N.M. CHECKED BY	03031.30 JOB NUMBER	C9.01 SHEET
D.P.T. DRAWN BY	A.L.U. APPROVED BY	Nov. 1, 2016 DATE	OF SHEETS
SCALE AS NOTED			

11-01-2016 (BID SET)

I:\Projects\03proj\03031.30 - South Maui Comm Park - Gymnasium (ADC)\dwg\constions\P1-WALL-02.dwg

11-01-2016 (BID SET)

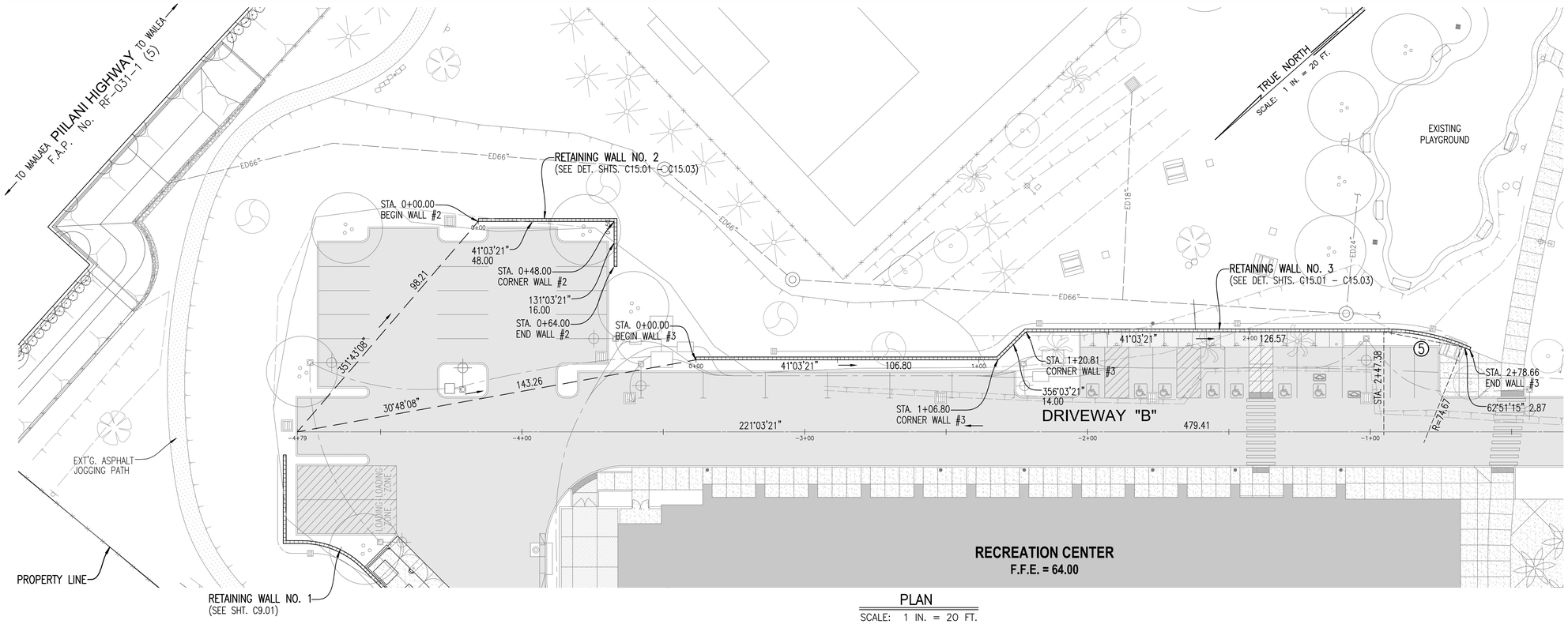

PLAN

SCALE: 1 IN. = 20 FT.

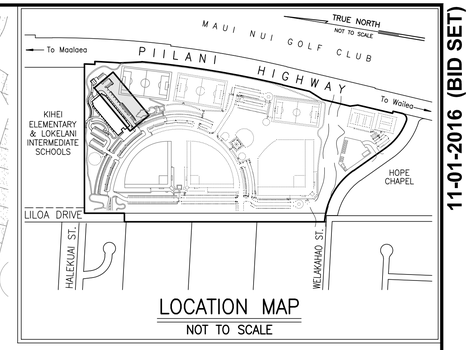

LOCATION MAP

NOT TO SCALE

⑤ ℄ CURVE DATA

△=21°47'54"
R=74.67
L=28.41
T=14.38
C=28.24
Ch.Az.=51°57'18"

NOTES:

1. ANY EXISTING GRADES & EXISTING GRADE CONTOURS WITHIN ADJOINING PROPERTIES ARE APPROXIMATE ONLY & ARE BASED ON CONSTRUCTION PLANS. ACTUAL EXISTING GRADES MAY VARY, IN THE FIELD, FROM WHAT IS SHOWN.
2. CONTRACTOR SHALL VERIFY THE EXISTING GRADES BEFORE PROCEEDING WITH GRADING WORK.
3. SHOULD ANY DISCREPANCIES BE DISCOVERED IN THE EXISTING GRADES OR DIMENSIONS GIVEN ON THE PLANS. THE CONTRACTOR SHALL IMMEDIATELY NOTIFY THE ENGINEER BEFORE PROCEEDING FURTHER WITH ANY WORK, OTHERWISE HE WILL BE RESPONSIBLE FOR ANY COST INVOLVED IN CORRECTION OF CONSTRUCTION PLACED DUE TO SUCH DISCREPANCIES.

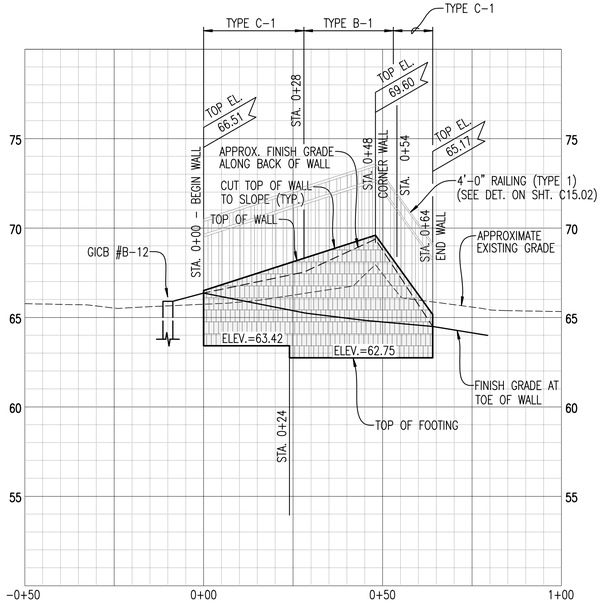

PROFILE – RETAINING WALL NO. 2

Scale: Horiz. 1" = 20'
Vert. 1" = 4'

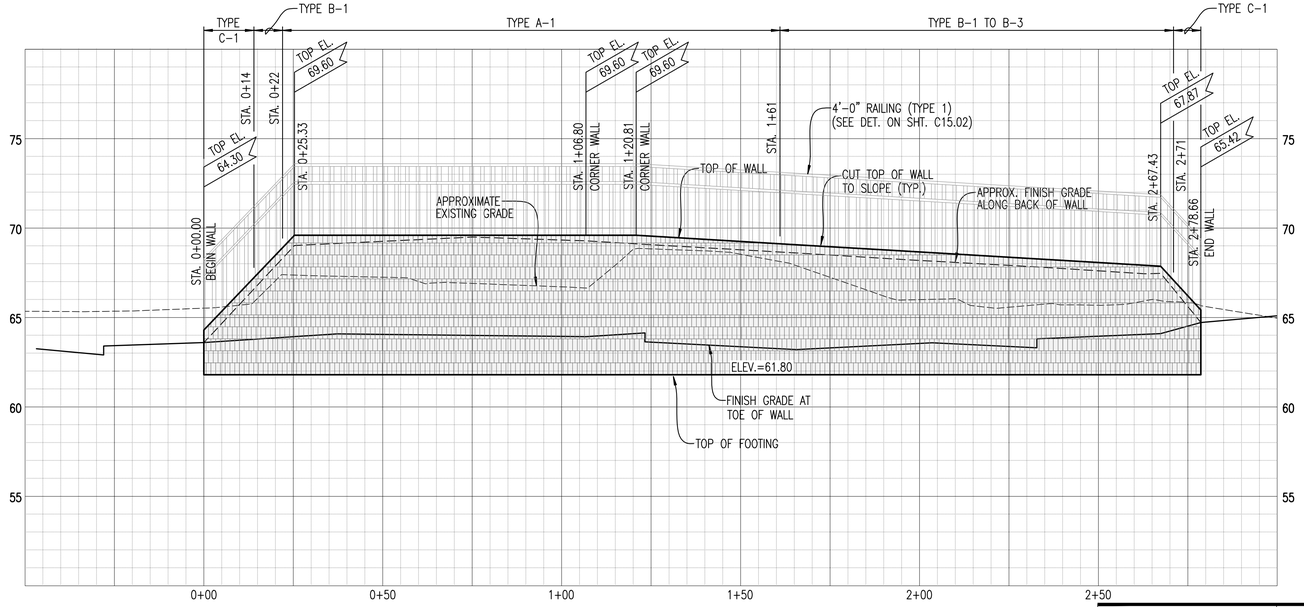

PROFILE – RETAINING WALL NO. 3

Scale: Horiz. 1" = 20'
Vert. 1" = 4'

REVISION	DESCRIPTION	DATE

CLIFFORD N. MUKAI
LICENSED PROFESSIONAL ENGINEER
NO. 6667-C
HAWAII, U.S.A.

License Expires: April 30, 2018

SIGNATURE DATE

THIS WORK WAS PREPARED BY ME OR UNDER MY SUPERVISION AND CONSTRUCTION OF THIS PROJECT WILL BE UNDER MY OBSERVATION "AS DEFINED IN SECTION 16-115-2 OF THE HAWAII ADMINISTRATIVE RULES FOR PROFESSIONAL ENGINEERS, ARCHITECTS, LAND SURVEYORS AND LANDSCAPE ARCHITECTS"

WARREN S. UNEMORI ENGINEERING, INC.
CIVIL & STRUCTURAL ENGINEERS/LAND SURVEYORS
WELLS STREET PROFESSIONAL CENTER, SUITE 403
2145 WELLS STREET, WAILUKU, MAUI, HAWAII 96793

SOUTH MAUI COMMUNITY PARK RECREATION CENTER

PROJECT NO.: P12 / 012 TAX MAP KEY: (2) 2-2-02 : 42
Waiohuli - Keokea (Kihei), Makawao, Maui, Hawaii

TITLE PLAN & PROFILE: RETAINING WALL NOS. 2 & 3

B.A.W. DESIGNED BY	C.N.M. CHECKED BY	03031.30 JOB NUMBER	C9.02 SHEET
D.P.T. DRAWN BY	A.L.U. APPROVED BY	Nov. 1, 2016 DATE	OF SHEETS
SCALE AS NOTED			

V:\Projects\03proj\03031.30 - South Maui Comm Park - Gymnasium (ADC)\dwg\conplans\PL-WALL-00.dwg

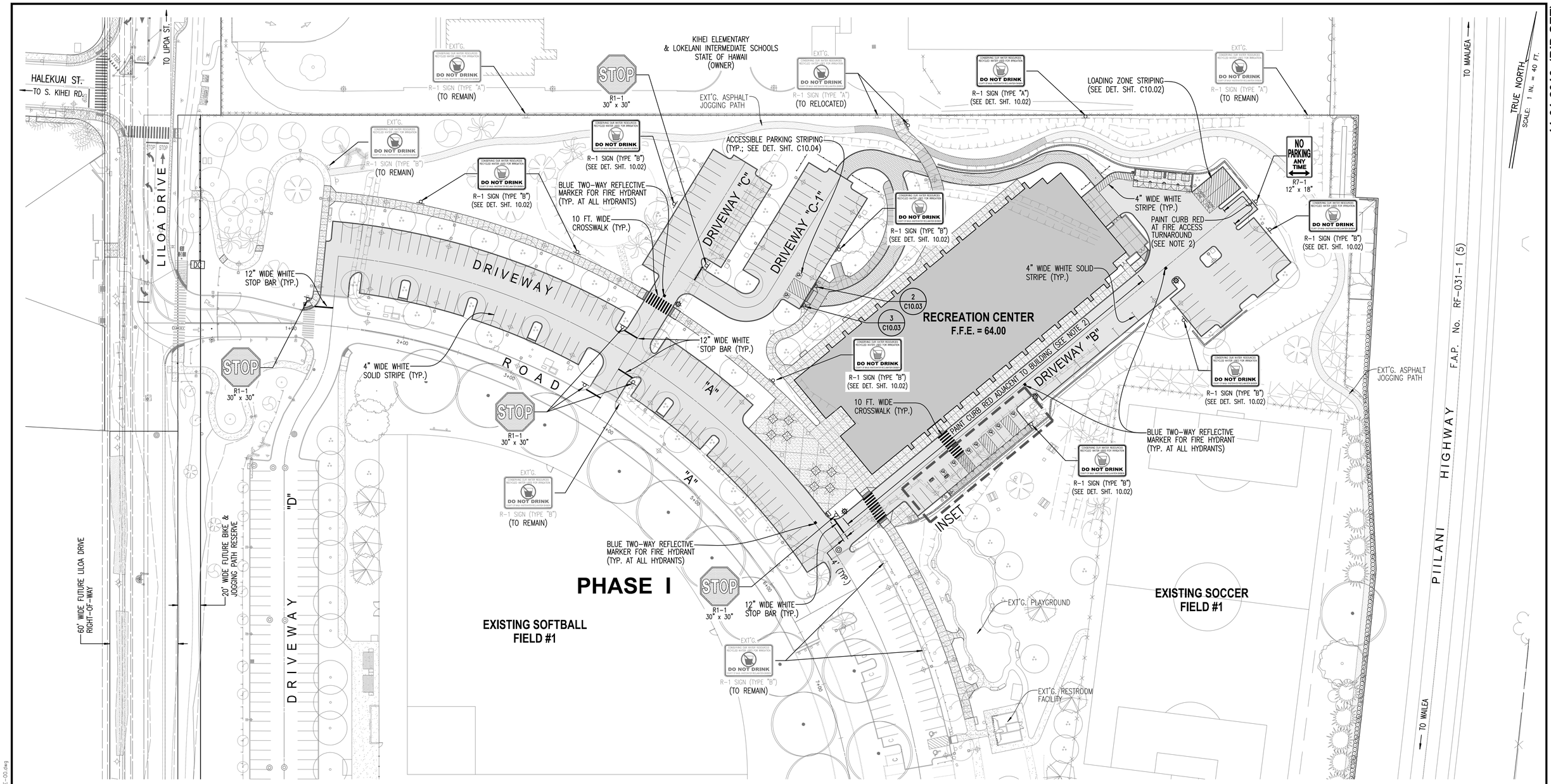

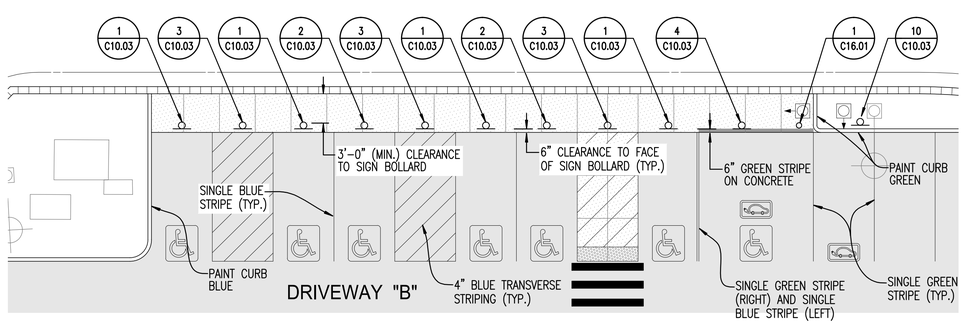

INSET

SCALE: 1 IN. = 10 FT.

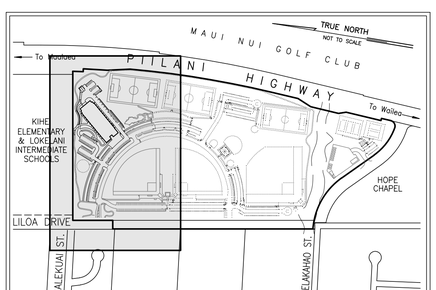

LOCATION MAP

NOT TO SCALE

NOTES:

1. SEE SHTS. C10.02 – C10.04 FOR SIGNING & STRIPING DETAILS.
2. SEE SIGNING & STRIPING NOTES ON SHT. C10.02.

REVISION	DESCRIPTION	DATE

CLIFFORD N. MUKAI
LICENSED PROFESSIONAL ENGINEER
NO. 6667-C
HAWAII, U.S.A.

SIGNATURE — DATE — License Expires: April 30, 2018

THIS WORK WAS PREPARED BY ME OR UNDER MY SUPERVISION AND CONSTRUCTION OF THIS PROJECT WILL BE UNDER MY OBSERVATION "AS DEFINED IN SECTION 16-115-2 OF THE HAWAII ADMINISTRATIVE RULES FOR PROFESSIONAL ENGINEERS, ARCHITECTS, LAND SURVEYORS AND LANDSCAPE ARCHITECTS"

WARREN S. UNEMORI ENGINEERING, INC.
CIVIL & STRUCTURAL ENGINEERS/LAND SURVEYORS
WELLS STREET PROFESSIONAL CENTER, SUITE 403
2145 WELLS STREET, WAILUKU, MAUI, HAWAII 96793

SOUTH MAUI COMMUNITY PARK
RECREATION CENTER

PROJECT NO.: P12 / 012 TAX MAP KEY: (2) 2-2-02 : 42
Waiohuli - Keokea (Kihei), Makawao, Maui, Hawaii

TITLE SIGNING AND STRIPING PLAN

B.A.W. DESIGNED BY	C.N.M. CHECKED BY	03031.30 JOB NUMBER	C10.01 SHEET
D.P.T. DRAWN BY	C.N.M. APPROVED BY		OF SHEETS
AS NOTED SCALE		Nov. 1, 2016 DATE	

11-01-2016 (BID SET)

I:\Projects\03proj\03031.30 - South Maui Comm Park - Gymnasium (ADC)\dwg\conplans\STRIPE-00.dwg

NOTES:

1. ALL SIGNS SHALL:
   - BE ANODIZED ALUMINUM PLATE (0.080" THICK, MIN.);
   - HAVE A REFLECTORIZED, WHITE BACKGROUND; AND,
   - HAVE AN ANTI-GRAFFITI FILM.
2. SIGNS SHALL BE MOUNTED TO POSTS WITH THEFT-RESISTANT FASTENERS. ALL FASTENERS (INCLUDING WASHERS) SHALL BE STAINLESS STEEL.
3. AFTER THE COUNTY AND THE STATE DEPARTMENT OF HEALTH HAVE APPROVED THE HEIGHT AND LOCATION OF THE SIGNS, THE CONTRACTOR SHALL CUT THE END OF THE BOLTS SO THEY ARE FLUSH WITH THE FASTENERS.
4. POSTS SHALL BE ZINC-COATED, METAL:
   - FLANGED CHANNEL POSTS (1.12 POUNDS PER FOOT MIN.); OR,
   - 1 1/2 INCH SQUARE TUBE POSTS (14 GAUGE MIN.).
5. POSTS SHALL BE ANCHORED IN CONCRETE (CLASS "A" OR BETTER).

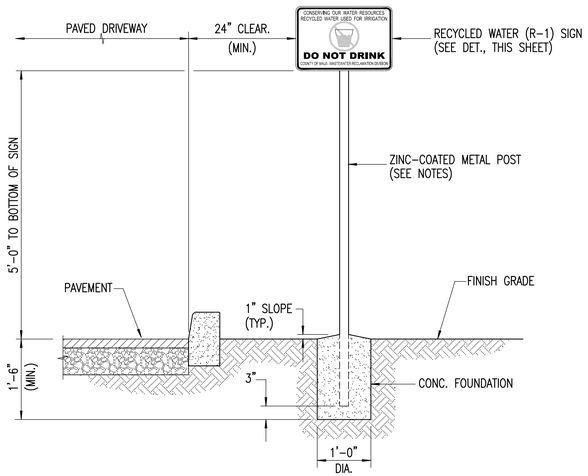

SIGN SCHEDULE	
TYPE	DIMENSIONS
"A"	18" WIDE X 12" HIGH
"B"	12" WIDE X 9" HIGH

DETAIL – RECYCLED WATER (R-1) WARNING SIGN

NOT TO SCALE

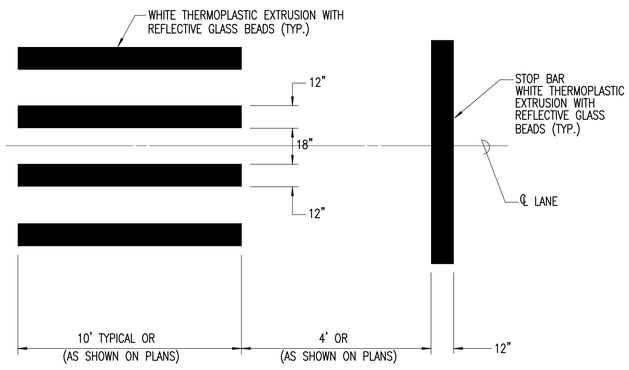

CROSSWALK STRIPING DETAIL

NOT TO SCALE

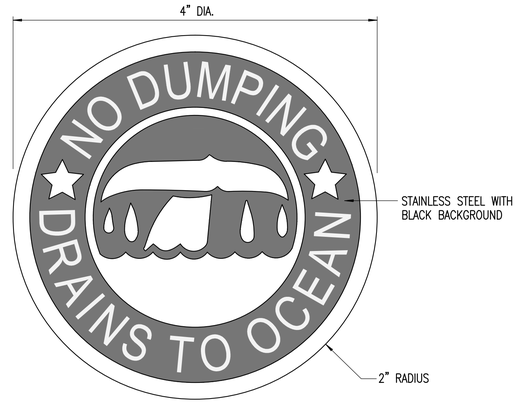

NOTES:

1. STORM DRAIN MARKERS SHALL BE 4" STAINLESS STEEL WITH "WHALE TAIL" (ITEM NO. STDM-14831-SSP BY ALMETEK INDUSTRIES INC., OR APPROVED EQUAL).
2. CONTRACTOR SHALL INSTALL STORM DRAIN MARKER ON ALL CATCH BASINS:
   - A. GRATED INLET CATCH BASIN (GICB) – MARKERS SHALL BE MOUNTED ON THE STEEL GRATE USING GRATE FASTENER OPTION INCLUDING 4" STAINLESS CARRIAGE BOLT WITH STAINLESS STEEL BACKING PLATE AND NUT.
   - B. CURB INLET CATCH BASIN (CB) – MARKER TO BE A SUBSURFACE INSTALLATION PER MANUFACTURERS GUIDELINES.
     - I. WET CONCRETE INSTALLATION USING STAINLESS STEEL THRU-BOLT WITH WASHERS; OR,
     - II. DRY CONCRETE INSTALLATION – RIVET SUBSURFACE MOUNT WITH TUBE ADHESIVE (SIKAFLEX).
   - C. ALL INSTALLATIONS SHALL BE "THEFT PROOF – WARRANTED INSTALLATION", AS DESCRIBED BY MANUFACTURER.
3. STORM DRAIN MARKERS SHALL BE INSTALLED PER MANUFACTURER'S SPECIFICATIONS AND GUIDELINES.
4. CONTRACTOR WILL BE RESPONSIBLE FOR CASTING FEE FROM MANUFACTURER FOR STORM DRAIN MARKER AND SHALL PROVIDE CASTING INFORMATION TO DP&R.

DETAIL – STORM DRAIN MARKER FOR TOP OF ALL CATCH BASINS

NOT TO SCALE

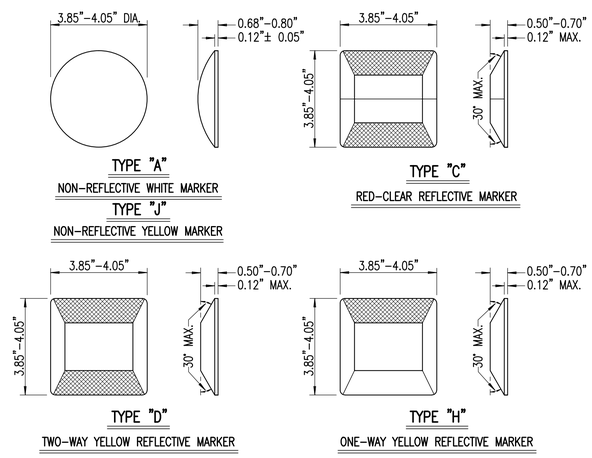

RAISED PAVEMENT MARKER DETAILS

NOT TO SCALE

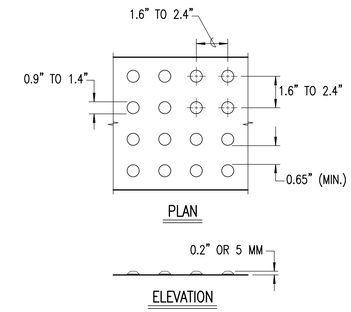

DETAIL – DOME SPACING

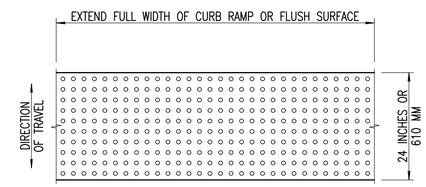

PLAN – DOME ALIGNMENT

NOTES:

1. **SIZE:** DETECTABLE WARNINGS SHALL EXTEND 24 INCHES (610 MM) IN THE DIRECTION OF TRAVEL AND EXTEND THE FULL WIDTH OF THE RAMP RUN.
2. **LOCATION:** THE DETECTABLE WARNING SHALL BE LOCATED SO THAT THE EDGE NEAREST THE CURB LINE OR OTHER POTENTIAL HAZARD IS 6 TO 8 INCHES (150 TO 205 MM) FROM CURB LINE OR OTHER POTENTIAL HAZARD.
3. **DOME SIZE:** TRUNCATED DOMES SHALL HAVE A BASE DIAMETER OF 0.9 INCH (23 MM) MINIMUM AND 1.4 INCH (36 MM) MAXIMUM, A TOP DIAMETER OF 50% OF THE BASE DIAMETER MINIMUM AND 65% OF THE BASE DIAMETER MAXIMUM, AND A HEIGHT OF 0.2 INCH (5 MM).
4. **DOME SPACING:** TRUNCATED DOMES SHALL HAVE A CENTER-TO-CENTER SPACING OF 1.6 INCH (41 MM) MINIMUM AND 2.4 INCH (61 MM) MAXIMUM, AND A BASE-TO-BASE SPACING OF 0.65 INCH (17 MM) MINIMUM, MEASURED BETWEEN THE MOST ADJACENT DOMES.
5. **DOME ALIGNMENT:** DOMES SHALL BE ALIGNED ON A SQUARE GRID IN THE PREDOMINANT DIRECTION OF TRAVEL TO PERMIT WHEELS TO ROLL BETWEEN DOMES.
6. **VISUAL CONTRAST:** THERE SHALL BE A MINIMUM OF 70 PERCENT CONTRAST IN LIGHT REFLECTANCE BETWEEN THE DETECTABLE WARNING AND AN ADJOINING SURFACE, OR THE DETECTABLE WARNING SHALL BE "SAFETY YELLOW". THE MATERIAL USED TO PROVIDE VISUAL CONTRAST SHALL BE AN INTEGRAL PART OF THE DETECTABLE WARNING SURFACE.
7. **MATERIAL:** TRUNCATED DOME DETECTABLE WARNING SYSTEM SHALL CONSIST OF TRUNCATED DOME MATS, ACCESS TILE TACTILE SYSTEMS TYPE MANUFACTURED BY ACCESS PRODUCTS, INC. OR APPROVED EQUAL) COLOR: SAFETY YELLOW (#33528 FEDERAL STANDARD 595B). SHOP DRAWINGS AND SAMPLE (8" X 8" MIN.) SHALL BE SUBMITTED FOR REVIEW AND APPROVAL. INSTALLATION SHALL BE IN ACCORDANCE WITH MANUFACTURERS GUIDELINES AND INSTRUCTIONS.
8. **SUBSTRATE** FOR INSTALLATION IN EXT'G A.C. PAVEMENT SHOULDERS, CONTRACTOR SHALL CONSTRUCTION A 6" (MIN.) THICK REINFORCED CONCRETE SLAB BELOW THE DETECTABLE WARNING MAT (REINFORCED WITH #4 @ 12" O.C. EACHWAY).

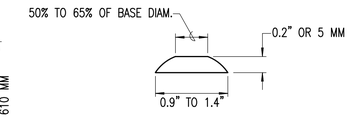

SECTION – TYPICAL DOME

DETAIL – DETECTABLE WARNING ON CURB RAMPS

NOT TO SCALE

details/roads/ramp-warning.dwg

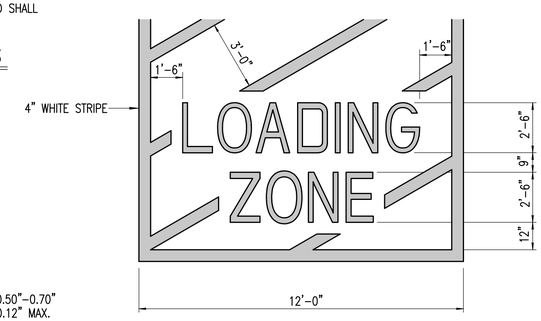

TYPE "A" – STACKED

DETAIL – "LOADING ZONE" LETTERING

NOT TO SCALE

SIGNING & STRIPING NOTES:

1. ALL SIGNS AND PAVEMENT MARKINGS AND STRIPING, SHALL CONFORM TO THE LATEST EDITION OF THE U.S. DEPT. OF TRANSPORTATION, FEDERAL HIGHWAY ADMINISTRATION PUBLICATION "MANUAL ON UNIFORM TRAFFIC CONTROL DEVICES FOR STREET AND HIGHWAYS", "STANDARD ALPHABETS FOR HIGHWAY SIGNS", AND "STANDARD HIGHWAY SIGNS", AND AS AMENDED.
2. ALL CONSTRUCTION WORK AND MATERIALS REQUIRED TO COMPLETE THE AC PAVING, SIGNS, STRIPING, AND MARKINGS SHALL CONFORM TO THE LATEST REVISION OF THE STANDARD DETAIL DRAWINGS AND HAWAII STANDARD SPECIFICATIONS FOR ROAD AND BRIDGE CONSTRUCTION (2005).
3. LAYOUT OF PAVEMENT MARKINGS AND STRIPING SHALL BE DONE BY THE CONTRACTOR AND APPROVED BY THE ENGINEER PRIOR TO ANY INSTALLATION WORK.
4. EXISTING PAVEMENT MARKINGS NOT INCORPORATED IN THE FINAL TRAFFIC PATTERN SHALL BE REMOVED AS DIRECTED BY THE ENGINEER. COSTS SHALL BE INCIDENTAL TO THE VARIOUS PAVEMENT MARKING ITEMS.
5. ALL EXISTING STRIPING TO BE REMOVED SHALL BE ERADICATED BY SANDBLASTING.
6. EDGE LINES SHALL NOT BE CONTINUED THROUGH INTERSECTIONS UNLESS OTHERWISE SHOWN OR DIRECTED.
7. RAISED PAVEMENT MARKERS SHALL NOT BE INSTALLED WITHIN CROSSWALKS.
8. FINAL LOCATIONS OF ALL SIGNS SHALL BE APPROVED BY THE ENGINEER PRIOR TO ANY INSTALLATION WORK.
9. EXISTING SIGNS NOT SHOWN ON THESE PLANS SHALL REMAIN AS POSTED UNLESS OTHERWISE DIRECTED BY THE ENGINEER. REMOVAL AND DISPOSAL OF EXISTING SIGNS AND/OR POSTS AS DESIGNATED ON THESE PLANS SHALL BE INCIDENTAL TO THE VARIOUS SIGNING ITEMS.
10. FINAL LOCATIONS OF ALL STOP LINES SHALL BE APPROVED BY THE ENGINEER PRIOR TO INSTALLATION.
11. ALL PAVEMENT STRIPING SHALL BE AS NOTED ON THE LEGEND OR PLANS.
12. ALL PREFORMED PAVEMENT MARKING TAPES OVER EXISTING PAVEMENT SHALL BE APPLIED WITH AN APPROVED PRIMER AS RECOMMENDED BY THE TAPE MANUFACTURER AND AS APPROVED BY THE ENGINEER. THE PRIMER SHALL BE ALLOWED TO DRY TO THE TACKY STAGE PRIOR TO TAPE APPLICATION.
13. ALL STOP BARS, CROSSWALKS, LEGENDS AND LETTERING SHALL BE THERMOPLASTIC EXTRUSION.
14. ALL STRIPING EXCEPT RAISED PAVEMENT MARKERS WITHIN COUNTY RIGHT-OF-WAY SHALL BE THERMOPLASTIC EXTRUSION.
15. ALL PAINTED STRIPES SHALL BE TWO (2) COATS INDUSTRIAL GRADE TRAFFIC PAINT.
16. FOR LOCATION OF SIGNS AND MARKINGS SEE STRIPING PLAN.
17. ALL SIGNS SHALL BE MADE OF HIGH INTENSITY REFLECTIVE SHEETING MATERIALS.
18. PAVEMENT WORDING SHALL CONFORM TO DOT STANDARD PLAN TE-30 & TE-31.

REVISION	DESCRIPTION	DATE

CLIFFORD N. MUKAI
LICENSED PROFESSIONAL ENGINEER
NO. 6667-C
HAWAII, U.S.A.

License Expires: April 30, 2018

SIGNATURE DATE

THIS WORK WAS PREPARED BY ME OR UNDER MY SUPERVISION AND CONSTRUCTION OF THIS PROJECT WILL BE UNDER MY OBSERVATION "AS DEFINED IN SECTION 16-115-2 OF THE HAWAII ADMINISTRATIVE RULES FOR PROFESSIONAL ENGINEERS, ARCHITECTS, LAND SURVEYORS AND LANDSCAPE ARCHITECTS"

WARREN S. UNEMORI ENGINEERING, INC.
CIVIL & STRUCTURAL ENGINEERS/LAND SURVEYORS
WELLS STREET PROFESSIONAL CENTER, SUITE 403
2145 WELLS STREET, WAILUKU, MAUI, HAWAII 96793

SOUTH MAUI COMMUNITY PARK RECREATION CENTER

PROJECT NO.: P12 / 012 TAX MAP KEY: (2) 2-2-02 : 42
Waiohuli - Keokea (Kihei), Makawao, Maui, Hawaii

TITLE SIGNING & STRIPING DETAILS

B.A.W. DESIGNED BY	C.N.M. CHECKED BY	03031.30 JOB NUMBER	C10.02 SHEET
D.P.T. DRAWN BY	C.N.M. APPROVED BY		OF SHEETS
AS NOTED SCALE		Nov. 1, 2016 DATE	

11-01-2016 (BID SET)

I:\Projects\03proj\03031.30 – South Maui Comm Park – Gymnasium (ADC)\dwg\contions\det-stripe20.dwg

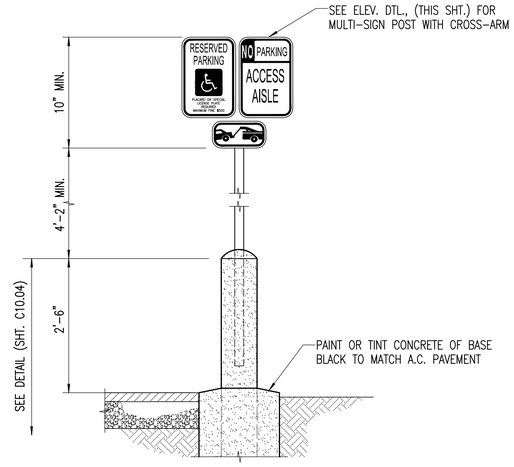

NOTES:

1. ACCESSIBLE PARKING SIGN TO CONFORM TO CURRENT STATE, LOCAL CODES AND REGULATIONS
2. BUILDING MOUNT: MOUNT SIGN ON WALL WITH 2 EXPANSION ANCHORS. COORDINATE WITH BUILDING CONTRACTOR.
3. SEE DETAIL; SHT. C10.04 FOR ADDITIONAL REQUIREMENTS & DETAILS NOT SHOWN HEREON.

1 DETAIL–TYPE "HC–1" POST MOUNTED ACCESSIBLE PARKING SIGN LAYOUT

SCALE: 3/4" = 1'–0"

details/sidewalk/3-4inch.dwg

NOTES:

1. REFER TO SHEET C10.04 FOR SIGN DIMENSIONS AND POST INSTALLATION.
2. REFER TO SHEET C10.04 FOR MULTI-SIGN POST DETAIL.

2 TYPE "HC–1V" POST–MOUNTED ACCESSIBLE PARKING SIGN LAYOUT

SCALE: 3/4" = 1'–0"

3 TYPE "HC–3" POST–MOUNTED ACCESSIBLE PARKING SIGN LAYOUT

SCALE: 3/4" = 1'–0"

4 TYPE "HC–5" POST–MOUNTED ACCESSIBLE PARKING SIGN LAYOUT

SCALE: 3/4" = 1'–0"

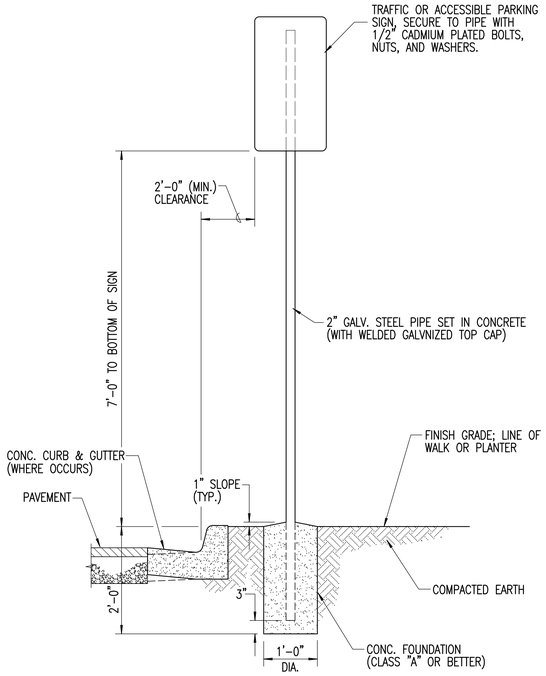

NOTE:

TRAFFIC SIGNS TO BE HIGHWAY STANDARD AND TO CONFORM TO CURRENT STATE, LOCAL CODES AND REGULATIONS.

DETAIL – TRAFFIC & ACCESSIBLE SIGN

NOT TO SCALE

details/sidewalk/5-4inch.dwg

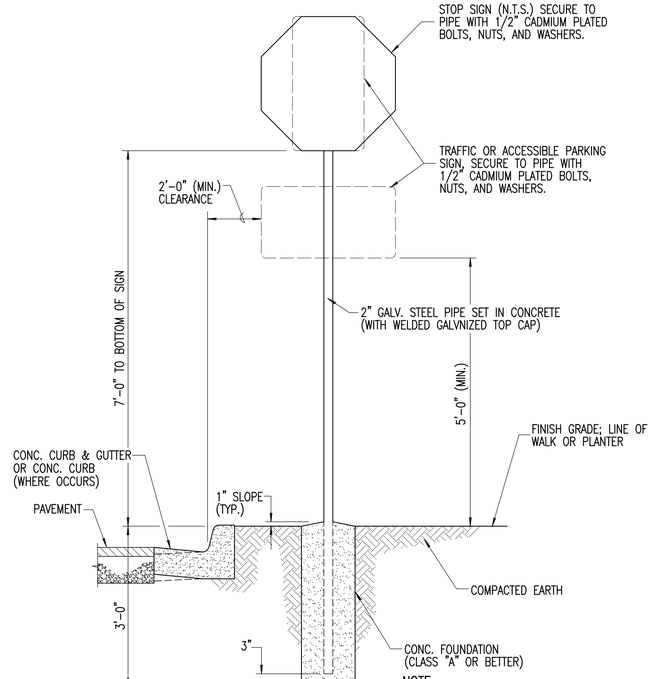

NOTE:

TRAFFIC SIGNS TO BE HIGHWAY STANDARD AND TO CONFORM TO CURRENT STATE, LOCAL CODES AND REGULATIONS.

DETAIL – TRAFFIC SIGN INSTALLATION

NOT TO SCALE

details/sidewalk/3-4inch.dwg

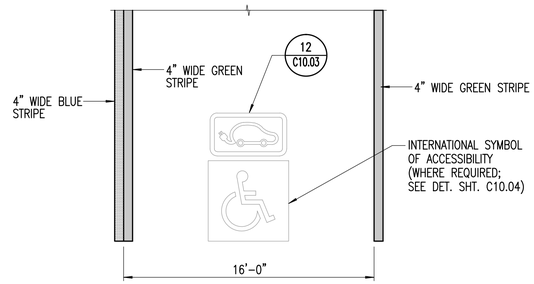

DETAIL – STRIPING LEGEND AT ACCESSIBLE ELECTRICAL VEHICLE CHARGING STATIONS

NOT TO SCALE

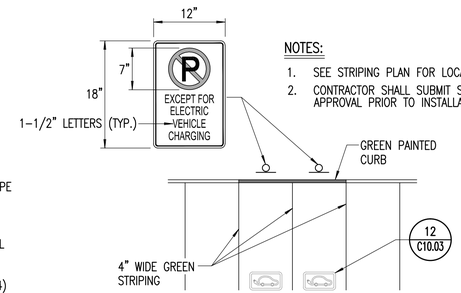

NOTES:

1. SEE STRIPING PLAN FOR LOCATION.
2. CONTRACTOR SHALL SUBMIT SHOP DRAWINGS FOR APPROVAL PRIOR TO INSTALLATION.

DETAIL – STRIPING AND SIGNAGE AT ELECTRIC VEHICLE CHARGING STATIONS

NOT TO SCALE

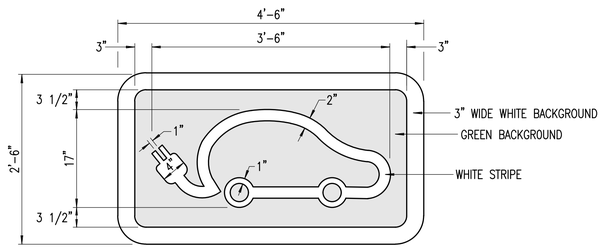

ELECTRIC VEHICLE PARKING SYMBOL

NOT TO SCALE

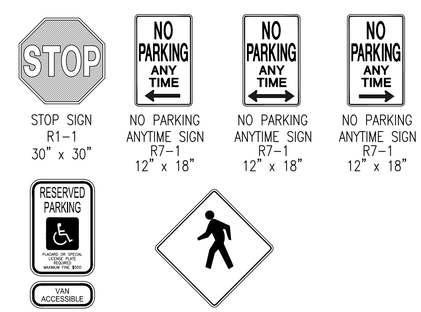

STOP SIGN R1–1 30" x 30"

NO PARKING ANYTIME SIGN R7–1 12" x 18"

NO PARKING ANYTIME SIGN R7–1 12" x 18"

NO PARKING ANYTIME SIGN R7–1 12" x 18"

HANDICAP ACCESSIBLE AND NOTIFICATION SIGN (SEE DET. SHT. C10.04)

W11–2 30" X 30"

REVISION	DESCRIPTION	DATE

CLIFFORD N. MUKAI
LICENSED PROFESSIONAL ENGINEER
NO. 6667–C
HAWAII, U.S.A.

License Expires: April 30, 2018

SIGNATURE DATE

THIS WORK WAS PREPARED BY ME OR UNDER MY SUPERVISION AND CONSTRUCTION OF THIS PROJECT WILL BE UNDER MY OBSERVATION "AS DEFINED IN SECTION 16–115–2 OF THE HAWAII ADMINISTRATIVE RULES FOR PROFESSIONAL ENGINEERS, ARCHITECTS, LAND SURVEYORS AND LANDSCAPE ARCHITECTS"

WARREN S. UNEMORI ENGINEERING, INC.
CIVIL & STRUCTURAL ENGINEERS/LAND SURVEYORS
WELLS STREET PROFESSIONAL CENTER, SUITE 403
2145 WELLS STREET, WAILUKU, MAUI, HAWAII 96793

SOUTH MAUI COMMUNITY PARK RECREATION CENTER

PROJECT NO.: P12 / 012 TAX MAP KEY: (2) 2-2-02 : 42

Waiohuli - Keokea (Kihei), Makawao, Maui, Hawaii

TITLE SIGNING & STRIPING DETAILS

B.A.W. DESIGNED BY	C.N.M. CHECKED BY	03031.30 JOB NUMBER	C10.03 SHEET
D.P.T. DRAWN BY	C.N.M. APPROVED BY	Nov. 1, 2016 DATE	OF SHEETS
SCALE AS NOTED			

11-01-2016 (BID SET)

I:\Projects\03proj\03031.30 - South Maui Comm Park - Gymnasium (ADC)\dwg\constrcn\det-stripe00.dwg

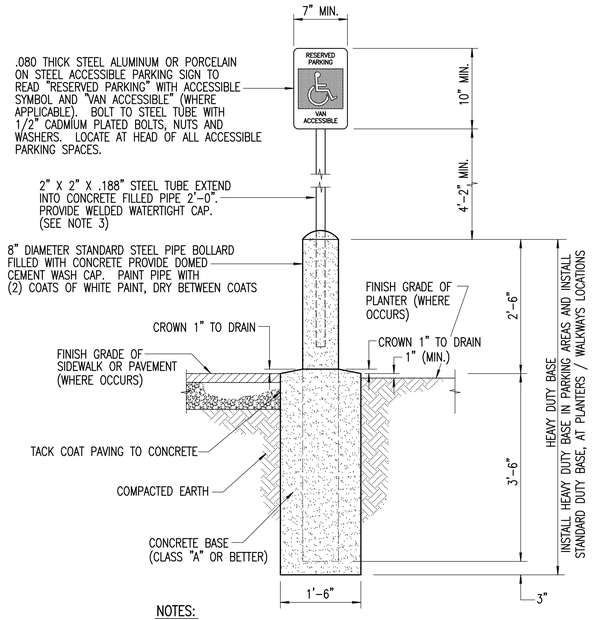

NOTES:

1. ACCESSIBLE PARKING SIGN TO CONFORM TO CURRENT STATE, LOCAL CODES AND REGULATIONS
2. BUILDING MOUNT: MOUNT SIGN ON WALL WITH 2 EXPANSION ANCHORS. COORDINATE WITH BUILDING CONTRACTOR.
3. ALL SIGN POSTS SHALL BE BLACK, INDUSTRIAL-GRADE, URETHANE EPOXY ON HOT DIPPED GALVANIZED POSTS.

1 DETAIL – ACCESSIBLE PARKING SIGN

details/sidewalk/3-4inch.dwg

SCALE: 3/4" = 1'-0"

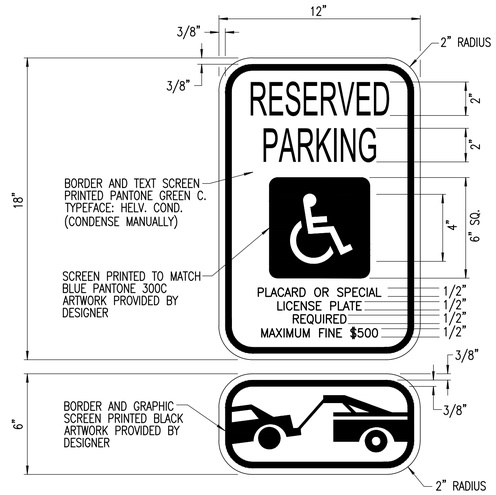

2 DETAIL – RESERVED PARKING SIGN FOR STANDARD ACCESSIBLE STALL

NOT TO SCALE

details/misc/handi-sign.dwg

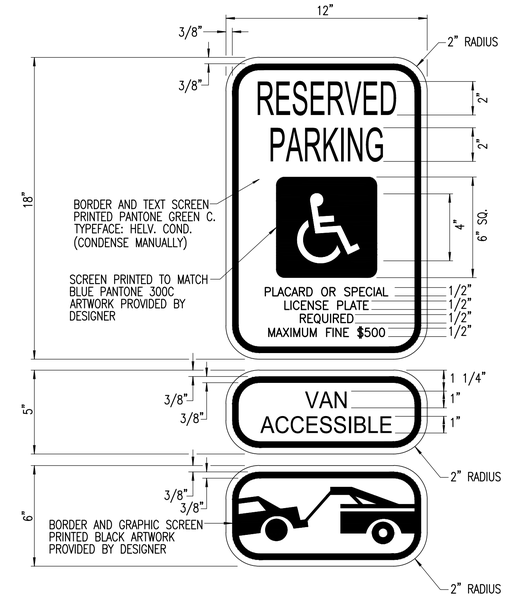

3 DETAIL – RESERVED PARKING SIGN FOR VAN ACCESSIBLE STALL

NOT TO SCALE

details/misc/handi-sign.dwg

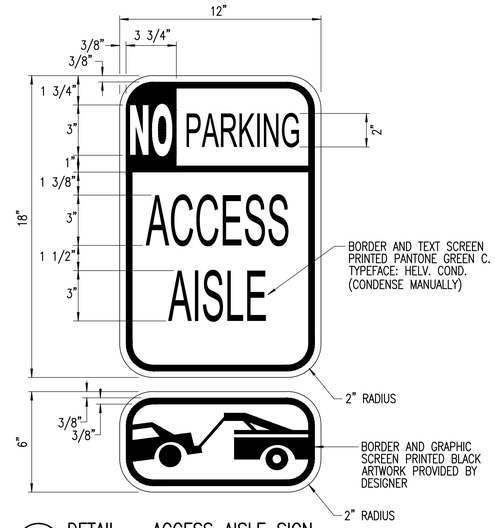

4 DETAIL – ACCESS AISLE SIGN

NOT TO SCALE

details/misc/handi-sign.dwg

NOTES:

1. SIGNS SHALL BE 0.080 (MIN.) THICK ALUM T6061 SHEET COVERED WITH ENGINEERING GRADE REFLECTIVE SHEETING WITH ANTI-GRAFFITI FILM
2. SIGNS SHALL BE MOUNTED TO POSTS WITH THEFT RESISTANT FASTENERS. ALL FASTENERS (INCLUDING WASHERS) SHALL BE STAINLESS STEEL
3. SIGN LETTERING SHALL BE UPPERCASE LETTERS OF THE TYPE APPROVED BY THE FEDERAL HIGHWAY ADMINISTRATION.
4. SIGN TO CONFORM TO CURRENT STATE & COUNTY CODES & REGULATIONS

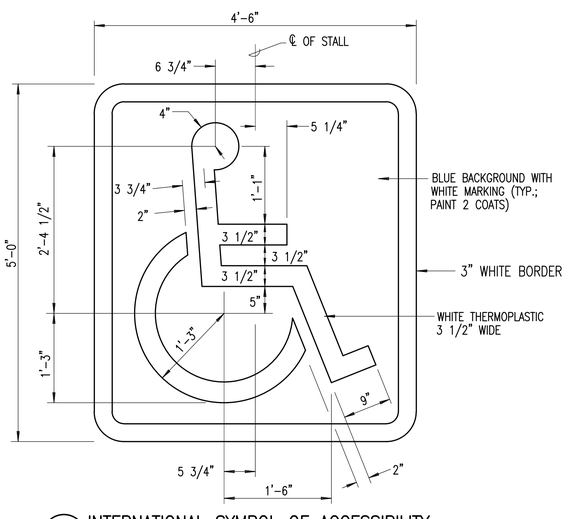

5 INTERNATIONAL SYMBOL OF ACCESSIBILITY

NOT TO SCALE

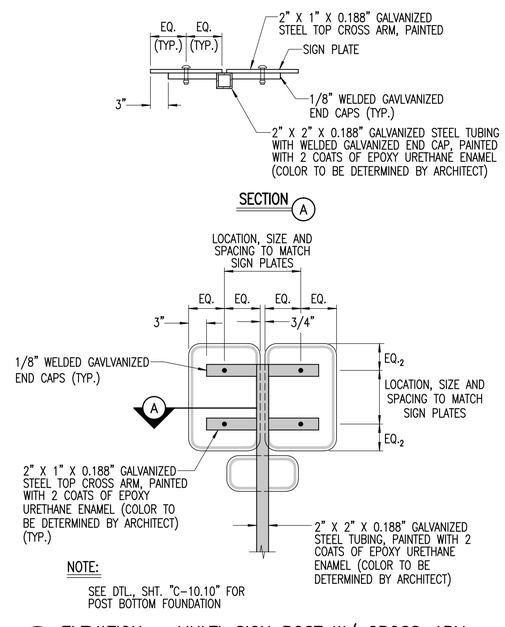

NOTE:

SEE DTL., SHT. "C-10.10" FOR POST BOTTOM FOUNDATION

6 ELEVATION – MULTI-SIGN POST W/ CROSS-ARM

SCALE: 1" = 1'-0"

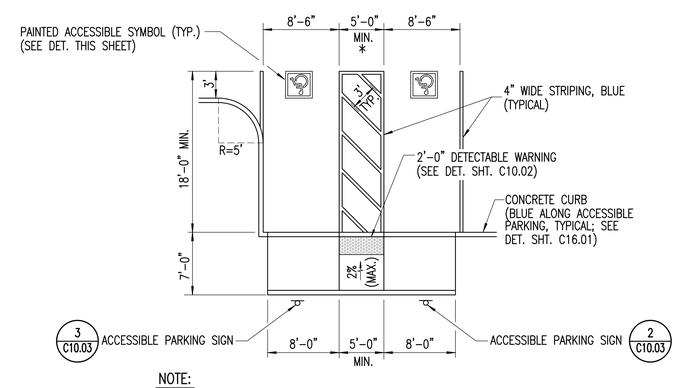

NOTE:

PAINT WITH (2) COATS TRAFFIC PAINT, DRY BETWEEN COATS

* VAN ACCESSIBLE, WHERE SHOWN ON SITE PLAN (SEE SITE PLAN SHTS. C3.02-C3.03 FOR DIMENSIONS)

7 DETAIL – 90 DEGREE ACCESSIBLE PARKING

SCALE: 1/8" = 1'-0"

details/sidewalk/3-4inch.dwg

REVISION	DESCRIPTION	DATE

CLIFFORD N. MUKAI
LICENSED PROFESSIONAL ENGINEER
NO. 6667-C
HAWAII, U.S.A.

License Expires: April 30, 2018

SIGNATURE DATE

THIS WORK WAS PREPARED BY ME OR UNDER MY SUPERVISION AND CONSTRUCTION OF THIS PROJECT WILL BE UNDER MY OBSERVATION "AS DEFINED IN SECTION 16-115-2 OF THE HAWAII ADMINISTRATIVE RULES FOR PROFESSIONAL ENGINEERS, ARCHITECTS, LAND SURVEYORS AND LANDSCAPE ARCHITECTS"

WARREN S. UNEMORI ENGINEERING, INC.
CIVIL & STRUCTURAL ENGINEERS/LAND SURVEYORS
WELLS STREET PROFESSIONAL CENTER, SUITE 403
2145 WELLS STREET, WAILUKU, MAUI, HAWAII 96793

SOUTH MAUI COMMUNITY PARK RECREATION CENTER

PROJECT NO.: P12 / 012 TAX MAP KEY: (2) 2-2-02 : 42
Waiohuli - Keokea (Kihei), Makawao, Maui, Hawaii

TITLE SIGNING & STRIPING DETAILS

B.A.W. DESIGNED BY	C.N.M. CHECKED BY	03031.30 JOB NUMBER	C10.04 SHEET
D.P.T. DRAWN BY	C.N.M. APPROVED BY	Nov. 1, 2016 DATE	OF SHEETS
SCALE AS NOTED			

11-01-2016 (BID SET)

V:\Projects\03proj\03031.30 - South Maui Comm Park - Gymnasium (ADC)\dwg\complans\dtl-stripe00.dwg

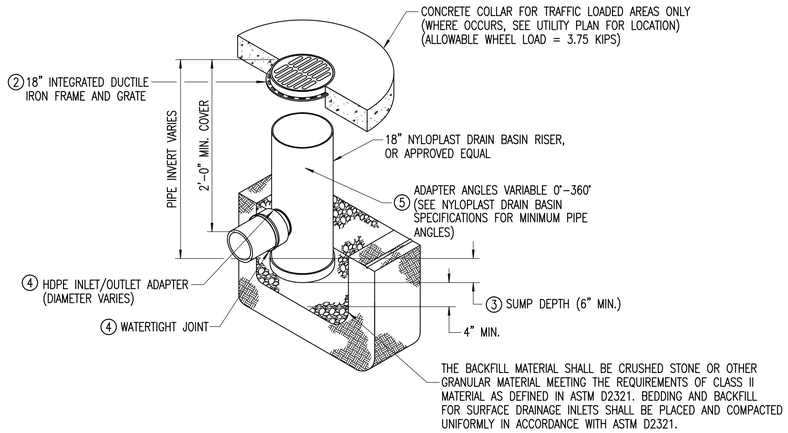

① – GRATES/SOLID COVER SHALL BE DUCTILE IRON PER ASTM A536 GRADE 70-50-05

② – FRAMES SHALL BE DUCTILE IRON PER ASTM A536 GRADE 70-50-05

③ – DRAIN BASIN TO BE CUSTOM MANUFACTURED ACCORDING TO PLAN DETAILS. RIDER ARE NEEDED FOR BASINS OVER 84" DUE TO SHIPPING RESTRICTIONS. SEE DRAWINGS NO. 7001-110-065

④ – DRAINAGE CONNECTION STUB JOINT TIGHTNESS SHALL CONFORM TO ASTM D3212 FOR CORRUGATED HDPE (ADS AND HANCOR DUAL WALL) AND SDR 35 PVC

⑤ – ADAPTERS CAN BE MOUNTED ON ANY ANGLE 0° TO 360°. TO DETERMINE MINIMUM ANGLE BETWEEN ADAPTERS SEE DRAWINGS NO. 7001-110-013.

⑥ – BASINS IN PAVED AREAS SHALL HAVE THE "STANDARD H-20" GRATING WITH CONCRETE COLLAR. BASIN IN GRASSED AREAS SHALL HAVE THE "DROP-IN" TYPE GRATING.

⑦ – ALL GRATED INLET CATCH BASINS SHALL BE INSTALLED WITH KRISTAR FLOW-GARD+PLUS CATCH BASIN FILTER INSERTS; STANDARD DEPTH.

DETAIL – PREFABRICATED 18" AREA DRAIN (CATCH BASIN TYPE "3")

NOT TO SCALE

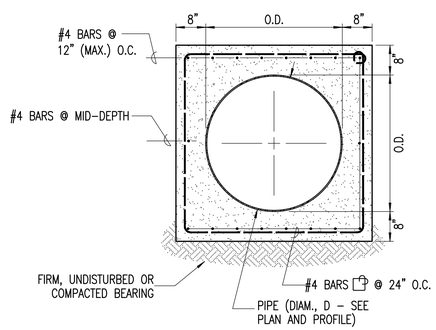

NOTES:

1. CONCRETE: f'_c = 4,000 P.S.I. (MIN.)
2. STEEL REINFORCEMENT: f_y = 60 K.S.I. (ASTM A615 GRADE 60)
3. FOR PRE-CAST APPLICATIONS, CONTRACTOR SHALL SUBMIT STRUCTURALLY-STAMPED SHOP DRAWINGS DETAILING LIFTING CONFIGURATION AND INTEGRAL LIFTING HARDWARE AT LEAST TEN (10) WORKING DAYS PRIOR TO FABRICATION OF STRUCTURE.

DETAIL – REINFORCED CONCRETE JACKET FOR DRAINLINE

SCALE: 1/2" = 1'-0"

STANDARD DRAINAGE DETAILS

THE FOLLOWING DETAILS SHOWN IN THE MAUI COUNTY DEPT. OF PUBLIC WORKS "STANDARD DETAILS FOR PUBLIC WORKS CONSTRUCTION," SEPTEMBER 1984 (AS AMENDED), ARE SPECIFICALLY REFERENCED WITHIN THESE PLANS AND SHALL BE CONSIDERED PART OF THE CONSTRUCTION DRAWINGS. (THIS SHALL NOT BE CONSTRUED TO RELIEVE THE CONTRACTOR FROM COMPLYING WITH ALL APPLICABLE STANDARDS AND STANDARD DETAILS OF THE DEPT. OF PUBLIC WORKS ENGINEERING DIVISION).

PLATE	CONTENTS
D-11 – D-12	TYPE "D" CATCH BASIN
D-22 – D-25	PRE-CAST CONCRETE DRAIN MANHOLE
D-28	TYPE "DA" FRAME
D-44	MONOLITHIC CATCH BASIN CONNECTION

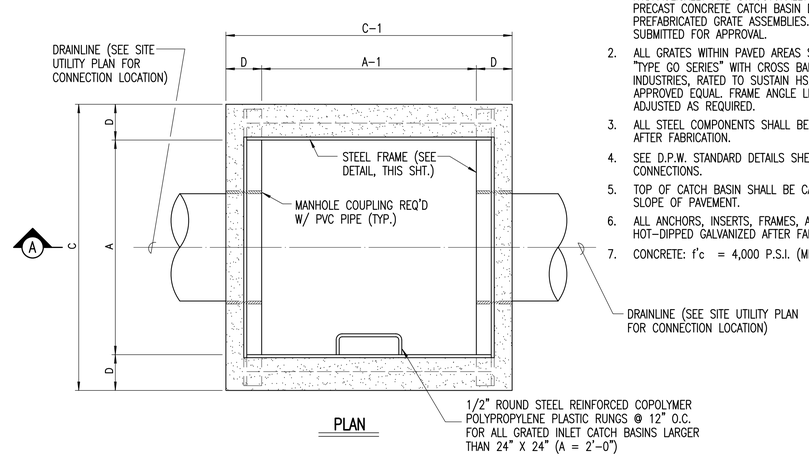

PLAN

NOTES:

1. CONTRACTOR SHALL HAVE OPTION TO SUBSTITUDE APPROVED HYDRAULICALLY AND STRUCTURALLY EQUIVALENT OR BETTER PRECAST CONCRETE CATCH BASIN DROP INLETS AND PREFABRICATED GRATE ASSEMBLIES. SHOP DRAWINGS SHALL BE SUBMITTED FOR APPROVAL.
2. ALL GRATES WITHIN PAVED AREAS SHALL BE GARY GRATING "TYPE GO SERIES" WITH CROSS BARS (MANUFACTURED BY IKG INDUSTRIES, RATED TO SUSTAIN HS20-44 LOADING, OR APPROVED EQUAL. FRAME ANGLE LEG DIMENSIONS SHALL BE ADJUSTED AS REQUIRED.
3. ALL STEEL COMPONENTS SHALL BE HOT-DIPPED GALVANIZED AFTER FABRICATION.
4. SEE D.P.W. STANDARD DETAILS SHEET "D-44" FOR CORNER CONNECTIONS.
5. TOP OF CATCH BASIN SHALL BE CAST-IN-PLACE TO MATCH SLOPE OF PAVEMENT.
6. ALL ANCHORS, INSERTS, FRAMES, AND COVERS SHALL BE HOT-DIPPED GALVANIZED AFTER FABRICATION.
7. CONCRETE: f'c = 4,000 P.S.I. (MIN.)

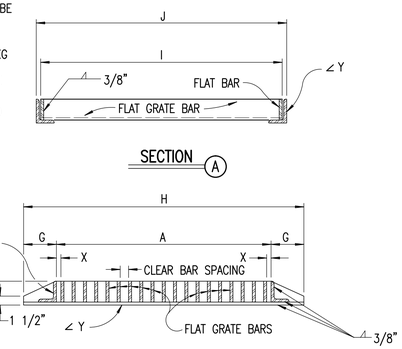

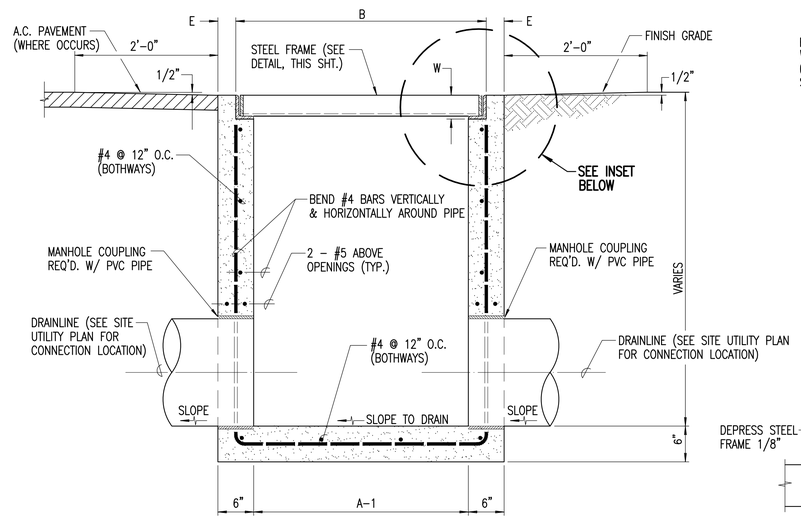

A SECTION
SCALE: 1" = 1'-0"

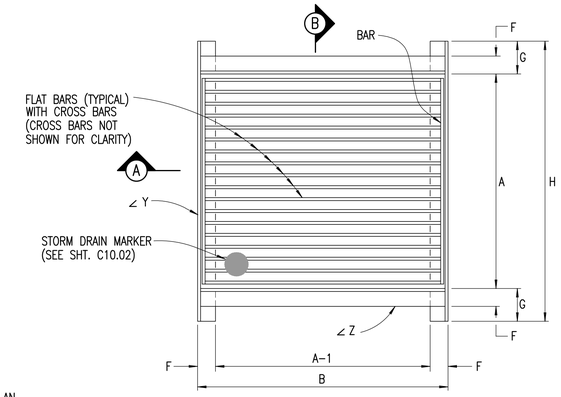

PLAN

DETAILS – GRATE & FRAME

SCALE: 1" = 1'-0"

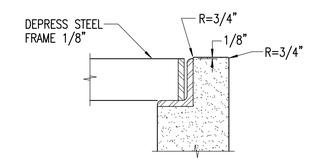

SEE INSET

TABLE OF DIMENSIONS FOR CATCH BASIN & GRATE

TYPE	DIMENSION	A	A-1	B	C	C-1	D	E	F	G	H	I	J	FLAT GRADE BAR	W	X	Y	Z	NO.BARS	CLEAR BAR SPACING
1	24" x 24"	2'-0"	2'-0"	2'-6"	3'-0"	3'-0"	6"	3"	2 1/2"	5 1/2"	2'-11"	2'-4 1/4"	2'-6"	1/2" x 3"	3 1/2"	3/4"	3 1/2" x 2 1/2" x 1/2"	3" x 2 1/2" x 1/2"	23	1/2"
2	36" x 36"	3'-0"	3'-0"	3'-6"	4'-0"	4'-0"	6"	3"	3"	5 1/2"	3'-11"	3'-4 1/4"	3'-6"	1/2" x 3 1/2"	4"	3/4"	4" x 3" x 1/2"	3 1/2" x 3" x 1/2"	35	1/2"

NOTES: 1. "*" DENOTES GRATED INLET CATCH BASINS TO BE USED ONLY WITHIN LANDSCAPED AREAS.

2. ALL GRATED DRAIN INLET CATCH BASINS (INCLUDING BUT NOT LIMITED TO STANDARD GRATED DRAIN INLETS AND HDOT TYPES 61214, 61614, AND 61616 GRADED DRAIN INLETS) SHALL BE INSTALLED WITH KRISTAR FLO-GARD+PLUS CATCH BASIN FILTER INSERTS; (STANDARD DEPTH), UPON COMPLETION OF ALL IMPROVEMENTS & UPON ESTABLISHMENT OF ALL GRASS & GROUND COVER. CONTRACTOR SHALL SUBMIT SHOP DRAWINGS FOR REVIEW AND APPROVAL PRIOR TO FABRICATION OF DRAIN INLET CATCH BASINS.

CATCH BASIN DETAILS TYPE 1 & 2

SCALE: 1" = 1'-0"

REVISION	DESCRIPTION	DATE

CLIFFORD N. MUKAI
LICENSED PROFESSIONAL ENGINEER
NO. 6667-C
HAWAII, U.S.A.

License Expires: April 30, 2018

SIGNATURE DATE

THIS WORK WAS PREPARED BY ME OR UNDER MY SUPERVISION AND CONSTRUCTION OF THIS PROJECT WILL BE UNDER MY OBSERVATION "AS DEFINED IN SECTION 16-115-2 OF THE HAWAII ADMINISTRATIVE RULES FOR PROFESSIONAL ENGINEERS, ARCHITECTS, LAND SURVEYORS AND LANDSCAPE ARCHITECTS"

WARREN S. UNEMORI ENGINEERING, INC.
CIVIL & STRUCTURAL ENGINEERS/LAND SURVEYORS
WELLS STREET PROFESSIONAL CENTER, SUITE 403
2145 WELLS STREET, WAILUKU, MAUI, HAWAII 96793

SOUTH MAUI COMMUNITY PARK RECREATION CENTER

PROJECT NO.: P12 / 012 TAX MAP KEY: (2) 2-2-02 : 42
Waiohuli - Keokea (Kihei), Makawao, Maui, Hawaii

TITLE DRAINAGE DETAILS

B.A.W. DESIGNED BY	C.N.M. CHECKED BY	03031.30 JOB NUMBER	C11.01 SHEET
D.P.T. DRAWN BY	C.N.M. APPROVED BY	Nov. 1, 2016 DATE	OF SHEETS
SCALE AS NOTED			

11-01-2016 (BID SET)

I:\Projects\03proj\03031.30 - South Maui Comm Park - Gymnasium (ADC)\dwg\construct\det-drain-00.dwg

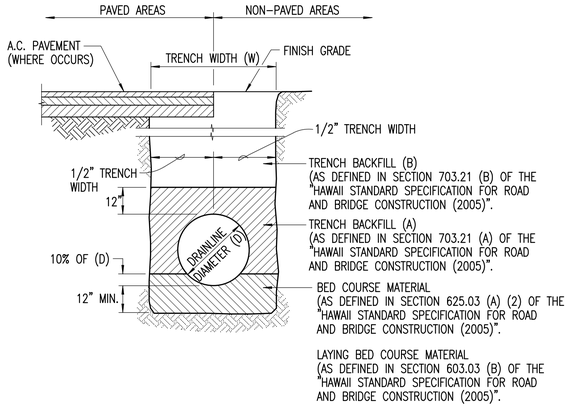

NOTES:

1. TRENCH BACKFILL AND BED COURSE MATERIAL SHALL COMFORM TO SECTION 703 "AGGREGATES" OF THE "HAWAII STANDARD SPECIFICATION FOR ROAD AND BRIDGE CONSTRUCTION (2005)".
2. INSTALLATION OF CULVERTS SHALL CONFORM TO SECTION 603, "CULVERTS AND STROM DRAINS" OF THE "HAWAII STANDARD SPECIFICATION FOR ROAD AND BRIDGE CONSTRUCTION (2005)".
3. TRENCH WIDTHS SHALL CONFORM TO TABLE 625.03-1 OF THE "HAWAII STANDARD SPECIFICATIONS FOR ROAD AND BRIDGE CONSTRUCTION (2005)".
4. LOADS IMPOSED BY CONSTRUCTION VEHICLES WITH AXLE LOADS IN EXCESS OF THE AASHTO HS-20-44 VEHICLE (32,000 LBS./AXLE) SHOULD BE MINIMIZED BY DESIGNATED CONSTRUCTION VEHICLE CROSSINGS. ADDITIONAL FILL SHOULD BE PLACED OVER THE DRAINLINES AT THE DESIGNATED CONSTRUCTION VEHICLE CROSSINGS IN STRICT ACCORDANCE WITH THE MANUFACTURER'S RECOMMENDATIONS, OR STRUTTING TO SUPPORT THE PIPE SHOULD BE PLACED IN ACCORDANCE WITH THE CURRENT "HAWAII STANDARD SPECIFICATION FOR ROAD AND BRIDGE CONSTRUCTION (2005)". ALL DRAINLINES DAMAGED BY CONSTRUCTION VEHICLE LOADING SHALL BE REPLACED AT THE CONTRACTOR'S EXPENSE.

TYPICAL TRENCH SECTION FOR PVC DRAINLINE

NOT TO SCALE

w:/details/drain/trnch004.dwg

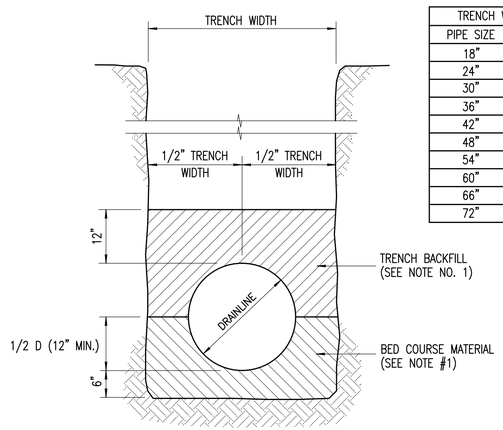

TRENCH WIDTH	
PIPE SIZE	W
18"	54"
24"	60"
30"	66"
36"	72"
42"	78"
48"	84"
54"	90"
60"	96"
66"	102"
72"	108"

NOTES:

1. BED COURSE AND TRENCH BACKFILL MATERIAL SHALL CONFORM TO SECTION 703, "AGGREGATES" OF THE "HAWAII STANDARD SPECIFICATIONS FOR ROAD AND BRIDGE CONSTRUCTION (2005)."
2. LOADS IMPOSED BY CONSTRUCTION VEHICLES WITH AXLE LOADS IN EXCESS OF THE AASHTO HS-20-44 VEHICLE (32,000 LBS./AXLE) SHOULD BE MINIMIZED BY DESIGNATED CONSTRUCTION VEHICLE CROSSINGS. ADDITIONAL FILL SHOULD BE PLACED OVER THE DRAINLINES AT THE DESIGNATED CONSTRUCTION VEHICLE CROSSINGS IN STRICT ACCORDANCE WITH THE MANUFACTURER'S RECOMMENDATIONS, OR STRUTTING TO SUPPORT THE PIPE SHOULD BE PLACED IN ACCORDANCE WITH THE CURRENT "HAWAII STANDARD SPECIFICATIONS FOR ROAD AND BRIDGE CONSTRUCTION (2005)." ALL DRAINLINES DAMAGED BY CONSTRUCTION VEHICLE LOADING SHALL BE REPLACED AT THE CONTRACTOR'S EXPENSE.

TYPICAL TRENCH SECTION FOR HDPE DRAINLINE

NOT TO SCALE

w:/details/drain/trnch004.dwg

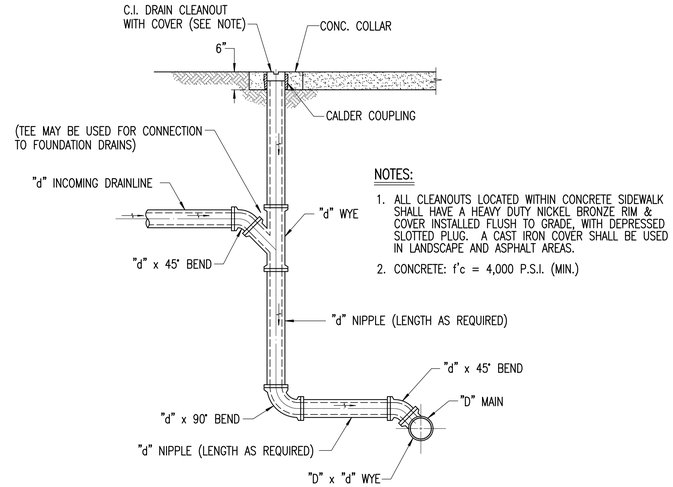

NOTES:

1. ALL CLEANOUTS LOCATED WITHIN CONCRETE SIDEWALK SHALL HAVE A HEAVY DUTY NICKEL BRONZE RIM & COVER INSTALLED FLUSH TO GRADE, WITH DEPRESSED SLOTTED PLUG. A CAST IRON COVER SHALL BE USED IN LANDSCAPE AND ASPHALT AREAS.
2. CONCRETE: f'c = 4,000 P.S.I. (MIN.)

DETAIL – DRAIN CLEANOUT TO GRADE DROP CONNECTION

SCALE: 1/2" = 1'-0"

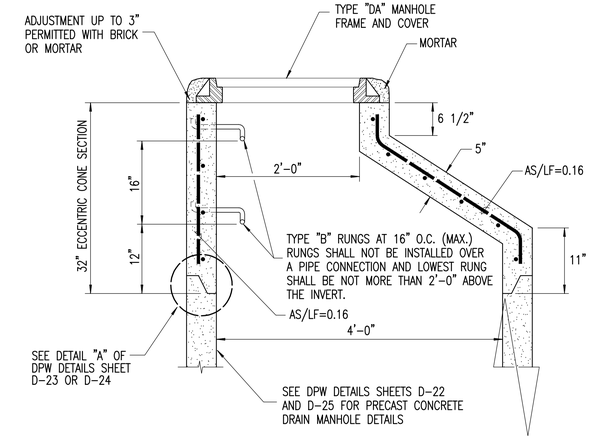

PRE-CAST CONC. ECCENTRIC DRAIN MANHOLE CONE

SCALE: 1" = 1'

details/drain/drnin-cone.dwg

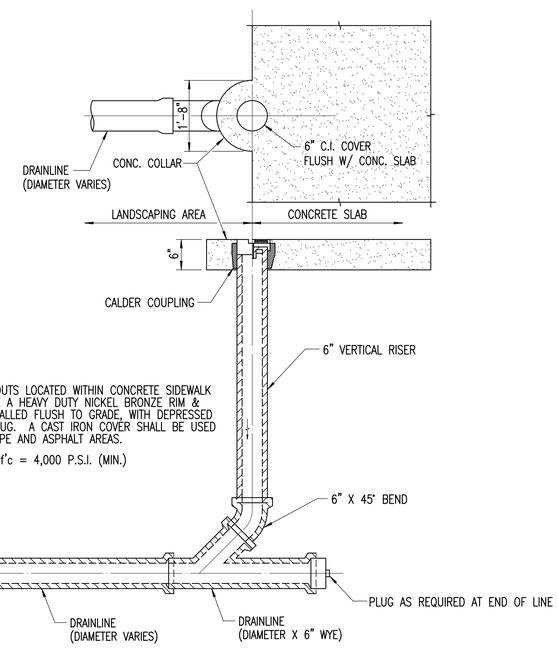

NOTES:

1. ALL CLEANOUTS LOCATED WITHIN CONCRETE SIDEWALK SHALL HAVE A HEAVY DUTY NICKEL BRONZE RIM & COVER INSTALLED FLUSH TO GRADE, WITH DEPRESSED SLOTTED PLUG. A CAST IRON COVER SHALL BE USED IN LANDSCAPE AND ASPHALT AREAS.
2. CONCRETE: f'c = 4,000 P.S.I. (MIN.)

DETAIL – DRAINLINE CLEANOUT TO GRADE

NOT TO SCALE

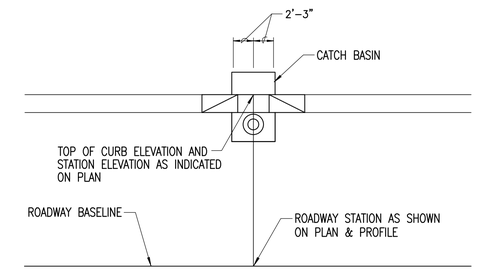

TYPE "B" MOD. CATCH BASIN

(SEE DPW STANDARD DETAILS)

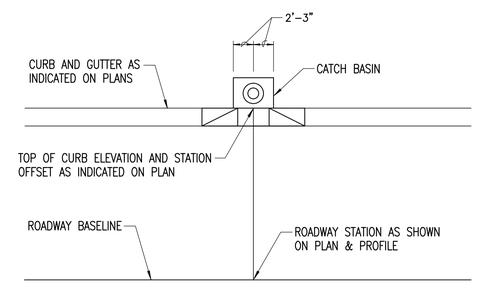

TYPE "D" CATCH BASIN

(SEE DPW STANDARD DETAILS)

DETAIL – CATCH BASIN STATIONING PLACEMENT

NOT TO SCALE

NOTE:

GRATED INLET CATCH BASIN STATIONING SHALL BE REFERENCED AT CENTER OF STRUCTURE.

REVISION	DESCRIPTION	DATE

CLIFFORD N. MUKAI
LICENSED PROFESSIONAL ENGINEER
NO. 6667-C
HAWAII, U.S.A.

SIGNATURE — DATE — License Expires: April 30, 2018

THIS WORK WAS PREPARED BY ME OR UNDER MY SUPERVISION AND CONSTRUCTION OF THIS PROJECT WILL BE UNDER MY OBSERVATION "AS DEFINED IN SECTION 16-115-2 OF THE HAWAII ADMINISTRATIVE RULES FOR PROFESSIONAL ENGINEERS, ARCHITECTS, LAND SURVEYORS AND LANDSCAPE ARCHITECTS".

WARREN S. UNEMORI ENGINEERING, INC.
CIVIL & STRUCTURAL ENGINEERS/LAND SURVEYORS
WELLS STREET PROFESSIONAL CENTER, SUITE 403
2145 WELLS STREET, WAILUKU, MAUI, HAWAII 96793

SOUTH MAUI COMMUNITY PARK RECREATION CENTER

PROJECT NO.: P12 / 012 TAX MAP KEY: (2) 2-2-02 : 42
Waiohuli - Keokea (Kihei), Makawao, Maui, Hawaii

TITLE DRAINAGE DETAILS

B.A.W. DESIGNED BY	C.N.M. CHECKED BY	03031.30 JOB NUMBER	C11.02 SHEET
D.P.T. DRAWN BY	C.N.M. APPROVED BY	Nov. 1, 2016 DATE	OF SHEETS
AS NOTED SCALE			

11-01-2016 (BID SET)

I:\Projects\03proj\03031.30 - South Maui Comm Park - Gymnasium (ADC)\dwg\conptans\det-drain-00.dwg

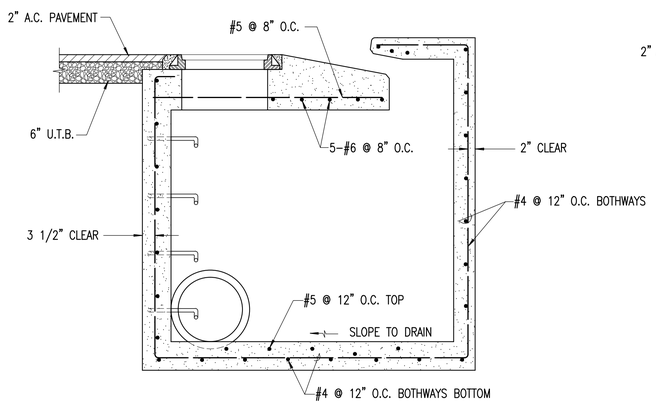

C SECTION

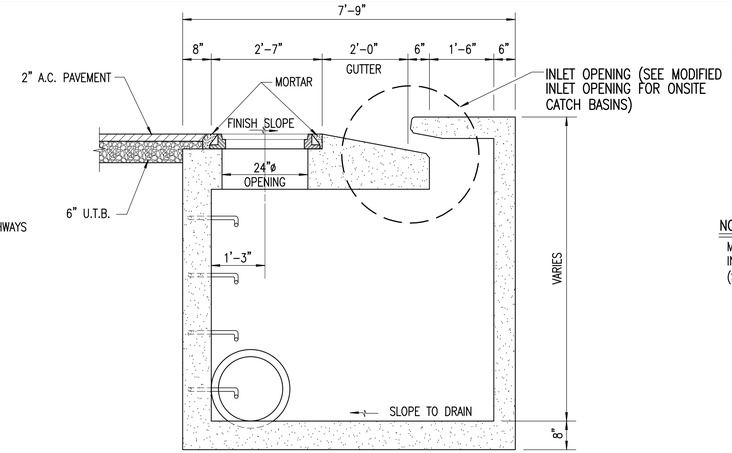

A SECTION

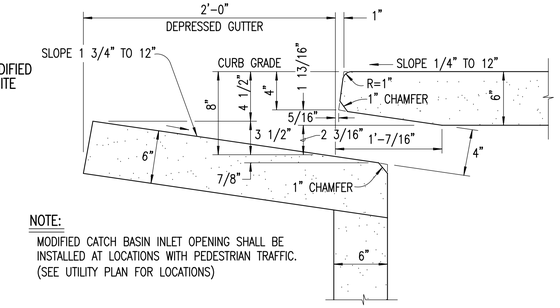

NOTE:
MODIFIED CATCH BASIN INLET OPENING SHALL BE INSTALLED AT LOCATIONS WITH PEDESTRIAN TRAFFIC. (SEE UTILITY PLAN FOR LOCATIONS)

INSET – INLET OPENING FOR ONSITE CATCH BASINS

MODIFIED INLET OPENING FOR ONSITE CATCH BASINS

NOT TO SCALE

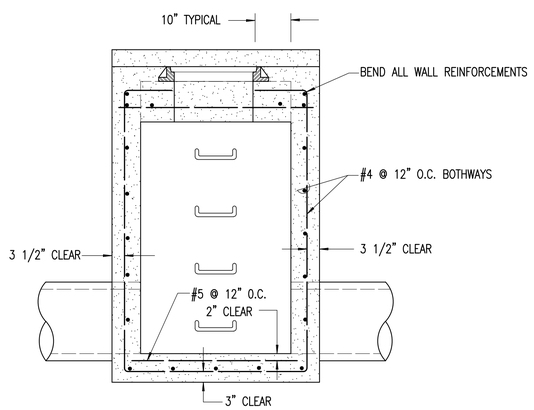

B SECTION

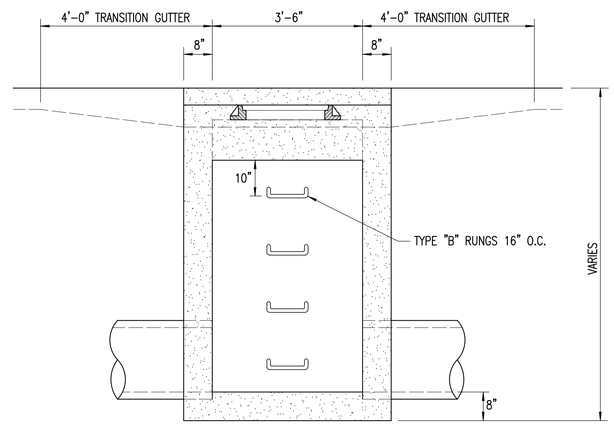

ELEVATION

NOTES:

1. PROVIDE 2 CU. FT. OF CRUSHED ROCK ASTM SIZE NO. 9 ROCK SAND, AT WEEP HOLE.
2. RUNGS SHALL NOT BE INSTALLED OVER A PIPE CONNECTION AND LOWEST RUNG SHALL BE NOT MORE THAN 2'-0" ABOVE THE INVERT.
3. CATCH BASIN SHALL BE CONSTRUCTED IN ACCORDANCE WITH THE HAWAI'I STANDARD SPECIFICATIONS FOR ROAD AND BRIDGE CONSTRUCTION (2005) AND ITS AMENDMENTS.
4. CONCRETE: f'c = 4,000 P.S.I. (MIN.)

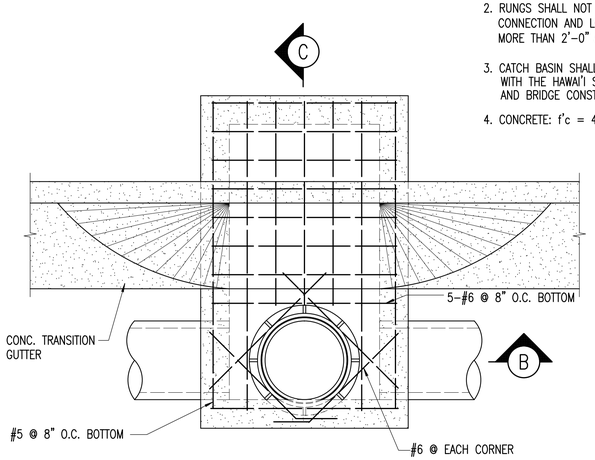

PLAN

REINFORCEMENT DETAILS

NOT TO SCALE

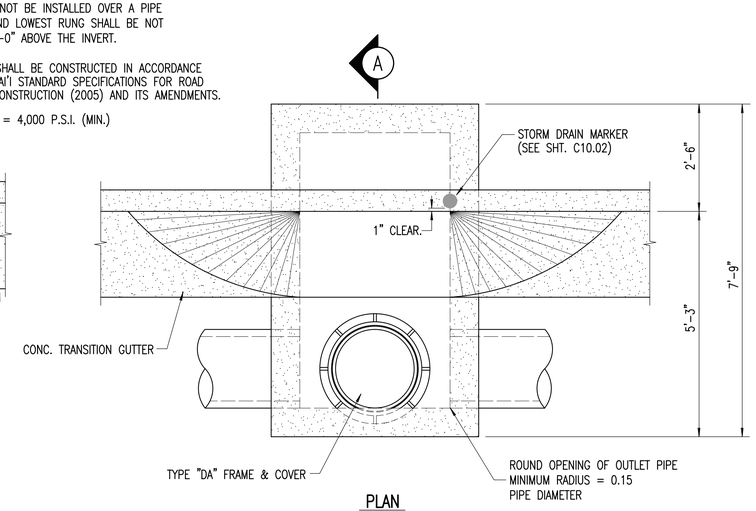

PLAN

MODIFIED TYPE "B" CATCH BASIN

NOT TO SCALE

details/drain/cbmod001.dwg

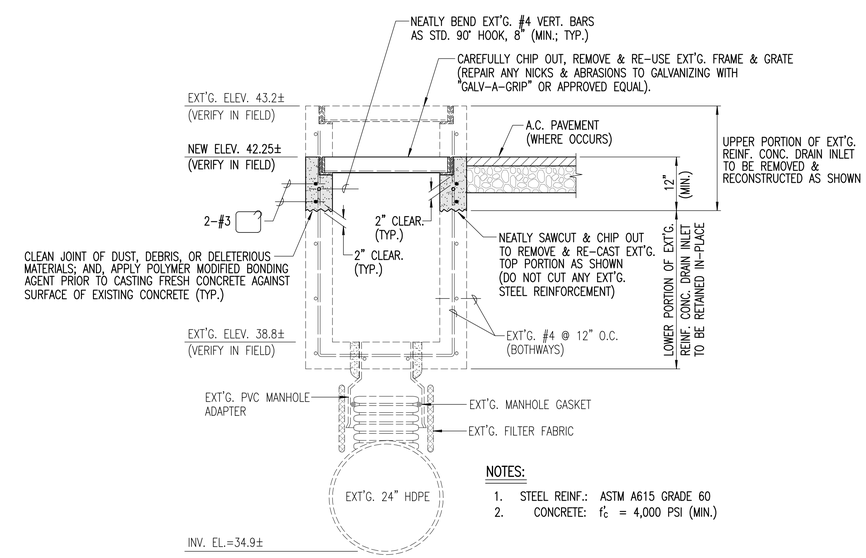

NOTES:

1. STEEL REINF.: ASTM A615 GRADE 60
2. CONCRETE: f'_c = 4,000 PSI (MIN.)

DETAIL – GICB #A-1 ADJUSTMENT TO NEW FINISH GRADE

SCALE: 3/4" = 1'-0"

CLIFFORD N. MUKAI
LICENSED PROFESSIONAL ENGINEER
NO. 6667-C
HAWAII, U.S.A.

License Expires: April 30, 2018

SIGNATURE DATE

THIS WORK WAS PREPARED BY ME OR UNDER MY SUPERVISION AND CONSTRUCTION OF THIS PROJECT WILL BE UNDER MY OBSERVATION "AS DEFINED IN SECTION 16-115-2 OF THE HAWAII ADMINISTRATIVE RULES FOR PROFESSIONAL ENGINEERS, ARCHITECTS, LAND SURVEYORS AND LANDSCAPE ARCHITECTS"

REVISION	DESCRIPTION	DATE

WARREN S. UNEMORI ENGINEERING, INC.
CIVIL & STRUCTURAL ENGINEERS/LAND SURVEYORS
WELLS STREET PROFESSIONAL CENTER, SUITE 403
2145 WELLS STREET, WAILUKU, MAUI, HAWAII 96793

SOUTH MAUI COMMUNITY PARK RECREATION CENTER

PROJECT NO.: P12 / 012 TAX MAP KEY: (2) 2-2-02 : 42
Waiohuli - Keokea (Kihei), Makawao, Maui, Hawaii

TITLE DRAINAGE DETAILS

B.A.W. DESIGNED BY	C.N.M. CHECKED BY	03031.30 JOB NUMBER	C11.03 SHEET
D.P.T. DRAWN BY	C.N.M. APPROVED BY	Nov. 1, 2016 DATE	OF SHEETS
SCALE AS NOTED			

11-01-2016 (BID SET)

\A\Projects\03proj\03031.30 - South Maui Comm Park - Gymnasium (ADC)\dwg\compliance\det-drain-00.dwg

NOTES:

1. PIPE CUSHION AND BACKFILL MATERIAL SHALL CONFORM TO SECTION 209, "PREMOLDED FILLER, CRUSHED ROCK, PIPE CUSHION, BACKFILL MATERIAL AND BRICKS" OF "WATER SYSTEM STANDARDS, STATE OF HAWAII (2002)."
2. INSTALLATION OF WATERLINES SHALL CONFORM TO SECTION 302, "WATER MAINS AND APPURTENANCES" OF "WATER SYSTEM STANDARDS, STATE OF HAWAII (2002)."
3. TRENCH WIDTH SHALL CONFORM TO TABLE 624.03-1 OF SECTION 624.03(B) OF THE "HAWAII STANDARD SPECIFICATIONS FOR ROAD AND BRIDGE CONSTRUCTION (2005) AND SECTION 302.02 OF THE WATER SYSTEM STANDARDS 2002, STATE OF HAWAII."
4. WHEN TRENCHING ACROSS EXISTING SIDEWALK, CONTRACTOR SHALL SAW CUT AT EXISTING SCORELINES AND REMOVE ALL SIDEWALK PANELS AFFECTED BY TRENCH.

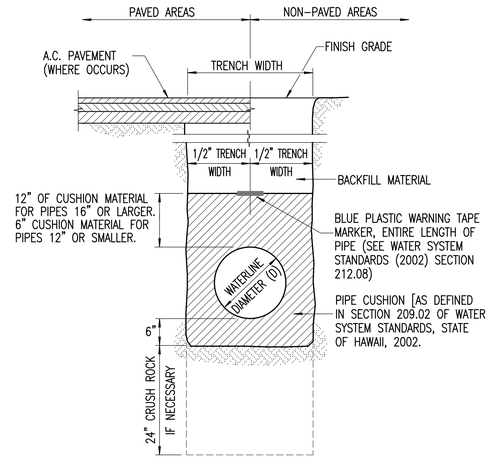

TYPICAL TRENCH SECTION FOR WATERLINES

NOT TO SCALE

THE FOLLOWING DETAILS AS SHOWN ON "APPROVED MATERIAL LIST AND STANDARD DETAILS FOR WATER SYSTEM CONSTRUCTION, STATE OF HAWAII, 2002", ARE SPECIFICALLY REFERENCED WITHIN THESE PLANS AND SHALL BE CONSIDERED PART OF THE CONSTRUCTION DRAWINGS. (THIS SHALL NOT BE CONSTRUED TO RELIEVE CONTRACTOR FROM COMPLYING WITH ALL PERTINENT PARTS OF THE AFOREMENTIONED LIST, STANDARD DETAILS AND STANDARDS.)

PLATE	CONTENTS
B1	REINFORCED CONCRETE JACKET – TYPICAL DETAIL
B2	HORIZONTAL THRUST BLOCK FOR WATER MAINS
B3	HORIZONTAL THRUST BLOCK – MINIMUM BEARING AREAS
B16 – B-21	CONCRETE THRUST BEAM
FH6	HYDRANT CONNECTION – STRAIGHT RUN
FH7	HYDRANT CONNECTION – WITH ELBOW
FH8	HYDRANT CONNECTION NOTES
FH12	HYDRANT MARKER
L23	SERVICE LATERALS AND CONNECTIONS – STANDARD SIZING ARRANGEMENTS
L24	TYPICAL SERVICE LATERAL
M11	METAL MANHOLE COVER
M12	1 1/2" & 2" METER MANHOLE
MH12	MANHOLE DETAIL OF LINTEL AND FILLER
MH17	MANHOLE FRAME AND COVER (CAST IRON, 24" SIZE)
M23R	DOUBLE-CHECK DETECTOR ASSEMBLY
MH44	METAL MANHOLE COVER
P10	TRENCH BACKFILL
V3	VALVE FRAME AND COVER
V4	AIR RELIEF VALVE CONNECTION
V9	BACKFLOW PREVENTER
V12	SLIDING VALVE BOX ASSEMBLY
V15	12" VALVE BOX INSTALLATION
V16	12" VALVE BOX
V15	VALVE NUT EXTENSION
V21	CLEANOUT
V23	ARV INSTALLATION – TYPE "F" MANHOLE
20	CORPORATION STOP – LAYOUT AND SIZES
99	STOP COCK

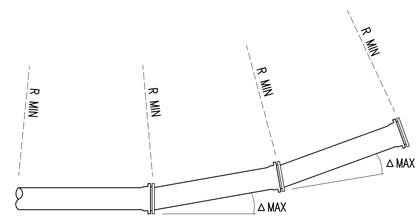

NOTES:

1. CONTRACTOR SHALL LIMIT FULL LENGTH DEFLECTIONS (Δ MAX) FOR PUSH-ON TYPE JOINT & MECHANICAL JOINT PIPES TO 80% OF THE MAXIMUM ALLOWABLE DEFLECTIONS SPECIFIED BY THE MANUFACTURER, OR THE VALUES SPECIFIED AS FOLLOWS, WHICHEVER IS LESS :

SIZE OF PIPE	Δ MAX	O/S PER 18' LENGTH
12" & LESS	4°	15"
14" TO 20"	2°15'	8"
24" TO 48"	1°30'	5"

2. FOR DUCTILE IRON PIPE ONLY.

DETAIL – HORIZ. & VERT.

DUCTILE IRON PIPE DEFLECTION

NOT TO SCALE

REVISION	DESCRIPTION	DATE

CLIFFORD N. MUKAI
LICENSED PROFESSIONAL ENGINEER
NO. 6667-C
HAWAII, U.S.A.

License Expires: April 30, 2010

SIGNATURE DATE

THIS WORK WAS PREPARED BY ME OR UNDER MY SUPERVISION AND CONSTRUCTION OF THIS PROJECT WILL BE UNDER MY OBSERVATION "AS DEFINED IN SECTION 16-115-2 OF THE HAWAII ADMINISTRATIVE RULES FOR PROFESSIONAL ENGINEERS, ARCHITECTS, LAND SURVEYORS AND LANDSCAPE ARCHITECTS"

WARREN S. UNEMORI ENGINEERING, INC.
CIVIL & STRUCTURAL ENGINEERS/LAND SURVEYORS
WELLS STREET PROFESSIONAL CENTER, SUITE 403
2145 WELLS STREET, WAILUKU, MAUI, HAWAII 96793

SOUTH MAUI COMMUNITY PARK RECREATION CENTER

PROJECT NO.: P12 / 012 TAX MAP KEY: (2) 2-2-02 : 42

Waiohuli - Keokea (Kihei), Makawao, Maui, Hawaii

TITLE WATER DETAILS

B.A.W. DESIGNED BY	C.N.M. CHECKED BY	03031.30 JOB NUMBER	C12.01 SHEET
D.P.T. DRAWN BY	C.N.M. APPROVED BY	Nov. 1, 2016 DATE	OF SHEETS
AS NOTED SCALE			

11-01-2016 (BID SET)

V:\Projects\03proj\03031.30 - South Maui Comm Park - Gymnasium (ADC)\dwg\contions\det-water-00.dwg

11-01-2016 (BID SET)

MATERIALS LIST

ITEM	QUANTITIY	DESCRIPTION
1	2	12" AWWA GATE VALVE, FE x FE, WITH HANDWHEEL AND SUPPORT
2	1	12" WATTS MODEL 774 DOUBLE CHECK DETECTOR ASSEMBLY, FE (USC APPROVED) WITH BADGER METER INC., BYPASS METER
3	1	12" FLANGED COUPLING ADAPTER
4	1	12" D.I. FABRICATED WALL PIPE, CL. 53, FE x PE, (LENGTH AS REQ'D. – 12" MIN.)
5	2	12" D.I. PIPE, CL. 53, FE x BELL, (LENGTH AS REQ'D.)
6	2	12" D.I. PIPE, CL. 52 NIPPLE, (LENGTH AS REQ'D.)
7	2	12" D.I. PIPE, CL. 52 NIPPLE (LENGTH AS REQ'D.)
8	2	THRUST BEAM (SEE DET. THIS SHT.)
9	1	STOPCOCK W/ CLAMP FOR PADLOCK
10	1	DCV
11	1	METER

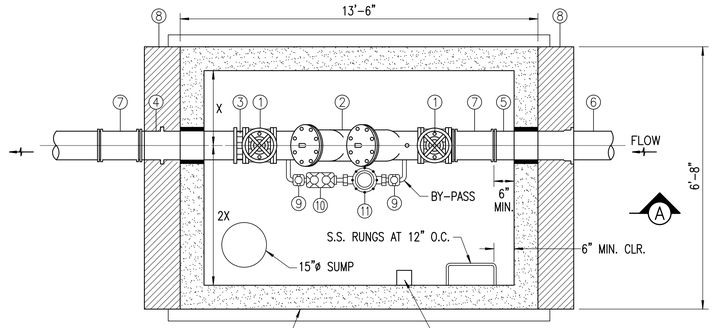

SEE DWS STD. DET. M23 FOR MANHOLE DETAILS

PLAN

TRANSPONDER BRACKET (LOCATE DIRECTLY BELOW LIFTING HOLE ADJACENT TO METER. SEE DET. THIS SHEET FOR TRANSPONDER MOUNTING DETAILS) (IF REQUIRED BY DEPARTMENT OF WATER)

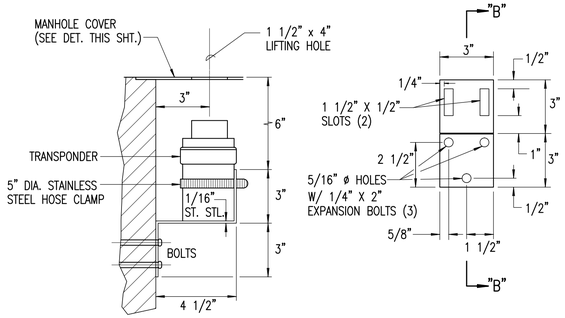

SECTION "B"–"B"

TRANSPONDER BRACKET DETAIL

NOT TO SCALE

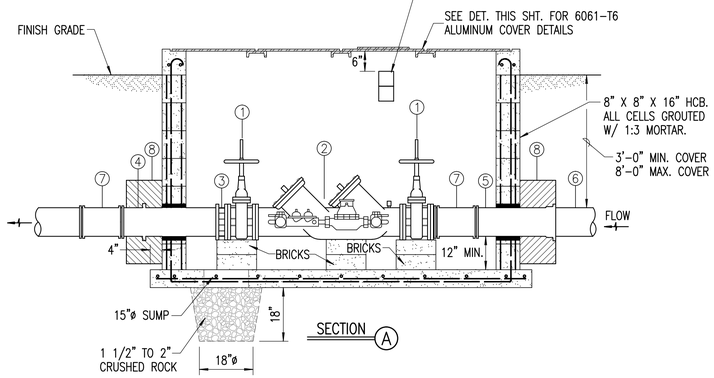

SECTION A

NOTES:

1. MANHOLE MAY BE PRECAST, CAST-IN-PLACE, OR BLOCK.
2. FOR CMU MANHOLE REINFORCEMENT, SEE STANDARD DETAIL MH12.
3. FOR METAL MANHOLE COVER DETAILS, SEE DETAIL THIS SHT.
4. BYPASS METER SHALL BE RADIO READ TYPE MANUFACTURED BY BADGER METER INC., OR OTHER AS REQUIRED BY DEPARTMENT OF WATER SUPPLY.
5. CONCRETE: f'c = 4,000 P.S.I. (MIN.)

DETAIL – 12" DOUBLE CHECK DETECTOR ASSEMBLY (DWS STD. DET. M23R, M44)

NOT TO SCALE

details/water/dbi-detector.dwg

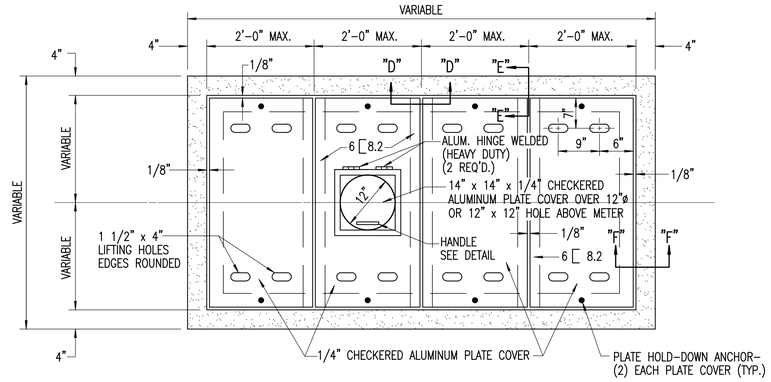

PLAN OF 6061–T6 ALUMINUM MANHOLE COVER

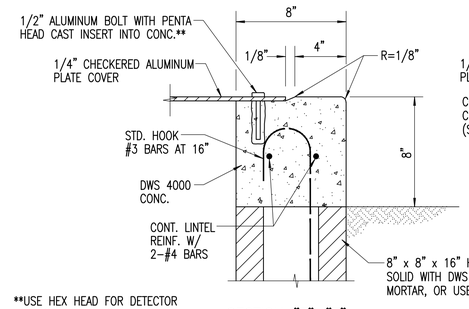

**USE HEX HEAD FOR DETECTOR CHECK MANHOLES

SECTION "F"–"F"

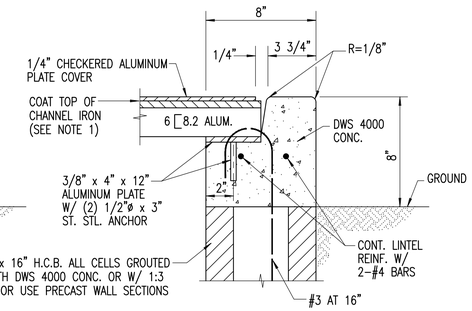

SECTION "E"–"E"

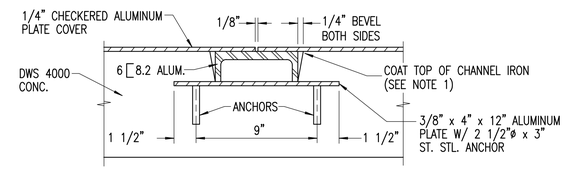

SECTION "D"–"D"

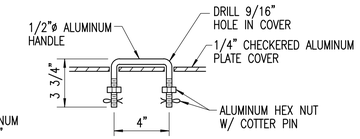

HANDLE DETAIL

NOTES:

1. COAT CONTACT POINTS OF DISSIMILAR METALS WITH CHEVRON INDUSTRIAL MEMBRANE (ELASTOMERIC MEMBRANE) OR APPROVED EQUAL.
2. ALL METAL COMPONENTS OF MANHOLE COVER SHALL BE 6061–T6 ALUMINUM.

METAL MANHOLE COVER (NON–TRAFFIC LOADING)

NOT TO SCALE

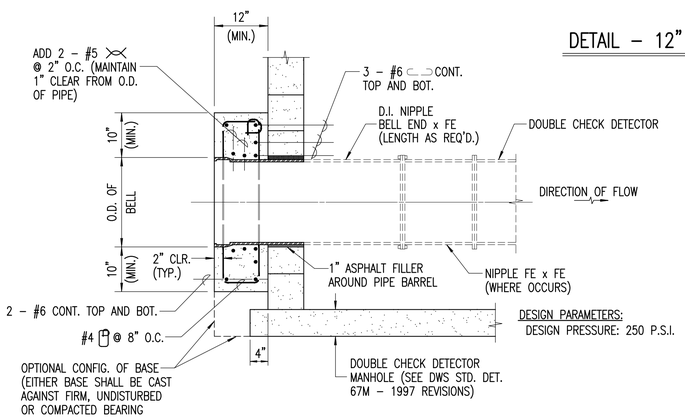

DETAIL – DOUBLE CHECK DETECTOR MANHOLE THRUST BEAM

SCALE: 3/4" = 1'–0"

details/struct/thrstbm0

NOTES:

1. THRUST BEAM TO BE CONSTRUCTED ON BOTH ENDS OF MANHOLE WALL AND OVER THE ENTIRE LENGTH OF THE MANHOLE.
2. CONCTETE: fc' = 4,000 P.S.I. (MIN.)
3. STEEL REINFORCEMENT: ASTM A615 GRADE 60

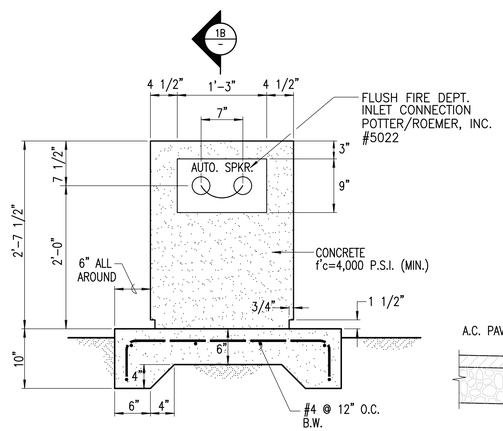

ELEVATION

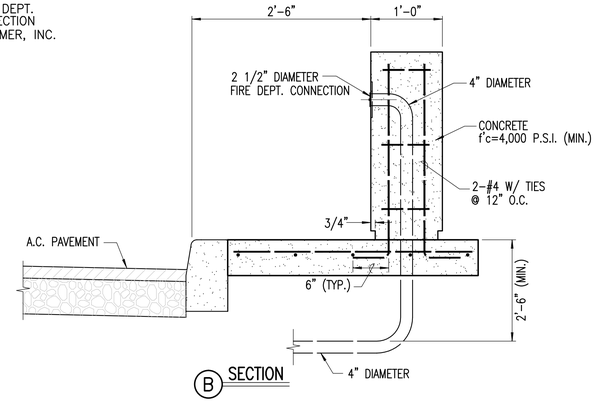

B SECTION

FIRE DEPARTMENT CONNECTION

SCALE: 1" = 1'–0"

REVISION	DESCRIPTION	DATE

CLIFFORD N. MUKAI
LICENSED PROFESSIONAL ENGINEER
NO. 6667–C
HAWAII, U.S.A.

License Expires: April 30, 2010

SIGNATURE DATE

THIS WORK WAS PREPARED BY ME OR UNDER MY SUPERVISION AND CONSTRUCTION OF THIS PROJECT WILL BE UNDER MY OBSERVATION "AS DEFINED IN SECTION 16–115–2 OF THE HAWAII ADMINISTRATIVE RULES FOR PROFESSIONAL ENGINEERS, ARCHITECTS, LAND SURVEYORS AND LANDSCAPE ARCHITECTS"

WARREN S. UNEMORI ENGINEERING, INC.
CIVIL & STRUCTURAL ENGINEERS/LAND SURVEYORS
WELLS STREET PROFESSIONAL CENTER, SUITE 403
2145 WELLS STREET, WAILUKU, MAUI, HAWAII 96793

SOUTH MAUI COMMUNITY PARK RECREATION CENTER

PROJECT NO.: P12 / 012 TAX MAP KEY: (2) 2-2-02 : 42
Waiohuli - Keokea (Kihei), Makawao, Maui, Hawaii

TITLE WATER DETAILS

B.A.W. DESIGNED BY	C.N.M. CHECKED BY	03031.30 JOB NUMBER	C12.02 SHEET
D.P.T. DRAWN BY	C.N.M. APPROVED BY	Nov. 1, 2016 DATE	OF SHEETS
AS NOTED SCALE			

I:\Projects\03proj\03031.30 – South Maui Comm Park – Gymnasium (ADC)\dwg\compliance\det-water-00.dwg

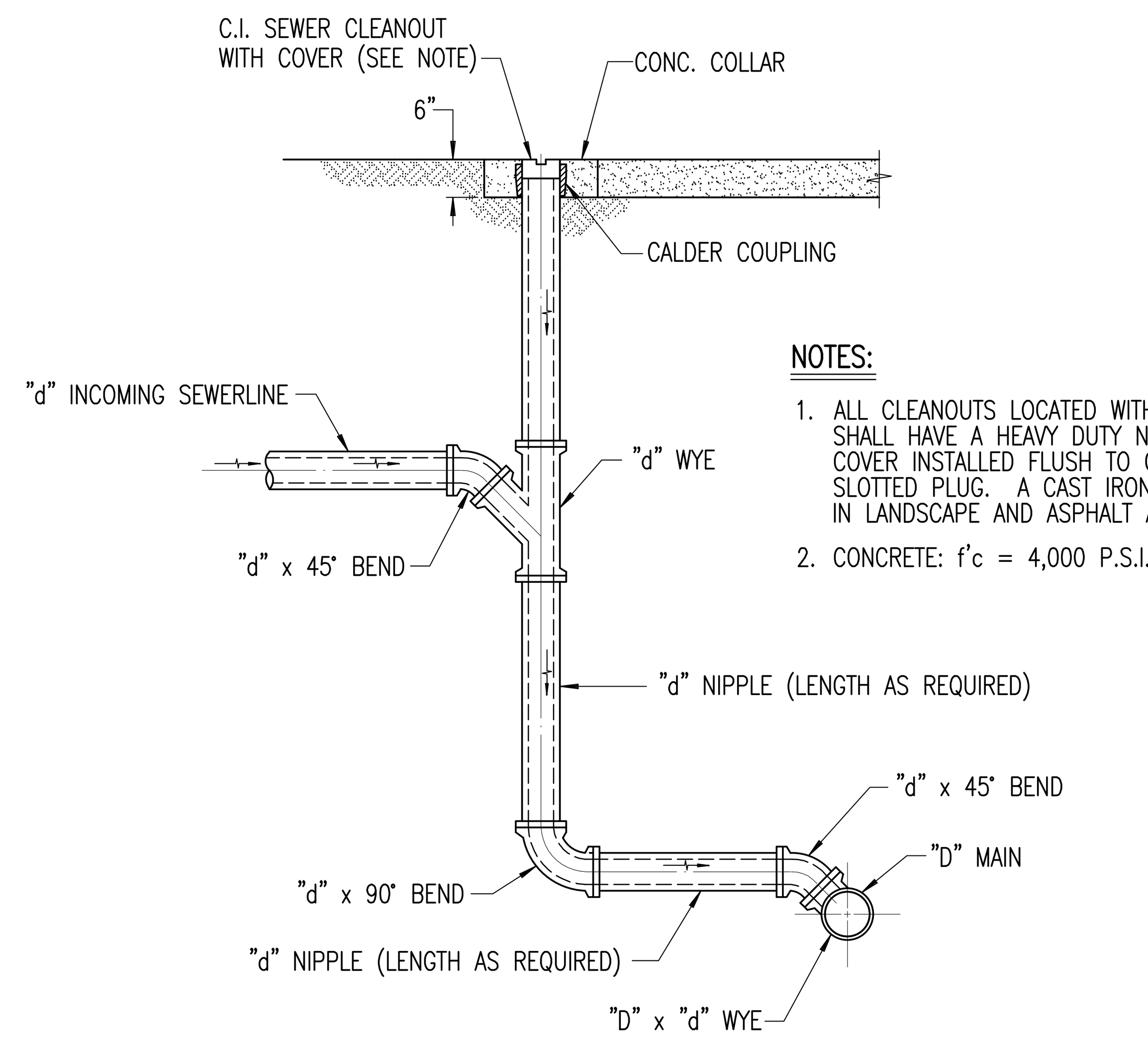

NOTES:

1. ALL CLEANOUTS LOCATED WITHIN CONCRETE SIDEWALK SHALL HAVE A HEAVY DUTY NICKEL BRONZE RIM & COVER INSTALLED FLUSH TO GRADE, WITH DEPRESSED SLOTTED PLUG. A CAST IRON COVER SHALL BE USED IN LANDSCAPE AND ASPHALT AREAS.
2. CONCRETE: f'c = 4,000 P.S.I. (MIN.)

DETAIL – SEWER CLEANOUT TO GRADE DROP CONNECTION

SCALE: 1/2" = 1'-0"

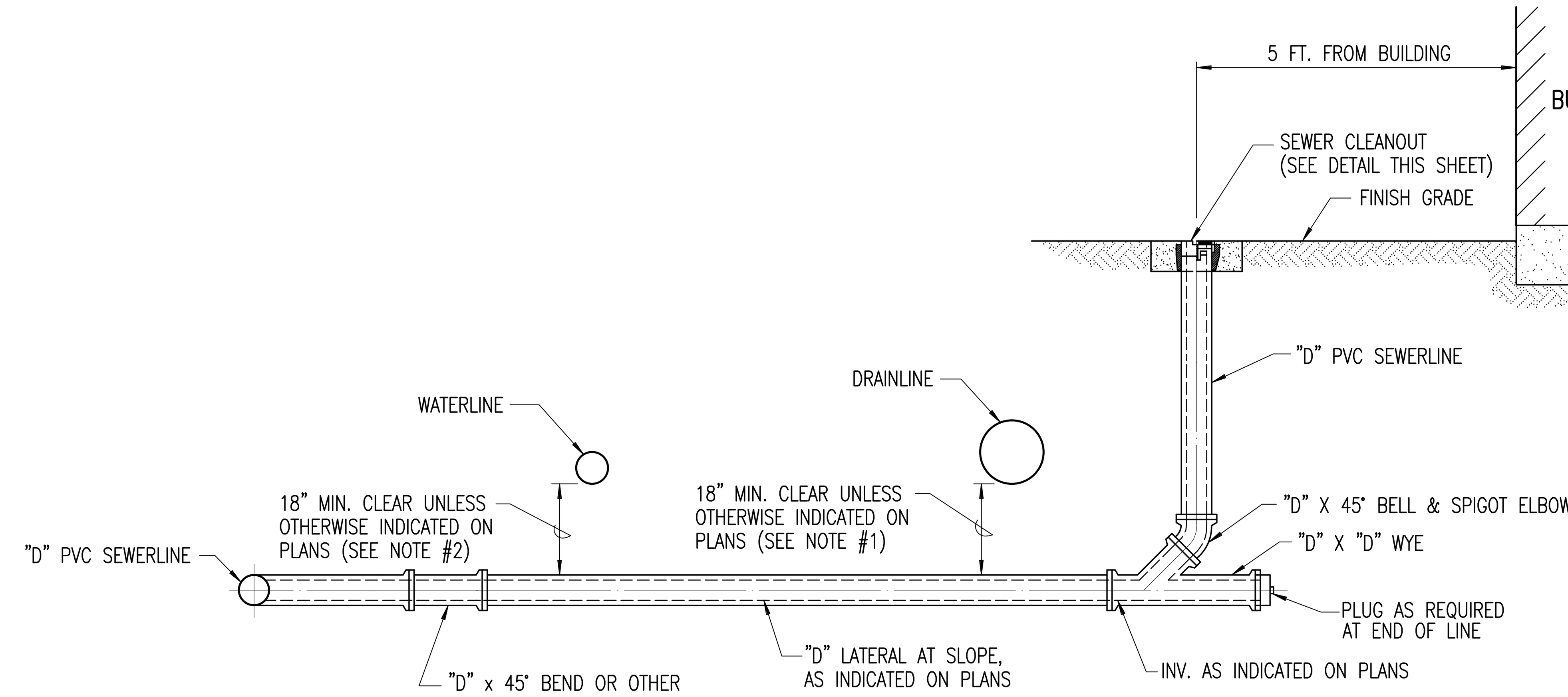

TYPICAL SEWER LATERAL DETAIL

SCALE: 1/2" = 1'-0"

NOTES:

1. FOR ALL DRAINLINE AND SEWER LATERAL CROSSINGS, THE CONTRACTOR SHALL PROVIDE:
   A. REINFORCED CONCRETE JACKET ON SEWER LATERAL FOR VERTICAL CLEARANCE LESS THAN 1'-0"
   B. CONCRETE JACKET ON SEWER LATERAL FOR VERTICAL CLEARANCE GREATER THAN 1'-0" BUT LESS THAN 2'-0"

   BOTH TYPES OF CONCRETE JACKET SHALL BE 5'-0" LONG IF DRAINLINE IS 24" OR SMALLER AND I.D. + 5'-0" LONG IF DRAINLINE IS GREATER THAN 24".
2. FOR ALL WATERLINE AND SEWER LATERAL CROSSINGS THE CONTRACTOR SHALL PROVIDE A 10'-0" LONG REINFORCED CONCRETE JACKET ON THE SEWER LATERAL FOR VERTICAL CLEARANCE LESS THAN 18". PROVIDE 6" MIN. CLEARANCE BETWEEN JACKET AND WATERLINE.
3. CONTRACTOR SHALL VERIFY CROSSINGS WITH UTILITY MAINS PRIOR TO INSTALLATION OF LATERALS.

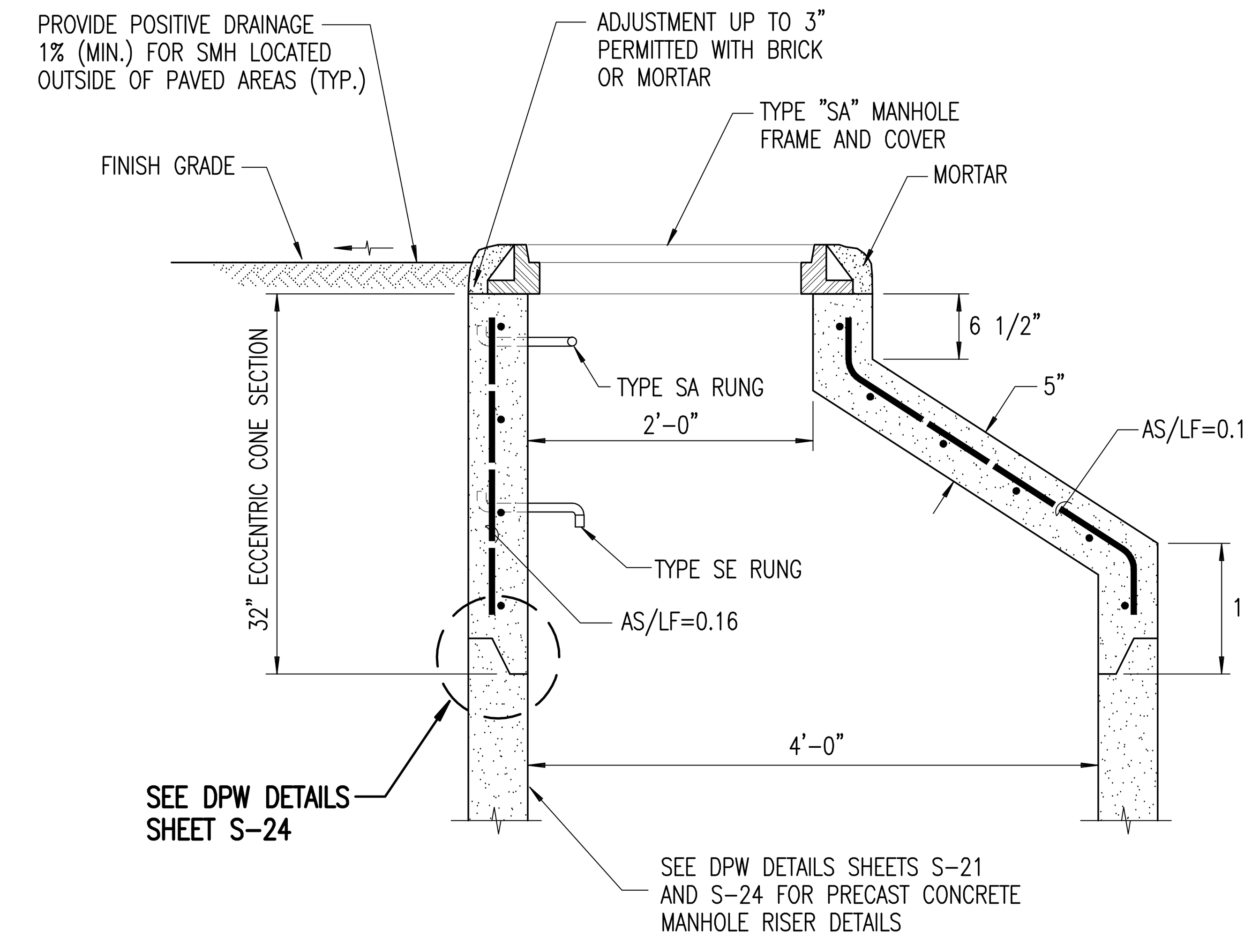

PRE-CAST CONC. ECCENTRIC SEWER MANHOLE CONE

SCALE: 1" = 1'-0"

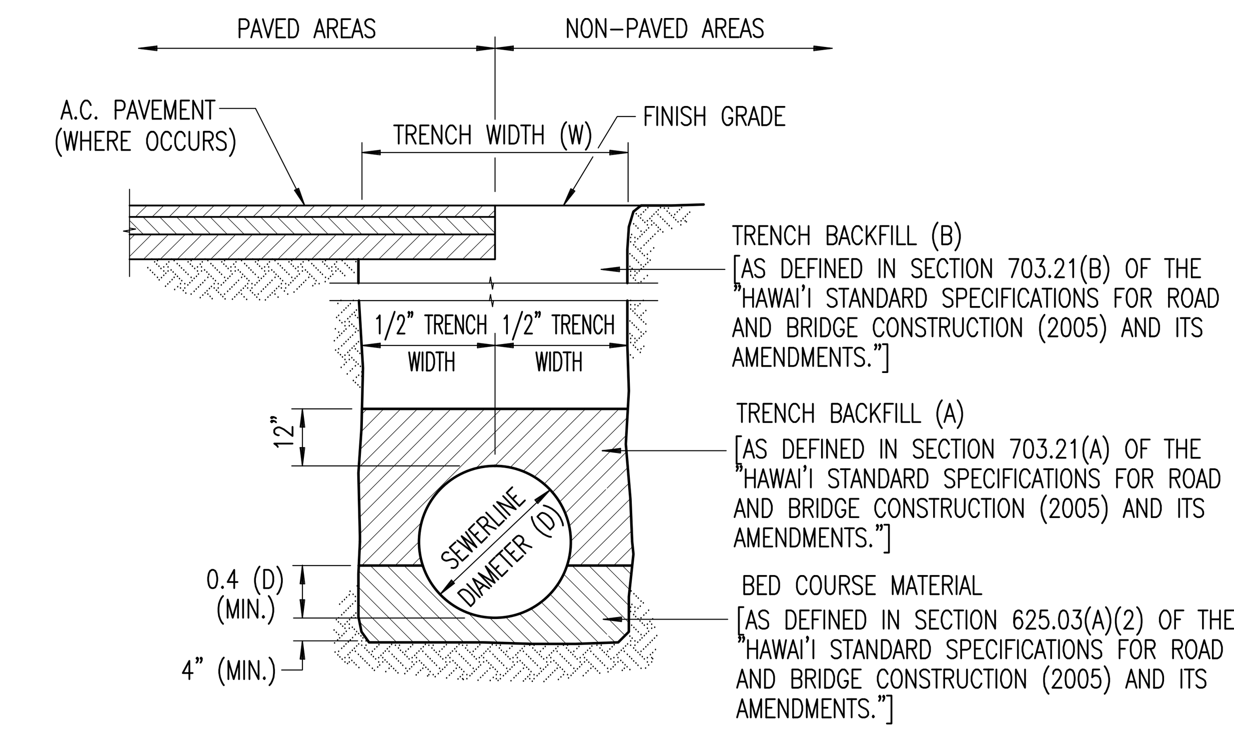

NOTES:

1. TRENCH BACKFILL AND BED COURSE MATERIAL SHALL CONFORM TO SECTION 703, "AGGREGATES" OF THE "HAWAI'I STANDARD SPECIFICATIONS FOR ROAD AND BRIDGE CONSTRUCTION (2005) AND ITS AMENDMENTS."
2. INSTALLATION OF SEWERLINES SHALL CONFORM TO SECTION 625, "SEWER SYSTEM" OF THE "HAWAI'I STANDARD SPECIFICATIONS FOR ROAD AND BRIDGE CONSTRUCTION (2005) AND ITS AMENDMENTS."
3. TRENCH WIDTHS SHALL CONFORM TO TABLE 625.03-1 OF THE "HAWAI'I STANDARD SPECIFICATIONS FOR ROAD AND BRIDGE CONSTRUCTION (2005) AND ITS AMENDMENTS."
4. LOADS IMPOSED BY CONSTRUCTION VEHICLES WITH AXLE LOADS IN EXCESS OF THE AASHTO HS-20-44 VEHICLE (32,000 LBS./AXLE) SHOULD BE MINIMIZED BY DESIGNATED CONSTRUCTION VEHICLE CROSSINGS. ADDITIONAL FILL SHOULD BE PLACED OVER THE SEWERLINES AT THE DESIGNATED CONSTRUCTION VEHICLE CROSSINGS IN STRICT ACCORDANCE WITH THE MANUFACTURER'S RECOMMENDATIONS, OR STRUTTING TO SUPPORT THE PIPE SHOULD BE PLACED IN ACCORDANCE WITH THE CURRENT "HAWAI'I STANDARD SPECIFICATIONS FOR ROAD AND BRIDGE CONSTRUCTION (2005) AND ITS AMENDMENTS." ALL SEWERLINES DAMAGED BY CONSTRUCTION VEHICLE LOADING SHALL BE REPLACED AT THE CONTRACTOR'S SOLE EXPENSE.

TYPICAL TRENCH SECTION PVC SEWERLINE

NOT TO SCALE

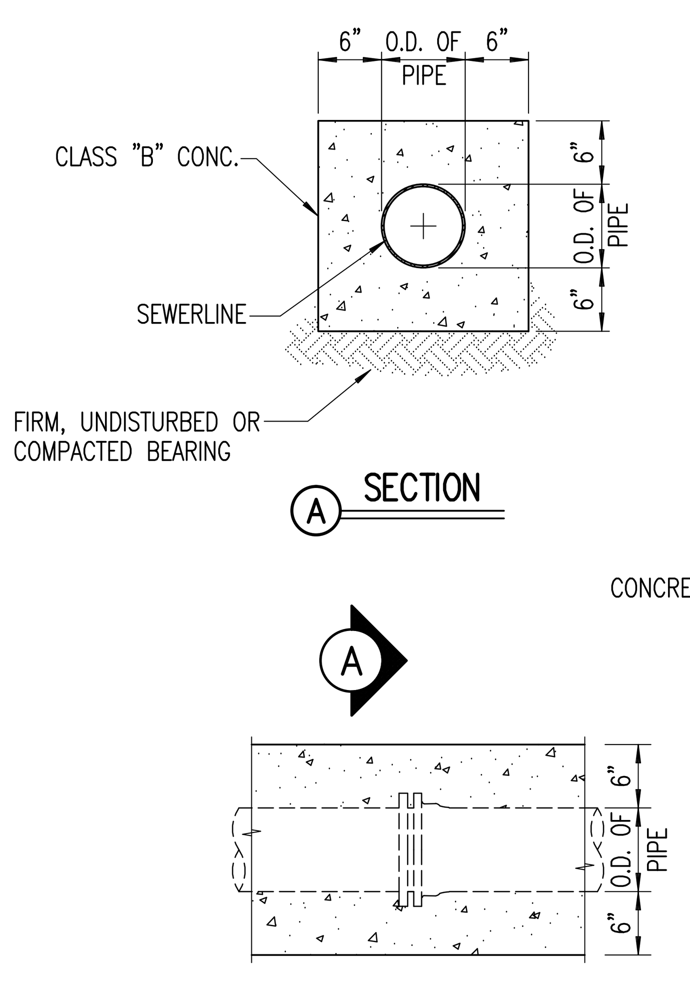

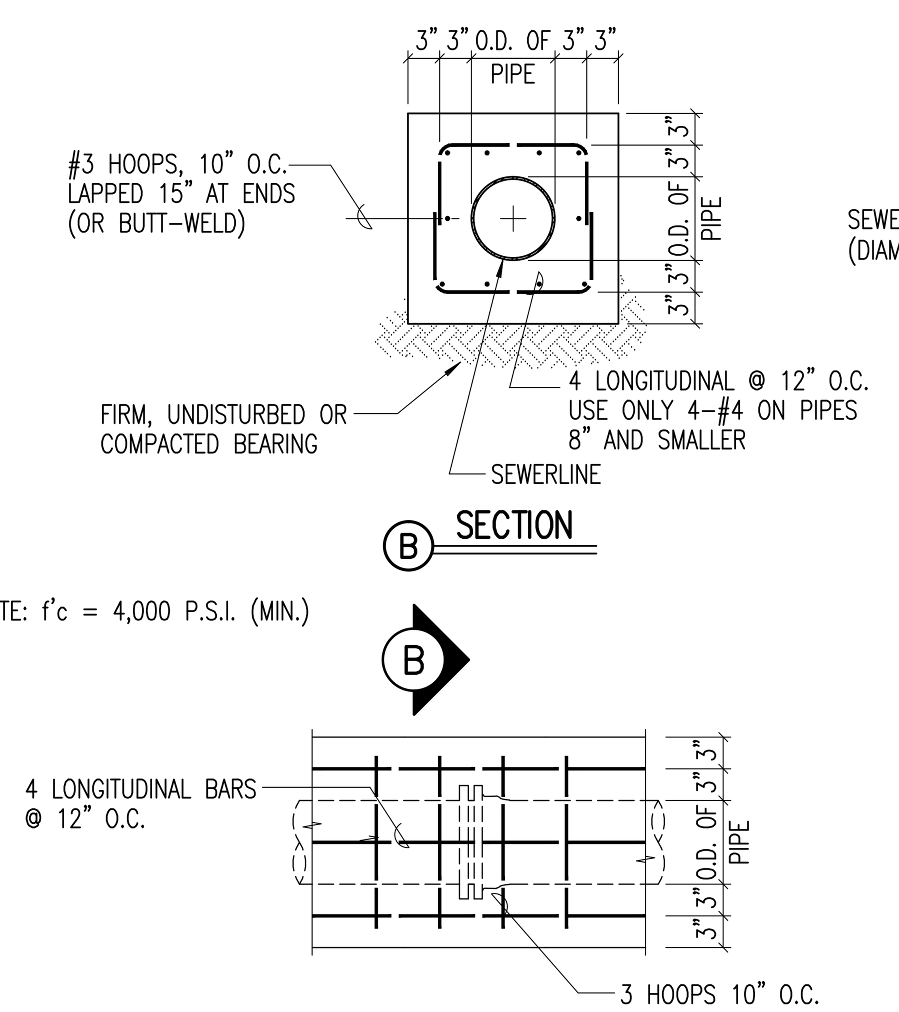

CONCRETE: f'c = 4,000 P.S.I. (MIN.)

DETAIL – PLAIN CONCRETE SEWERLINE JACKET

NOT TO SCALE

DETAIL – REINFORCED CONCRETE SEWERLINE JACKET

NOT TO SCALE

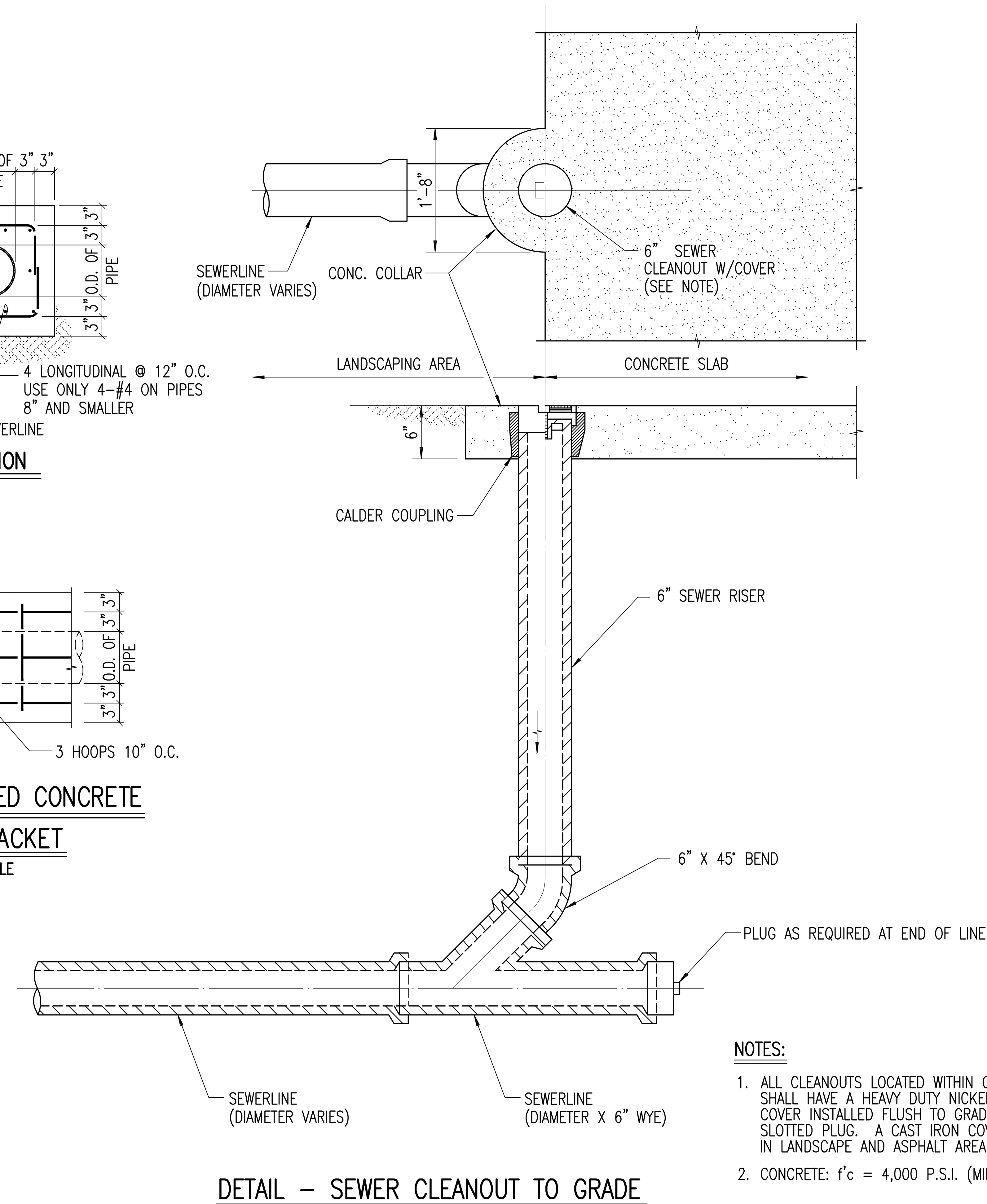

NOTES:

1. ALL CLEANOUTS LOCATED WITHIN CONCRETE SIDEWALK SHALL HAVE A HEAVY DUTY NICKEL BRONZE RIM & COVER INSTALLED FLUSH TO GRADE, WITH DEPRESSED SLOTTED PLUG. A CAST IRON COVER SHALL BE USED IN LANDSCAPE AND ASPHALT AREAS.
2. CONCRETE: f'c = 4,000 P.S.I. (MIN.)

DETAIL – SEWER CLEANOUT TO GRADE

NOT TO SCALE

THE FOLLOWING DETAILS AS SHOWN ON "STANDARD DETAILS FOR PUBLIC WORKS CONSTRUCTION, STATE OF HAWAII", ARE SPECIFICALLY REFERENCED WITHIN THESE PLANS AND SHALL BE CONSIDERED PART OF THE CONSTRUCTION DRAWINGS. (THIS SHALL NOT BE CONSIDERED TO RELIEVE CONTRACTOR FROM COMPLYING WITH ALL PERTINENT PARTS OF THE AFOREMENTIONED LIST, STANDARD DETAILS AND STANDARDS.)

PLATE	CONTENTS
S-6	LATERALS
S-7	ADVANCE RISER CONNECTION
S-9	CHIMNEY
S-10	INDEX TO SEWER MANHOLE DETAILS
S-11, S-12	MANHOLE NOTES
S-13	PRE-CAST CONCRETE PLAIN MANHOLE
S-15	PRE-CAST CONCRETE SHALLOW DROP MANHOLE
S-16	PRE-CAST CONCRETE SHALLOW DROP MANHOLE-BUTT JOINT DETAILS
S-17	PRE-CAST CONCRETE DROP MANHOLE
S-22	PRE-CAST CONCRETE ECCENTRIC MANHOLE CONE
S-31	MANHOLE COVER-TYPE SA
S-32	MANHOLE FRAME-TYPE SA
S-47	PVC PIPE-BEDDING REQUIREMENTS
S-48	PVC PIPE-RESILIENT MANHOLE CONNECTION

REVISION	DESCRIPTION	DATE

CLIFFORD N. MUKAI
LICENSED PROFESSIONAL ENGINEER
NO. 6667-C
HAWAII, U.S.A.

License Expires: April 30, 2018

SIGNATURE DATE

THIS WORK WAS PREPARED BY ME OR UNDER MY SUPERVISION AND CONSTRUCTION OF THIS PROJECT WILL BE UNDER MY OBSERVATION "AS DEFINED IN SECTION 16-115-2 OF THE HAWAII ADMINISTRATIVE RULES FOR PROFESSIONAL ENGINEERS, ARCHITECTS, LAND SURVEYORS AND LANDSCAPE ARCHITECTS"

WARREN S. UNEMORI ENGINEERING, INC.
CIVIL & STRUCTURAL ENGINEERS/LAND SURVEYORS
WELLS STREET PROFESSIONAL CENTER, SUITE 403
2145 WELLS STREET, WAILUKU, MAUI, HAWAII 96793

SOUTH MAUI COMMUNITY PARK RECREATION CENTER

PROJECT NO.: P12 / 012 TAX MAP KEY: (2) 2-2-02 : 42
Waiohuli - Keokea (Kihei), Makawao, Maui, Hawaii

TITLE SEWER DETAILS

B.A.W. DESIGNED BY	C.N.M. CHECKED BY	03031.30 JOB NUMBER	C13.01 SHEET
D.P.T. DRAWN BY	C.N.M. APPROVED BY	Nov. 1, 2016 DATE	OF SHEETS
SCALE AS NOTED			

V:\Projects\03pro\03031.30 – South Maui Comm Park – Gymnasium (ADC)\dwg\conplans\det-sew-00.dwg

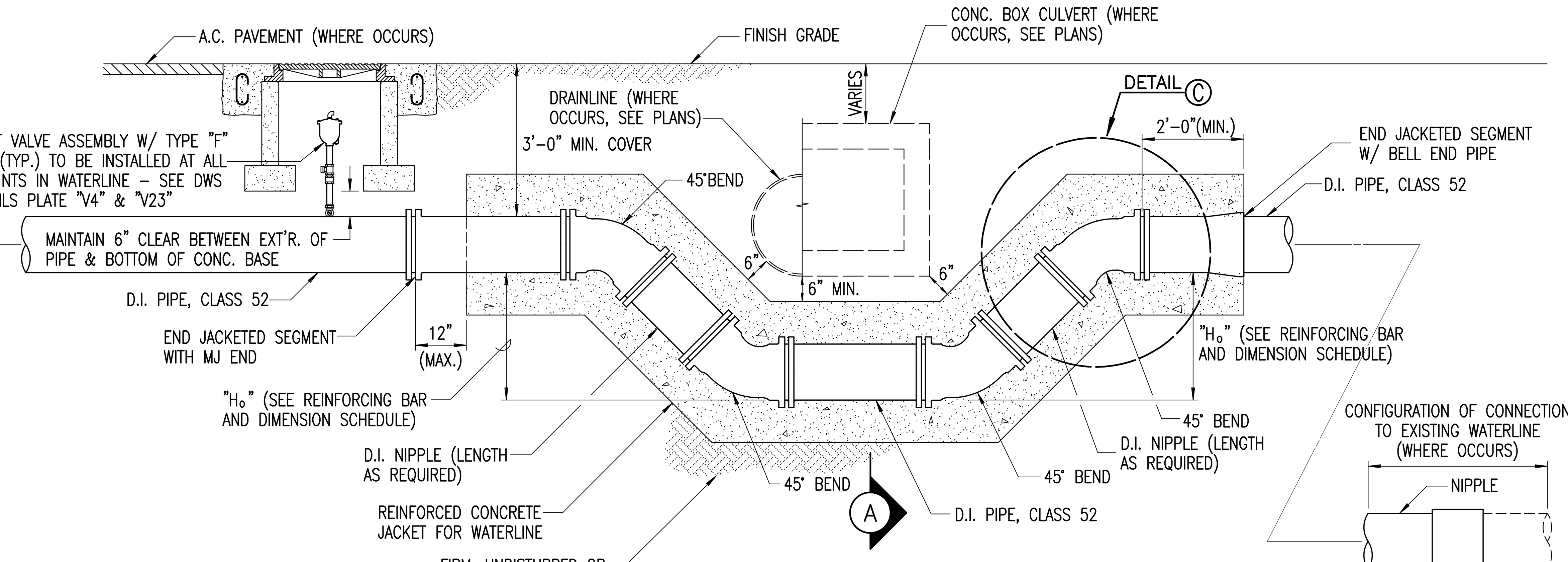

ELEVATION
SCALE: 1/2" = 1'-0"

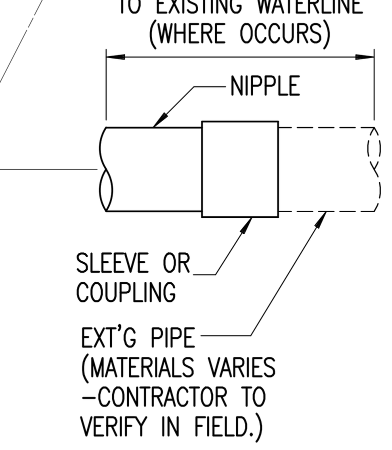

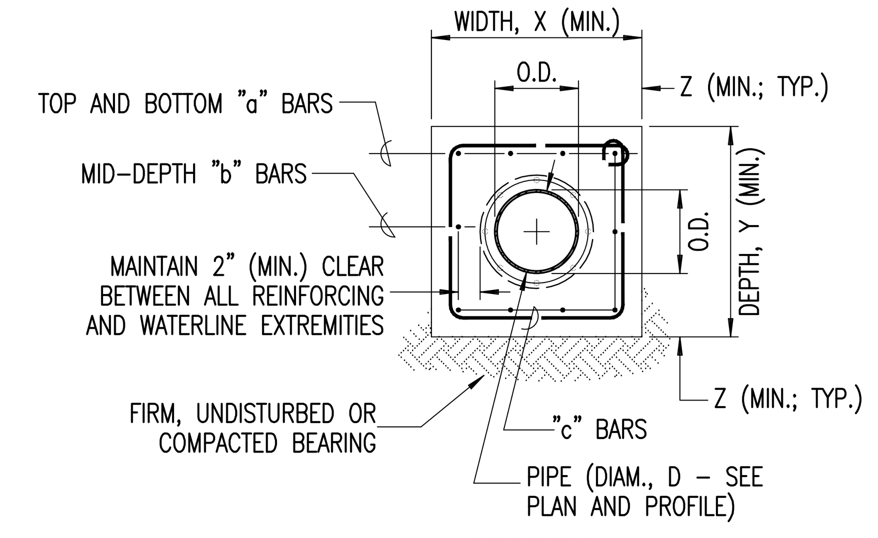

SECTION (A)
SCALE: 1/2" = 1'-0"

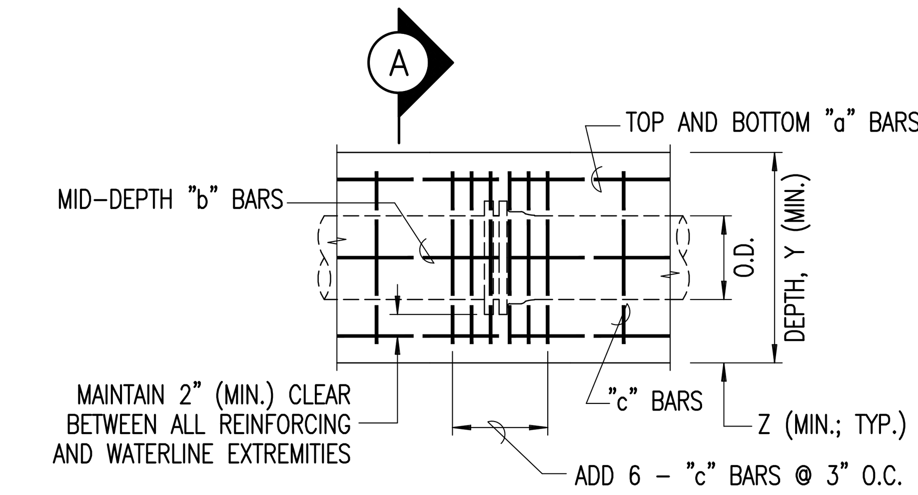

DETAIL - CONCRETE JACKET AT INTERIOR JOINTS (B)
SCALE: 1/2" = 1'-0"

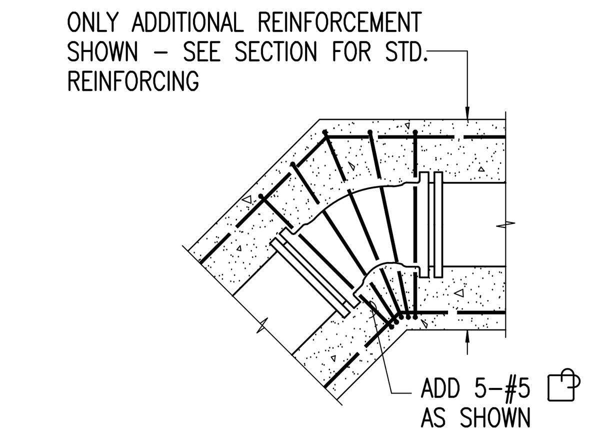

DETAIL - ADDITIONAL REINFORCEMENT AT BENDS (C)
SCALE: 1/2" = 1'-0"

NOTES:

1. CONTRACTOR SHALL CONFIRM LOCATION, DEPTH & TYPE OF ANY EXISTING UTILITIES CROSSINGS PRIOR TO COMMENCEMENT OF OFFSET WORK. IN THE EVENT ANY DISCREPANCIES OCCUR, THE ENGINEER SHALL BE NOTIFIED IMMEDIATELY, OTHERWISE ANY CORRECTIVE WORK REQUIRED SHALL BE PERFORMED SOLELY AT THE CONTRACTORS EXPENSE.
2. FOR CONNECTIONS TO EXISTING A.C. (ASBESTOS-CEMENT) PIPE THE DEPARTMENT OF WATER SUPPLY PROHIBITS CUTTING OF THE A.C. PIPE. CONTRACTOR SHALL REMOVE ONE (1) COMPLETE SECTION OF A.C. PIPE AT EACH CONNECTION TO THE EXISTING A.C. WATERLINE AND REPLACE SAME WITH EQUIVALENT DIAMETER DUCTILE IRON PIPE (CLASS 52).
3. WHEREVER CONSTRUCTION JOINTS ARE REQUIRED 6" RUBBER OR NEOPRENE WATERSTOPS SHALL BE INSTALLED. WATERSTOP SHALL BE OF THE TYPE SPECIFIED AND MANUFACTURED BY THE KIRKHILL COMPANY, OR APPROVED EQUAL.
4. SEE REINFORCING BAR & DIMENSION SCHEDULE FOR REINFORCING AND DIMENSIONS.
5. ALL BURIED JOINTS AND FITTINGS SHALL BE "MJ".

REINFORCING BAR & DIMENSION SCHEDULE

DIAMETER	H_o (MAX.)	X	Y	Z	TOP & BOTTOM "a" BARS	"b" BARS	"c" BARS
10"	4'-0"	2'-6"	2'-6"	10"	2-#7 T&B	2-#7	#5 @ 12" O.C.
10"	5'-0"	2'-6"	2'-6"	10"	4-#6 T&B	2-#6	#5 @ 12" O.C.
10"	6'-0"	2'-6"	2'-6"	10"	4-#6 T&B	2-#6	#5 @ 12" O.C.
10"	7'-0"	2'-10"	2'-10"	1'-0"	4-#6 T&B	2-#6	#5 @ 12" O.C.
10"	8'-0"	2'-10"	2'-10"	1'-0"	2-#6 T&B AND 2-#7 T&B	2-#7	#5 @ 12" O.C.

NOTES:

1. CONCRETE: f'_c = 4,000 P.S.I. (MIN.)
2. STEEL REINFORCEMENT: f_y = 60 K.S.I. (ASTM A615 GRADE 60)
3. HYDRAULIC DESIGN PRESSURE: 65 P.S.I.
4. CONTRACTOR SHALL SUBMIT CERTIFICATION OF COMPLIANCE WITH ABOVE CRITERIA FOR CONCRETE AND STEEL REINFORCEMENT WITHIN TWO (2) WORKING DAYS AFTER FABRICATION OF STRUCTURE.
5. FOR PRE-CAST APPLICATIONS, CONTRACTOR SHALL SUBMIT STRUCTURALLY-STAMPED SHOP DRAWINGS DETAILING LIFTING CONFIGURATION AND INTEGRAL LIFTING HARDWARE AT LEAST TEN (10) WORKING DAYS PRIOR TO FABRICATION OF STRUCTURE.
6. FOR CAST-IN-PLACE APPLICATIONS, WHERE HYDRAULIC PRESSURE IS EXPECTED PRIOR TO AT LEAST FOURTEEN (14) DAYS AFTER PLACEMENT OF CONCRETE, CONTRACTOR SHALL PROVIDE TEMPORARY THRUST RESTRAINTS OR RESTRAINED JOINTS (MEGALUG OR APPROVED EQUAL), AS REQUIRED, AND SHALL SUBMIT STRUCTURALLY-STAMPED SHOP DRAWINGS DETAILING SAME AT LEAST TEN (10) WORKING DAYS PRIOR TO FABRICATION OF STRUCTURE.
7. CONCRETE JACKETING OF A.C. OR P.V.C. PIPE SHALL NOT BE ALLOWED.
8. ALL INTERIOR JOINTS AND FITTINGS SHALL BE "MJ".

DETAIL - REINF. CONC. RECLAIMED WATERLINE JACKET FOR VERTICAL OFFSETS

SCALE: 1/2" = 1'-0"

details/water/jckt0000.dwg

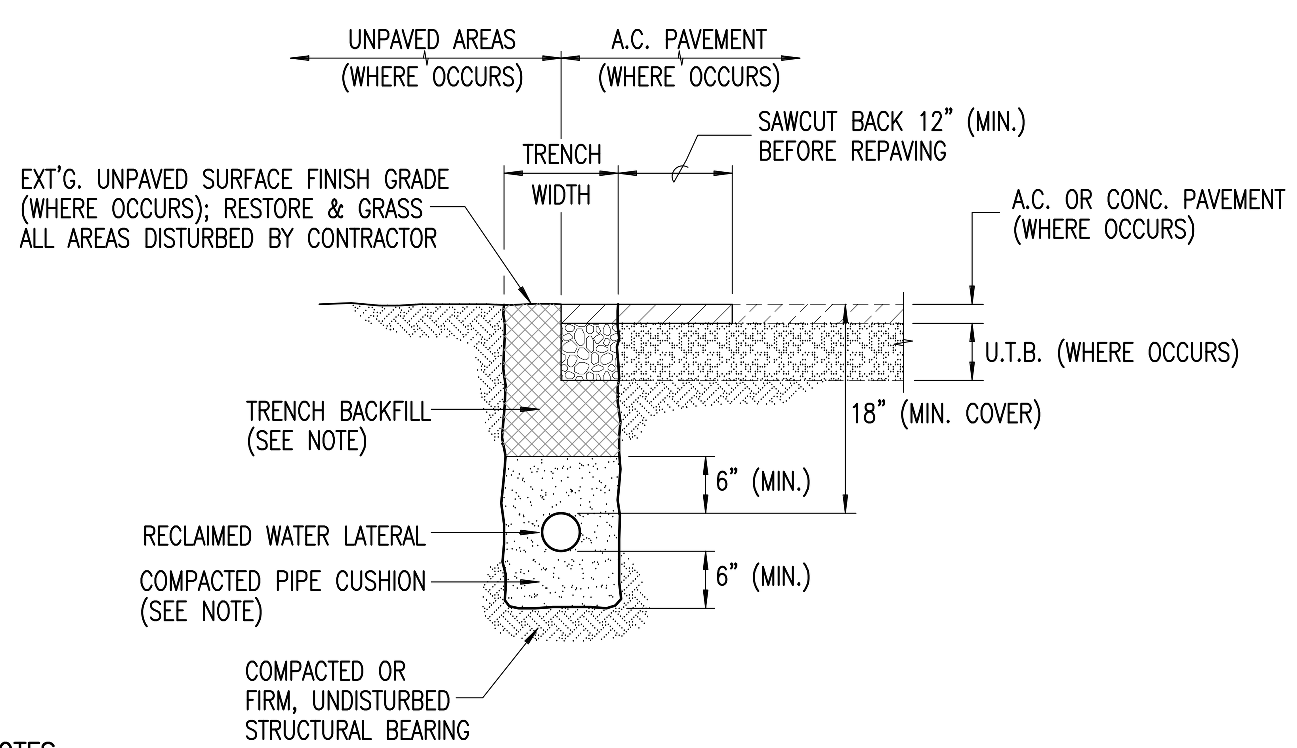

NOTES:

1. TRENCH BACKFILL MATERIAL SHALL CONFORM TO THE REQUIREMENTS OF SECTION 703 - "AGGREGATES" OF "HAWAII STANDARD SPECIFICATIONS FOR ROAD AND BRIDGE CONSTRUCTION (2005)".
2. PIPE CUSHION SHALL CONSIST OF BLACK SAND, MANUFACTURED SAND, CORAL, AND CRUSHER SCREENINGS S4C CONTAINING NO PARTICLES LARGER THAN 1 INCH IN DIAMETER AND SUBJECT TO THE APPROVAL OF THE ENGINEER.

   THE PIPE CUSHION MATERIAL SHALL HAVE A RESISTIVITY OF 5,000 OHM-CENTIMETERS OR GREATER WHEN MEASURED USING THE SOIL BOX METHOD IN ACCORDANCE WITH ASTM G-57.

TYPICAL TRENCH SECTION - RECLAIMED WATER LATERAL

NOT TO SCALE

s:/details/water/trench01.dwg

THE FOLLOWING DETAILS AS SHOWN ON "WATER SYSTEM STANDARDS 2002" ARE SPECIFICALLY REFERENCED WITHIN THESE PLANS AND SHALL BE CONSIDERED PART OF THE CONSTRUCTION DRAWINGS. (THIS SHALL BE CONSTRUED TO RELIEVE CONTRACTOR FROM COMPLING WITH ALL PERTINENT PARTS OF THE AFOREMENTIONED LIST, STANDARD DETAILS AND STANDARDS.)

PLATE	CONTENTS
B2	HORIZONTAL REACTION BLOCK FOR WATER MAINS
B3	HORIZONTAL THRUST BLOCK - MINIMUM BEARING AREAS
B16	CONCRETE THRUST BEAM TYPICAL DETAILS
B17	CONCRETE THRUST BEAM SCHEDULE
M11	METAL MANHOLE COVER
P10	TRENCH BACKFILL
V3	VALVE FRAME AND COVER CAST IRON, 6" SIZE
V9	BACKFLOW PREVENTER TYPICAL INSTALLATION

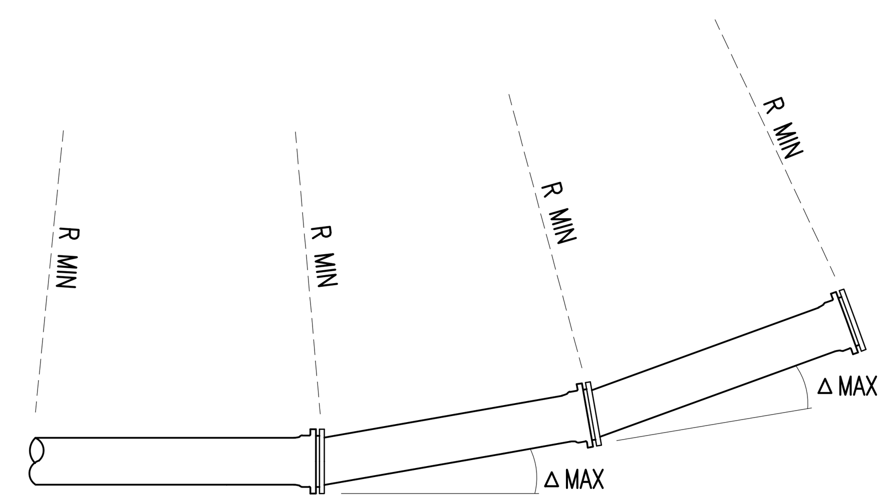

NOTES:

1. CONTRACTOR SHALL LIMIT FULL LENGTH DEFLECTIONS (Δ MAX) FOR PUSH-ON TYPE JOINT & MECHANICAL JOINT PIPES TO 80% OF THE MAXIMUM ALLOWABLE DEFLECTIONS SPECIFIED BY THE MANUFACTURER, OR THE VALUES SPECIFIED AS FOLLOWS, WHICHEVER IS LESS :

SIZE OF PIPE	Δ MAX	O/S PER 18' LENGTH
12" & LESS	4°	15"
14" TO 20"	2°15'	8"
24" TO 48"	1°30'	5"

2. FOR DUCTILE IRON PIPE ONLY.

DETAIL - HORIZ. & VERT. DUCTILE IRON PIPE DEFLECTION

NOT TO SCALE

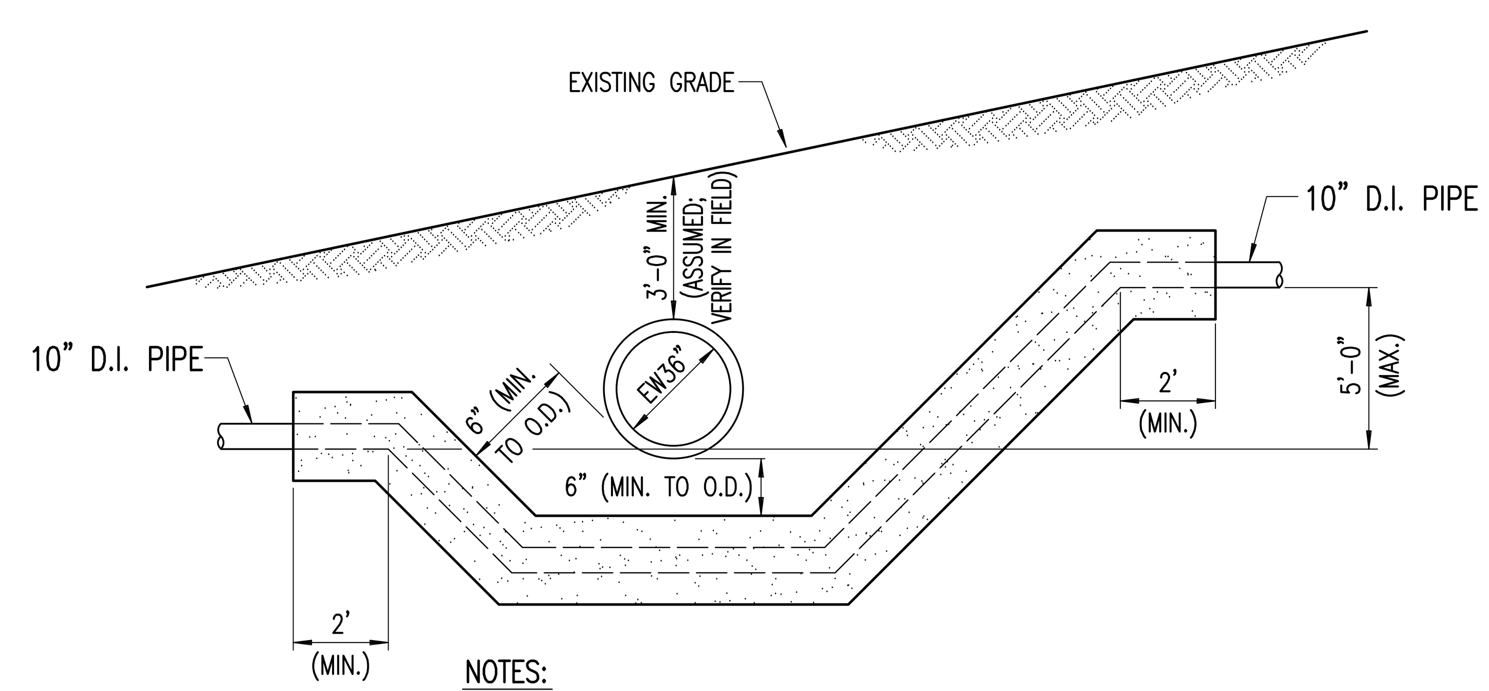

NOTES:

1. SEE DETAIL, THIS SHEET, FOR REINFORCEMENT AND DIMENSIONS.
2. VERIFY ACTUAL LOCATION & INVERTS IN FIELD PRIOR TO CONSTRUCTION.

DETAIL - ASYMMETRIC REINF. CONC. VERT. OFFSET FOR RECLAIMED WATERLINE

NOT TO SCALE

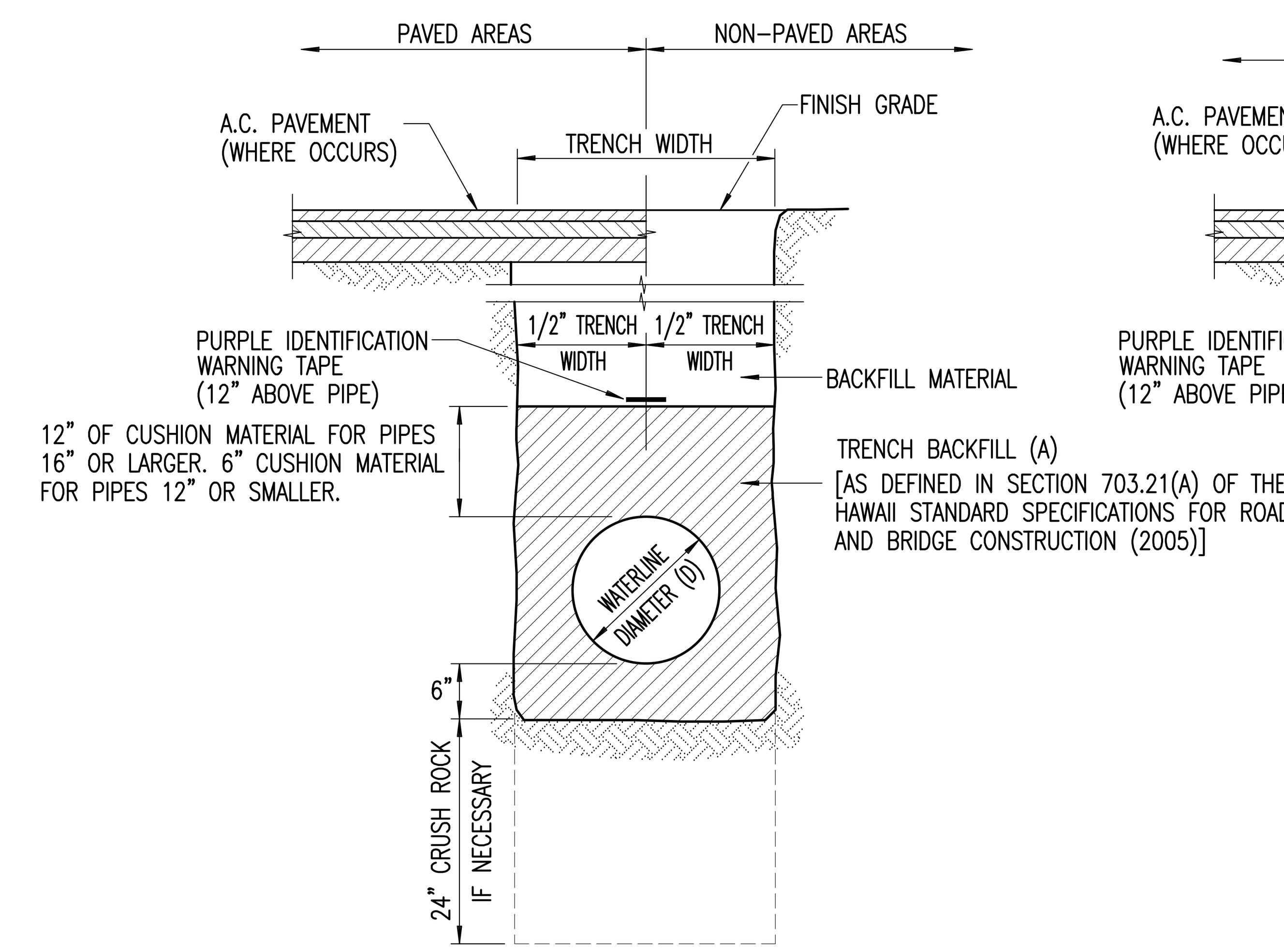

TYPICAL TRENCH SECTION FOR RECLAIMED WATERLINES ABOVE 4 FT. ELEVATION

NOT TO SCALE

NOTES:

1. TRENCH BACKFILL AND BED COURSE MATERIAL SHALL COMFORM TO SECTION 703, "AGGREGATES" OF THE "HAWAII STANDARD SPECIFICATIONS FOR ROAD AND BRIDGE CONSTRUCTION (2005)."
2. INSTALLATION OF WATERLINES SHALL CONFORM TO SECTION 624, "WATER SYSTEM" OF THE "HAWAII STANDARD SPECIFICATIONS FOR ROAD AND BRIDGE CONSTRUCTION (2005)."
3. TRENCH WIDTH SHALL CONFORM TO TABLE 624.03-1 OF SECTION 624.03(B) OF THE "HAWAII STANDARD SPECIFICATIONS FOR ROAD AND BRIDGE CONSTRUCTION (2005)."

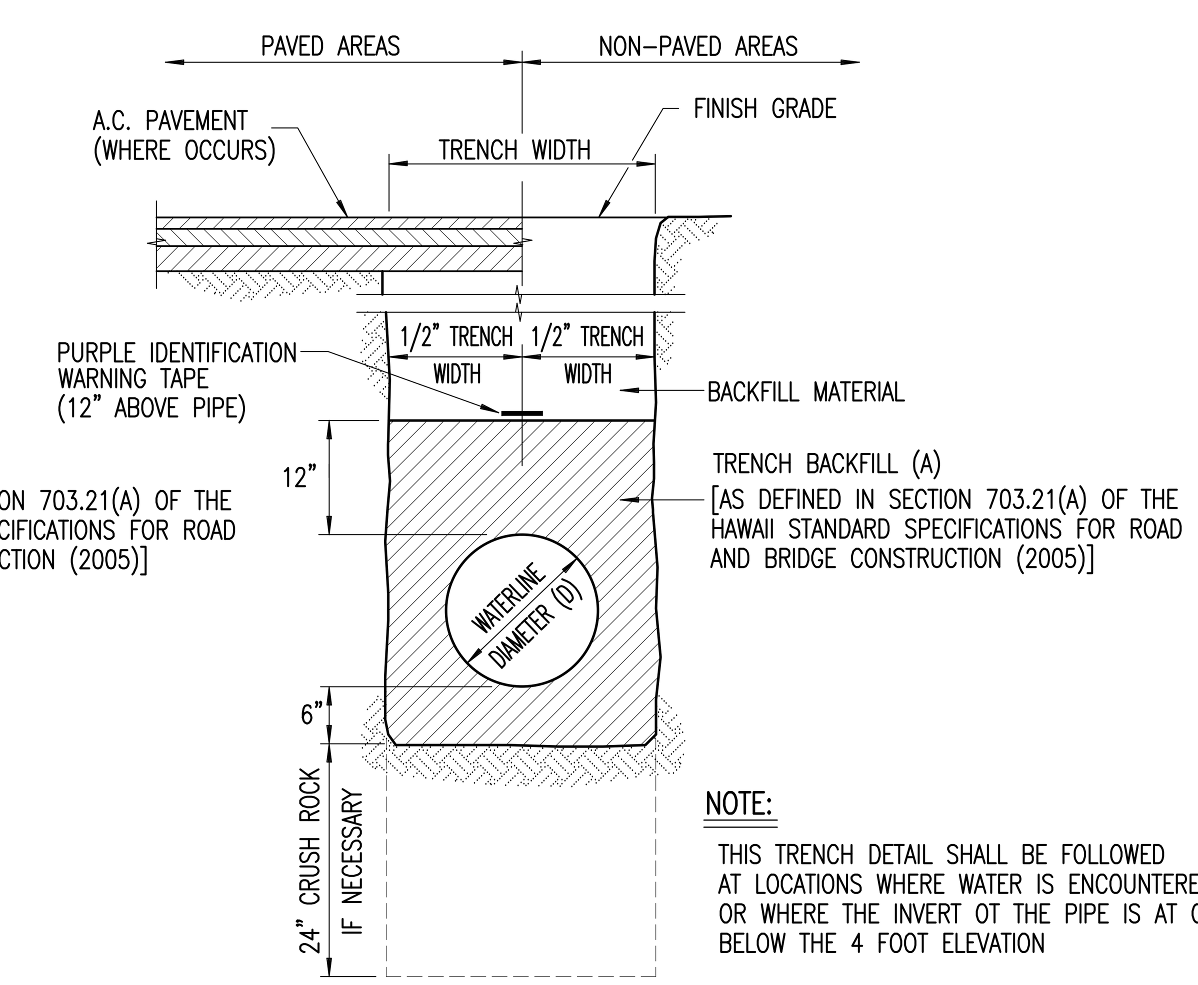

NOTE:

THIS TRENCH DETAIL SHALL BE FOLLOWED AT LOCATIONS WHERE WATER IS ENCOUNTERED OR WHERE THE INVERT OT THE PIPE IS AT OR BELOW THE 4 FOOT ELEVATION

TYPICAL TRENCH SECTION FOR RECLAIMED WATERLINES BELOW 4 FT. ELEVATION

NOT TO SCALE

4. LOADS IMPOSED BY CONSTRUCTION VEHICLES WITH AXLE LOADS IN EXCESS OF THE AASHTO HS-20-44 VEHICLE (32,000 LBS./AXLE) SHOULD BE MINIMIZED BY DESIGNATED CONSTRUCTION VEHICLE CROSSINGS. ADDITIONAL FILL SHOULD BE PLACED OVER THE WATERLINES AT THE DESIGNATED CONSTRUCTION VEHICLE CROSSINGS IN STRICT ACCORDANCE WITH THE MANUFACTURER'S RECOMMENDATIONS, OR STRUTTING TO SUPPORT THE PIPE SHOULD BE PLACED IN ACCORDANCE WITH THE CURRENT "HAWAII STANDARD SPECIFICATIONS FOR ROAD AND BRIDGE CONSTRUCTION (2005)." ALL WATERLINES DAMAGED BY CONSTRUCTION VEHICLE LOADING SHALL BE REPLACED AT THE CONTRACTOR'S EXPENSE.

REVISION	DESCRIPTION	DATE

CLIFFORD N. MUKAI
LICENSED PROFESSIONAL ENGINEER
NO. 6667-C
HAWAII, U.S.A.

License Expires: April 30, 2018

SIGNATURE DATE

THIS WORK WAS PREPARED BY ME OR UNDER MY SUPERVISION AND CONSTRUCTION OF THIS PROJECT WILL BE UNDER MY OBSERVATION "AS DEFINED IN SECTION 16-115-2 OF THE HAWAII ADMINISTRATIVE RULES FOR PROFESSIONAL ENGINEERS, ARCHITECTS, LAND SURVEYORS AND LANDSCAPE ARCHITECTS"

WARREN S. UNEMORI ENGINEERING, INC.
CIVIL & STRUCTURAL ENGINEERS/LAND SURVEYORS
WELLS STREET PROFESSIONAL CENTER, SUITE 403
2145 WELLS STREET, WAILUKU, MAUI, HAWAII 96793

SOUTH MAUI COMMUNITY PARK RECREATION CENTER

PROJECT NO.: P12 / 012 TAX MAP KEY: (2) 2-2-02 : 42
Waiohuli - Keokea (Kihei), Makawao, Maui, Hawaii

TITLE RECLAIMED WATER (R1) DETAILS

B.A.W. DESIGNED BY	C.N.M. CHECKED BY	03031.30 JOB NUMBER	C14.01 SHEET
D.P.T. DRAWN BY	C.N.M. APPROVED BY	Nov. 1, 2016 DATE	OF SHEETS
SCALE AS NOTED			

V:\Projdata\03proj\03031.30 - South Maui Comm Park - Gymnasium (ADC)\dwg\conplans\det-reclaim-wtr-00.dwg

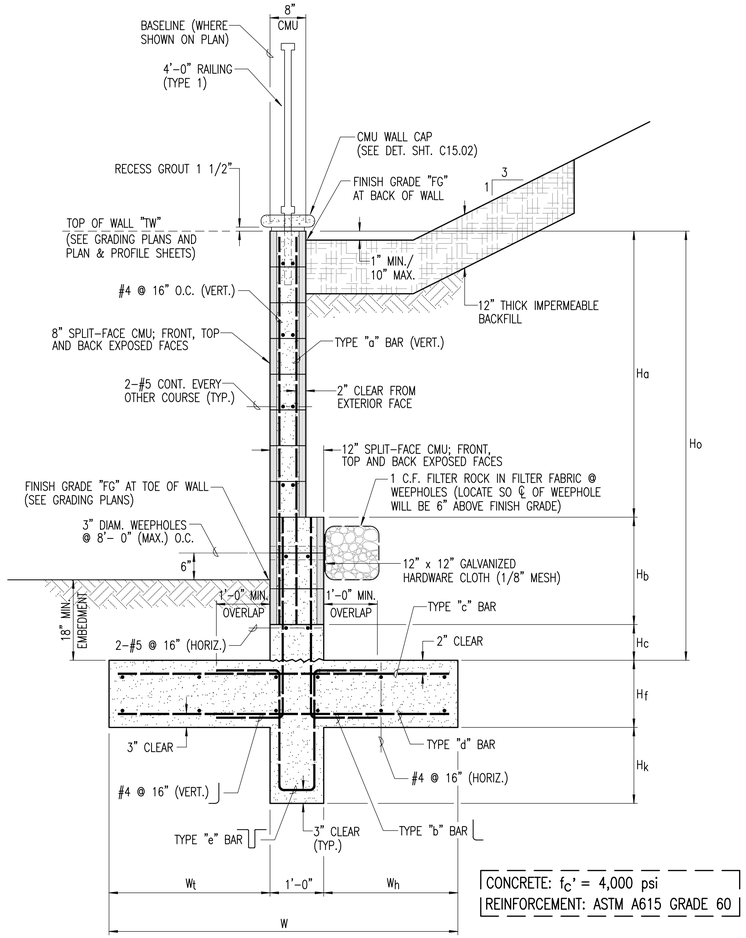

CONCRETE: f_c' = 4,000 psi
REINFORCEMENT: ASTM A615 GRADE 60

TYPE "A" CMU RETAINING WALL

SCALE: 3/4" = 1'-0"

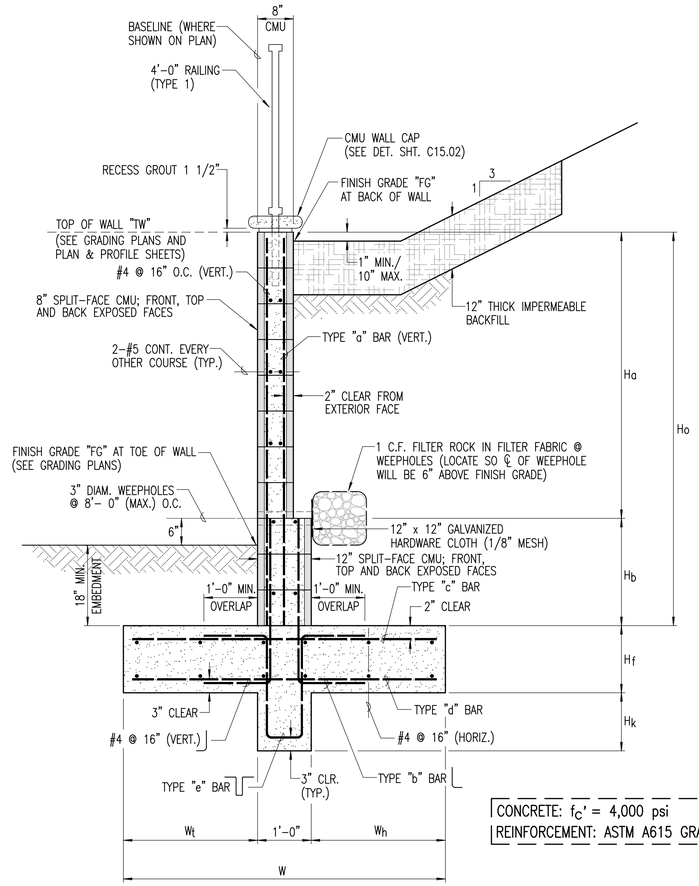

CONCRETE: f_c' = 4,000 psi
REINFORCEMENT: ASTM A615 GRADE 60

TYPE "B" CMU RETAINING WALL

SCALE: 3/4" = 1'-0"

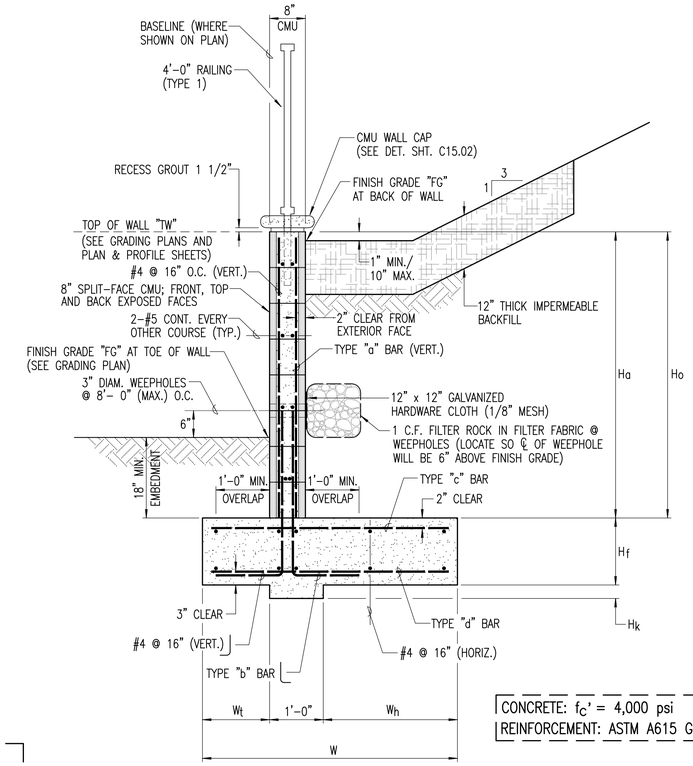

CONCRETE: f_c' = 4,000 psi
REINFORCEMENT: ASTM A615 GRADE 60

TYPE "C" CMU RETAINING WALL

SCALE: 3/4" = 1'-0"

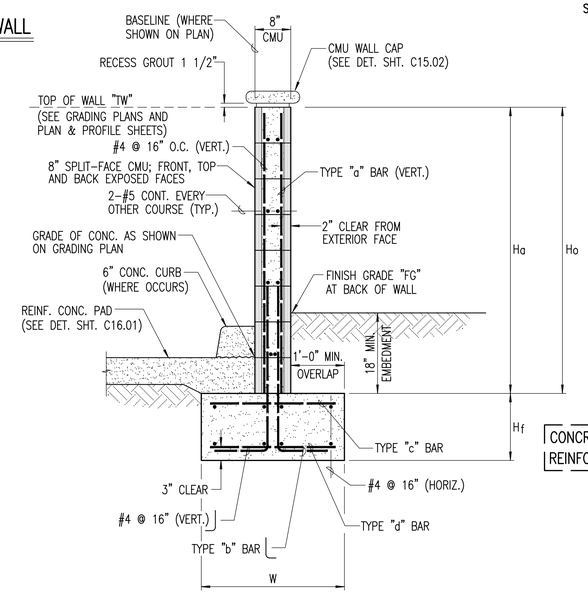

CONCRETE: f_c' = 4,000 psi
REINFORCEMENT: ASTM A615 GRADE 60

TYPE "TE" CMU WALL

SCALE: 3/4" = 1'-0"

NOTES:

1. FILTER FABRIC:

   FILTER FABRIC SHALL BE MANUFACTURED FROM POLYESTER, NYLON OR POLYPROPYLENE MATERIAL, OR ANY COMBINATION THEREOF AND SHALL POSSESS AN EQUIVALENT OPENING SIZE (EOS) COMPATIBLE WITH THE ADJACENT MATERIAL. FILTER FABRIC SHALL BE MIRAFI 140N DRAINAGE FABRIC, MANUFACTURED BY MIRAFI, INC., OR APPROVED EQUAL. SHOP DRAWINGS SHALL BE SUBMITTED FOR APPROVAL BY THE ENGINEER.

2. FILTER ROCK:

   FILTER ROCK SHALL BE ASTM C-33 NO. 67 AGGREGATE AND SHALL CONFORM TO SECTION 703.16, OF THE "HAWAII STANDARD SPECIFICATIONS FOR ROAD AND BRIDGE CONSTRUCTION (2005)" AND ITS AMENDMENTS.

TYPE	Total Height, H_o (up to)	Retained Height, H, (up to)	H_a	H_b	H_c	H_f	H_k	W_t	W_h	W	Courses of 12" Block	"a" BARS	"b" BARS	"c" BARS	"d" BARS	"e" BARS
A-1	8' - 8"	8' - 8"	5' - 4"	2' - 0"	1' - 4"	1' - 3"	1' - 9"	3' - 6"	2' - 6"	7' - 0"	3	#4 @ 8"	#4 @ 8"	#4 @ 8"	#5 @ 8"	#4 @ 8"
A-2	8' - 0"	8' - 0"	5' - 4"	2' - 0"	8"	1' - 3"	1' - 5"	3' - 0"	2' - 6"	6' - 6"	3	#4 @ 8"	#4 @ 8"	#4 @ 8"	#5 @ 8"	#4 @ 8"
B-1	7' - 4"	7' - 4"	5' - 4"	2' - 0"	N/A	1' - 3"	1' - 1"	2' - 6"	2' - 6"	6' - 0"	3	#4 @ 8"	#4 @ 8"	#4 @ 8"	#5 @ 8"	#4 @ 8"
B-2	6' - 8"	6' - 8"	4' - 8"	2' - 0"	N/A	1' - 3"	9"	2' - 0"	2' - 6"	5' - 6"	3	#4 @ 16"	#4 @ 8"	#4 @ 8"	#4 @ 8"	N/A
B-3	6' - 0"	6' - 0"	4' - 0"	2' - 0"	N/A	1' - 3"	6"	1' - 6"	2' - 6"	5' - 0"	3	#4 @ 16"	#4 @ 8"	#4 @ 16"	#4 @ 16"	N/A
C-1	5' - 4"	5' - 4"	5' - 4"	N/A	N/A	1' - 3"	3"	1' - 3"	2' - 6"	4' - 9"	N/A	#4 @ 16"	#4 @ 8"	#4 @ 16"	#4 @ 16"	N/A
C-2	4' - 8"	4' - 8"	4' - 8"	N/A	N/A	1' - 3"	N/A	9"	2' - 6"	4' - 3"	N/A	#4 @ 16"	#4 @ 8"	#4 @ 16"	#4 @ 16"	N/A
C-3	4' - 0"	4' - 0"	4' - 0"	N/A	N/A	1' - 3"	N/A	9"	2' - 0"	3' - 9"	N/A	#4 @ 16"	#4 @ 16"	#4 @ 16"	#4 @ 16"	N/A
C-4	3' - 4"	3' - 4"	3' - 4"	N/A	N/A	1' - 3"	N/A	9"	1' - 6"	3' - 3"	N/A	#4 @ 16"	#4 @ 16"	#4 @ 16"	#4 @ 16"	N/A
C-5	2' - 8"	2' - 8"	2' - 8"	N/A	N/A	1' - 3"	N/A	9"	1' - 0"	2' - 9"	N/A	#4 @ 16"	#4 @ 16"	#4 @ 16"	#4 @ 16"	N/A
TE	8' - 8"	N/A	8' - 8"	N/A	N/A	1' - 3"	N/A	N/A	N/A	2' - 8"	N/A	#4 @ 16"	#4 @ 16"	#4 @ 16"	#4 @ 16"	N/A

REVISION	DESCRIPTION	DATE

ALAN L. UNEMORI
LICENSED PROFESSIONAL ENGINEER
NO. 9354-S
HAWAII, U.S.A.

License Expires: April 30, 2018

SIGNATURE DATE

THIS WORK WAS PREPARED BY ME OR UNDER MY SUPERVISION AND CONSTRUCTION OF THIS PROJECT WILL BE UNDER MY OBSERVATION "AS DEFINED IN SECTION 16-115-2 OF THE HAWAII ADMINISTRATIVE RULES FOR PROFESSIONAL ENGINEERS, ARCHITECTS, LAND SURVEYORS AND LANDSCAPE ARCHITECTS"

WARREN S. UNEMORI ENGINEERING, INC.
CIVIL & STRUCTURAL ENGINEERS/LAND SURVEYORS
WELLS STREET PROFESSIONAL CENTER, SUITE 403
2145 WELLS STREET, WAILUKU, MAUI, HAWAII 96793

SOUTH MAUI COMMUNITY PARK RECREATION CENTER

PROJECT NO.: P12 / 012 TAX MAP KEY: (2) 2-2-02 : 42
Waiohuli - Keokea (Kihei), Makawao, Maui, Hawaii

TITLE SITE STRUCTURES DETAILS AND NOTES

B.A.W. DESIGNED BY	C.N.M. CHECKED BY	03031.30 JOB NUMBER	C15.01 SHEET
D.P.T. DRAWN BY	A.L.U. APPROVED BY	Nov. 1, 2016 DATE	OF SHEETS
SCALE AS NOTED			

11-01-2016 (BID SET)

K:\Projects\03proj\03031.30 - South Maui Comm Park - Gymnasium (ADC)\dwg\concptsks\det-wall-02.dwg

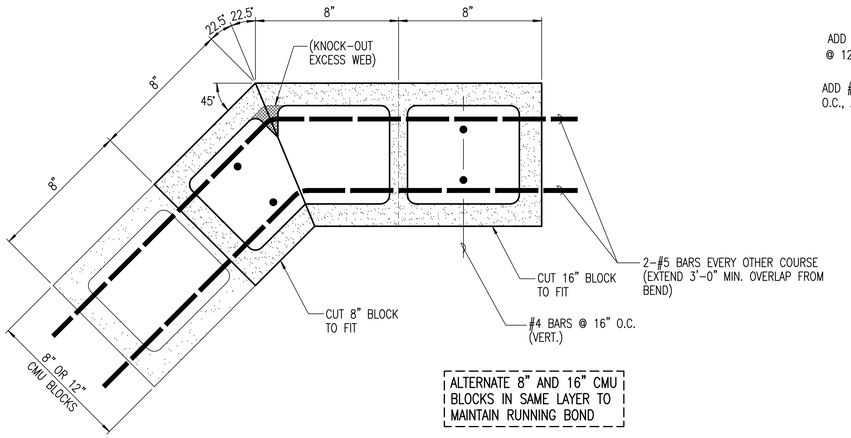

ALTERNATE 8" AND 16" CMU BLOCKS IN SAME LAYER TO MAINTAIN RUNNING BOND

1 DETAIL – 45 DEGREE CORNERS IN 8" OR 12" CMU RETAINING WALL

SCALE: 4" = 1'-0"

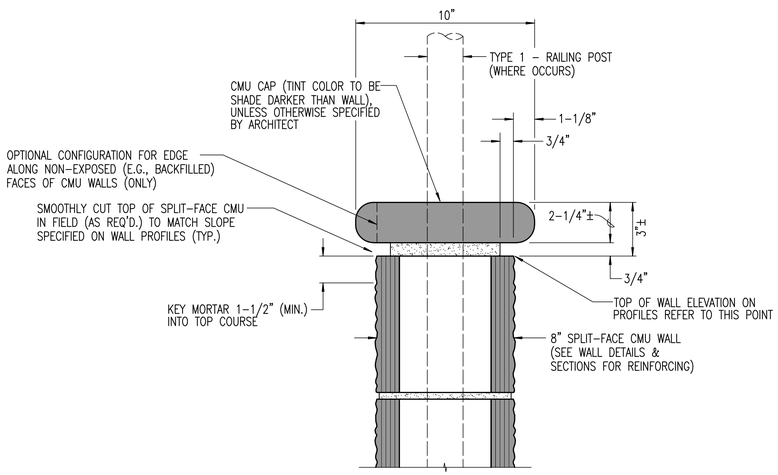

2 ELEVATION – CMU WALL CAP

SCALE: 3" = 1'-0"

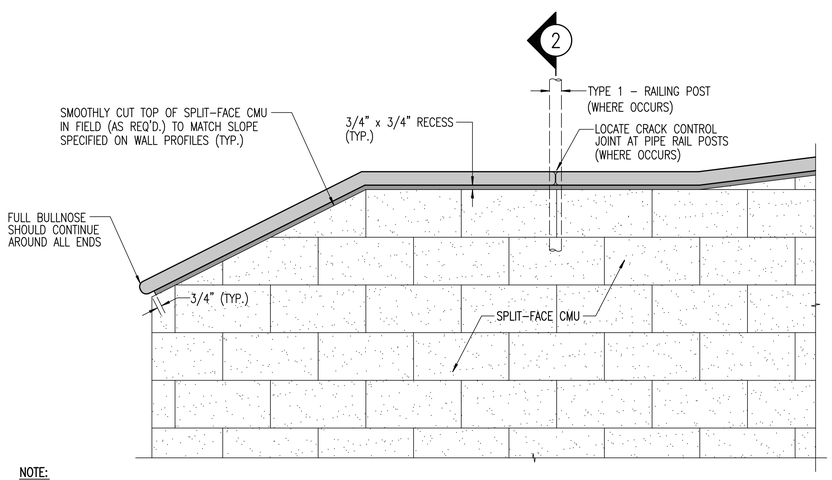

NOTE:

LENGTH OF CMU WALL CAP SHALL BE ADJUSTED AS REQUIRED TO FOLLOW THE SAME SMOOTH ALIGNMENT AND PROFILE OF THE CMU WALL.

ELEVATION – CMU WALL CAP 3

SCALE: 1" = 1'-0"

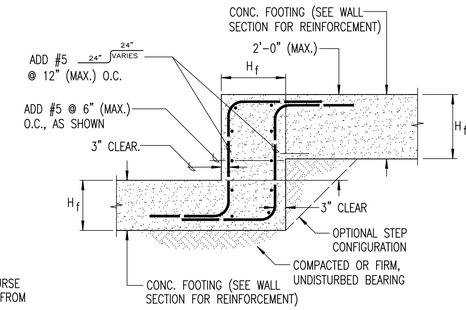

4 DETAIL – TYPICAL STEP FOOTING

NOT TO SCALE

NOTES FOR CMU WALL (ALL TYPES):

1. ALL CONCRETE SHALL HAVE 4,000 PSI (MIN.) COMPRESSIVE STRENGTH.
2. ALL REINFORCEMENT TO BE ASTM A615 GRADE 60.
3. ALL BLOCKS SHALL BE SOLID GROUTED.
4. VERT. BARS SHALL BE CONFIRMED IN PRESENCE OF ENGINEER TO BE AT CENTER OF MASONRY UNITS PRIOR TO GROUTING 1ST COURSE OF MASONRY; SPACERS SHALL BE IMPLEMENTED TO ENSURE BARS REMAIN AT CENTER FOR ALL SUBSEQUENT GROUTING OF MASONRY

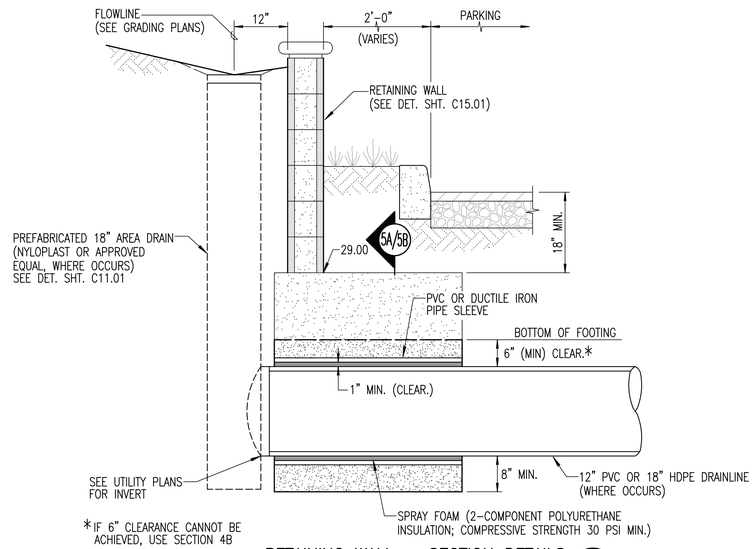

*IF 6" CLEARANCE CANNOT BE ACHIEVED, USE SECTION 4B

RETAINING WALL – SECTION DETAILS 5

SCALE: 3/4" = 1'-0"

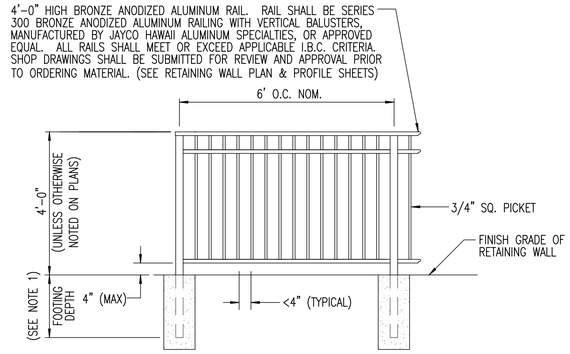

1. FOOTING DEPTH SHALL BE IN ACCORDANCE WITH MANUFACTURER'S RECOMMENDATIONS

6 RAILING DETAIL (TYPE 1)

SCALE: 1" = 2'

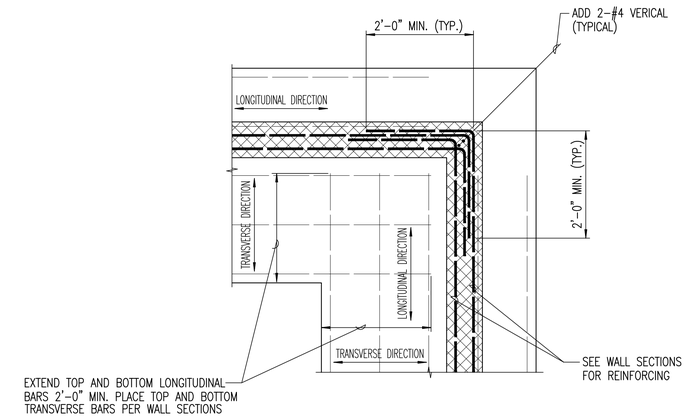

7 DETAIL – TYP. C.M.U. WALL CORNER REINFORCING

NOT TO SCALE

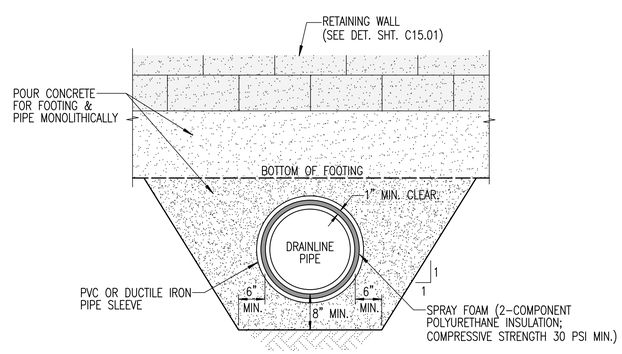

SECTION 5A

SCALE: 3/4" = 1'-0"

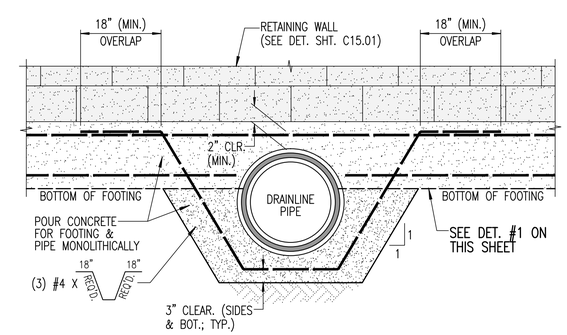

SECTION – FOOTING PENETRATION 5B

SCALE: 3/4" = 1'-0"

REVISION	DESCRIPTION	DATE

ALAN L. UNEMORI
LICENSED PROFESSIONAL ENGINEER
NO. 9354-S
HAWAII, U.S.A.

License Expires: April 30, 2018

SIGNATURE DATE

THIS WORK WAS PREPARED BY ME OR UNDER MY SUPERVISION AND CONSTRUCTION OF THIS PROJECT WILL BE UNDER MY OBSERVATION "AS DEFINED IN SECTION 16-115-2 OF THE HAWAII ADMINISTRATIVE RULES FOR PROFESSIONAL ENGINEERS, ARCHITECTS, LAND SURVEYORS AND LANDSCAPE ARCHITECTS"

WARREN S. UNEMORI ENGINEERING, INC.
CIVIL & STRUCTURAL ENGINEERS/LAND SURVEYORS
WELLS STREET PROFESSIONAL CENTER, SUITE 403
2145 WELLS STREET, WAILUKU, MAUI, HAWAII 96793

SOUTH MAUI COMMUNITY PARK RECREATION CENTER

PROJECT NO.: P12 / 012 TAX MAP KEY: (2) 2-2-02 : 42
Waiohuli - Keokea (Kihei), Makawao, Maui, Hawaii

TITLE SITE STRUCTURES DETAILS AND NOTES

B.A.W. DESIGNED BY	C.N.M. CHECKED BY	03031.30 JOB NUMBER	C15.02 SHEET
D.P.T. DRAWN BY	A.L.U. APPROVED BY	Nov. 1, 2016 DATE	OF SHEETS
SCALE AS NOTED			

11-01-2016 (BID SET)

V:\Projects\03proj\03031.30 - South Maui Comm Park - Gymnasium (ADC)\dwg\construct\det-struct-03.dwg

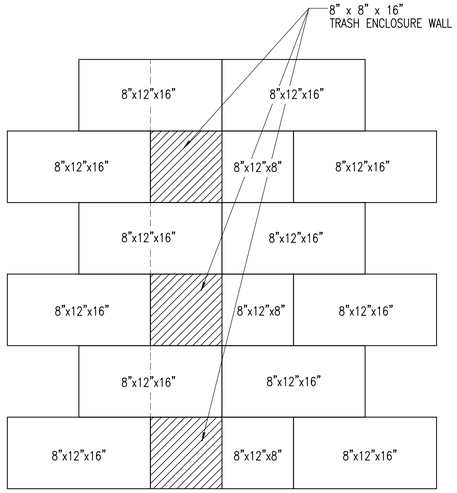

ELEVATION

SCALE: 1/8" = 1"

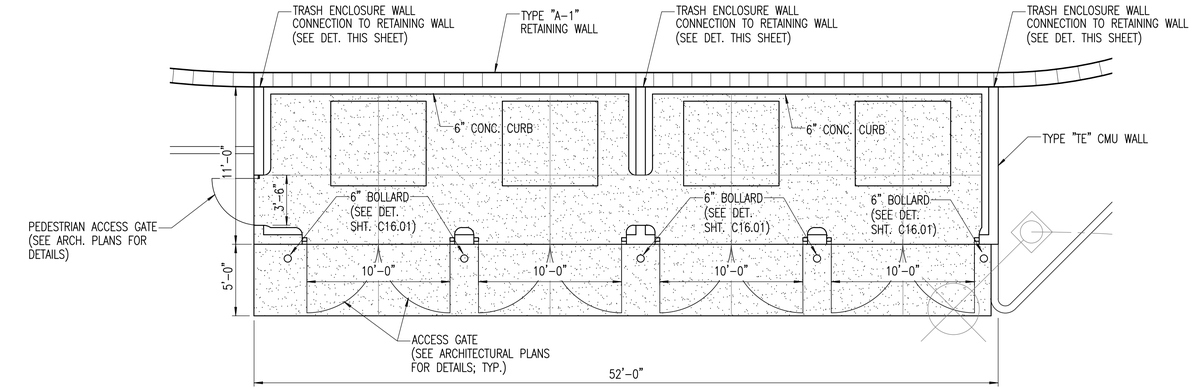

PLAN

SCALE: 1" = 5'

NOTES:

1. THE CONTRACTOR SHALL VERIFY WITH ARCHITECTURAL PLANS FOR TRASH ENCLOSURE DIMENSIONS AND TRASH HAULER'S REQUIREMENTS PRIOR TO CONSTRUCTION OF TRASH ENCLOSURE.
2. CONCRETE: f'c = 4,000 P.S.I. (MIN.)

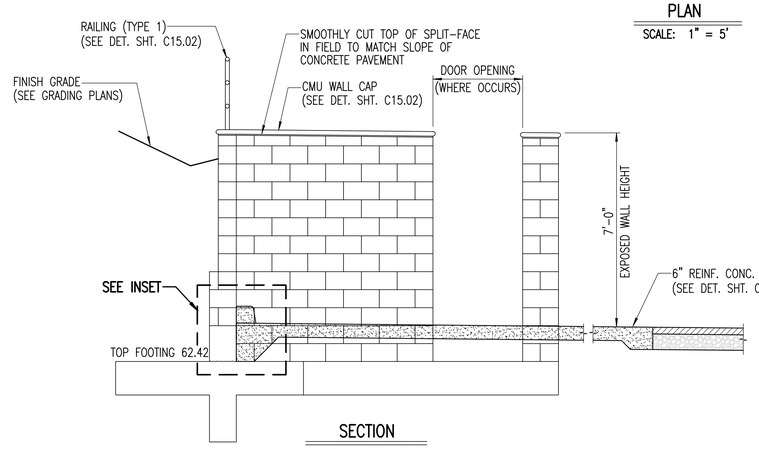

SECTION

SCALE: 3/8" = 1'-0"

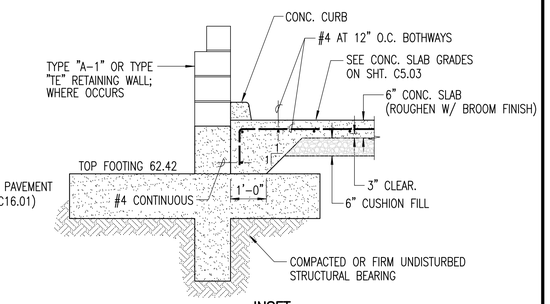

INSET

SCALE: 1/2" = 1'-0"

2 TRASH ENCLOSURE

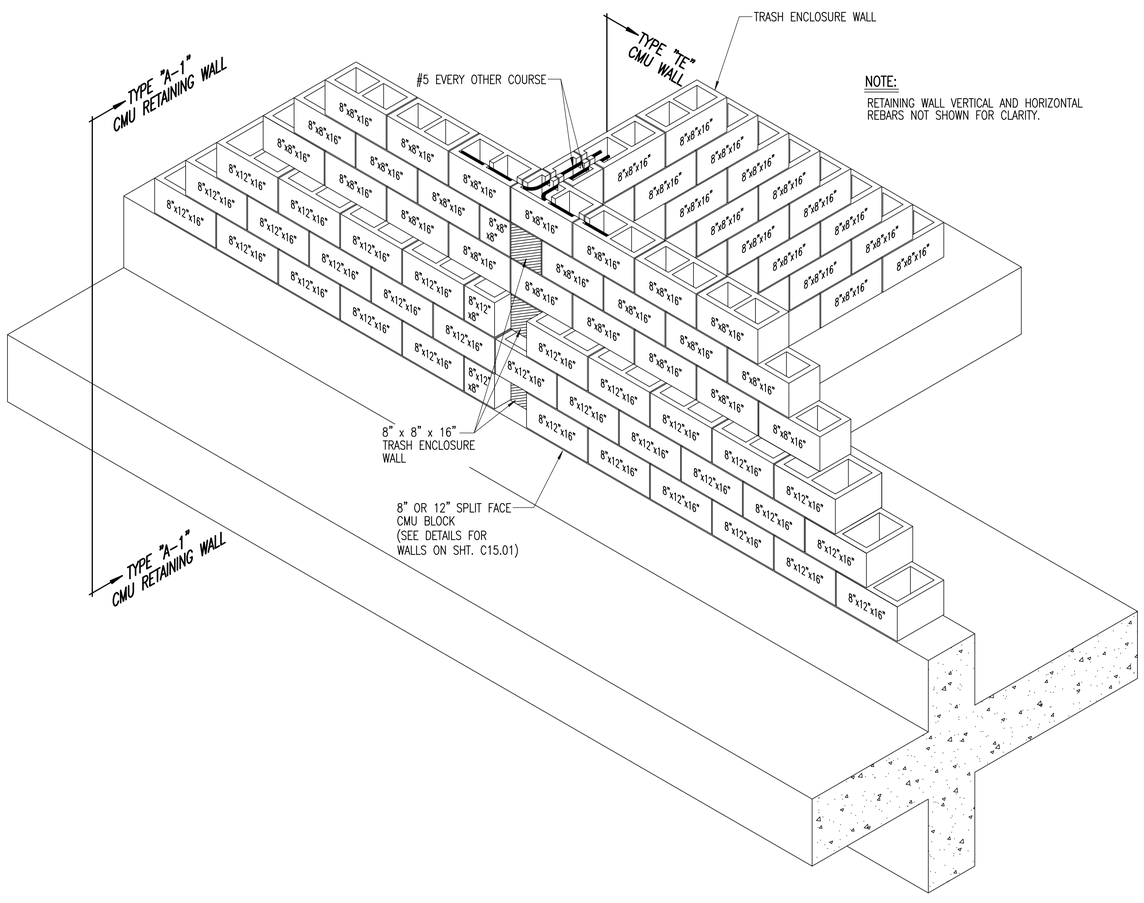

NOTE:

RETAINING WALL VERTICAL AND HORIZONTAL REBARS NOT SHOWN FOR CLARITY.

1 ISOMETRIC OF TRASH ENCLOSURE WALL CONNECTION TO RETAINING WALL

SCALE: 3/4" = 1'-0"

11-01-2016 (BID SET)

REVISION	DESCRIPTION	DATE

ALAN L. UNEMORI
LICENSED PROFESSIONAL ENGINEER
NO. 9354-S
HAWAII, U.S.A.

License Expires: April 30, 2018

SIGNATURE DATE

THIS WORK WAS PREPARED BY ME OR UNDER MY SUPERVISION AND CONSTRUCTION OF THIS PROJECT WILL BE UNDER MY OBSERVATION "AS DEFINED IN SECTION 16-115-2 OF THE HAWAII ADMINISTRATIVE RULES FOR PROFESSIONAL ENGINEERS, ARCHITECTS, LAND SURVEYORS AND LANDSCAPE ARCHITECTS"

WARREN S. UNEMORI ENGINEERING, INC.
CIVIL & STRUCTURAL ENGINEERS/LAND SURVEYORS
WELLS STREET PROFESSIONAL CENTER, SUITE 403
2145 WELLS STREET, WAILUKU, MAUI, HAWAII 96793

SOUTH MAUI COMMUNITY PARK RECREATION CENTER

PROJECT NO.: P12 / 012 TAX MAP KEY: (2) 2-2-02 : 42
Waiohuli - Keokea (Kihei), Makawao, Maui, Hawaii

TITLE SITE STRUCTURES DETAILS AND NOTES

B.A.W. DESIGNED BY	C.N.M. CHECKED BY	03031.30 JOB NUMBER	C15.03 SHEET
D.P.T. DRAWN BY	A.L.U. APPROVED BY	Nov. 1, 2016 DATE	OF SHEETS
AS NOTED SCALE			

I:\Projdata\03proj\03031.30 - South Maui Comm Park - Gymnasium (ADD)\dwg\contplans\det-wgll-00.dwg

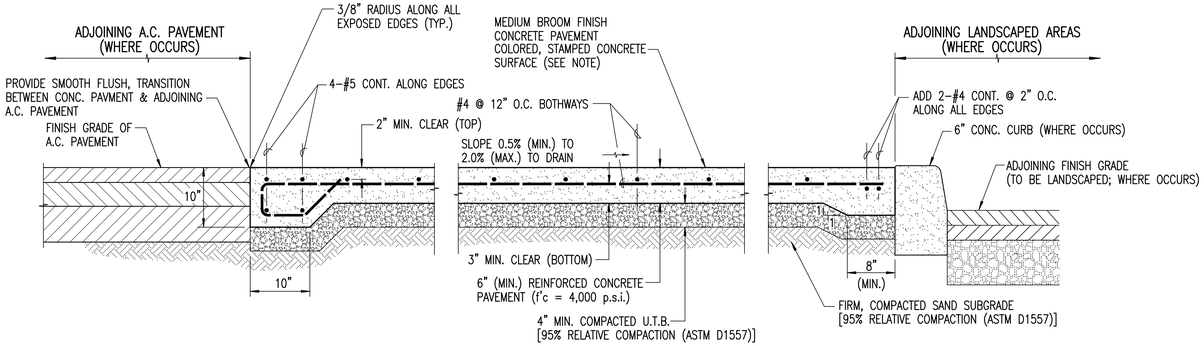

DETAIL – REINF. CONCRETE PAVEMENT SECTION

SCALE: 1" = 1'-0"

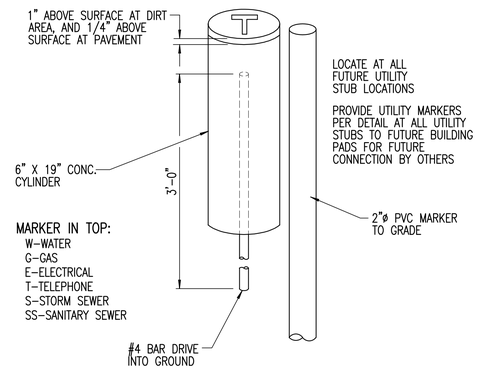

DETAIL – UTILITY MARKER INSTALLATION

NOT TO SCALE

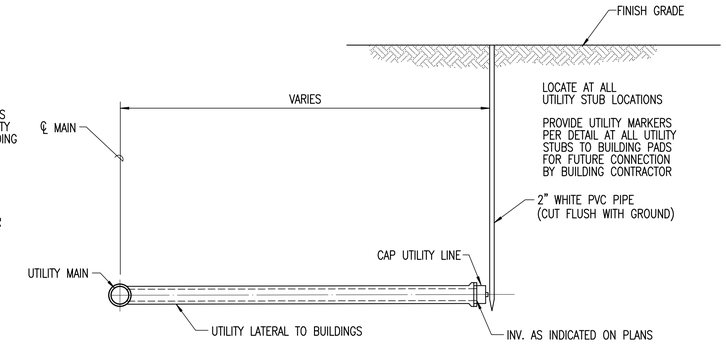

DETAIL – PVC MARKER TO GRADE

NOT TO SCALE

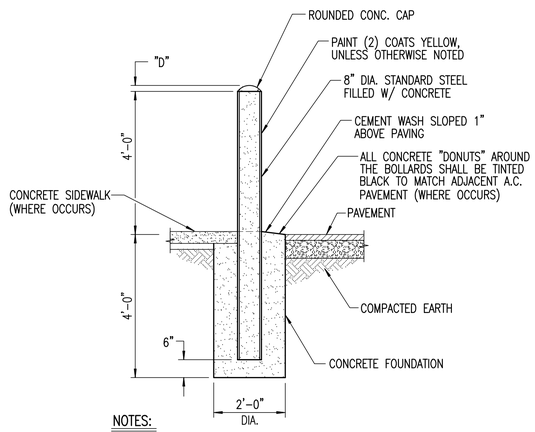

NOTES:

1. VERIFY LOCATION OF UNDERGROUND UTILITIES BEFORE DRILLING FOR CONCRETE FOUNDATION
2. WHERE 4" OR 6" PIPE BOLLARDS ARE SPECIFIED, CONC. BASES SHALL BE 1'-6" DIA. BY 3'-0" DEEP
3. DIMENSION (D) OF ROUNDED CONCRETE CAP SHALL BE 1/4 PIPE DIAMETER.
4. PAINT "BROWN" WHEN LOCATED IN PLANTER
5. CONCRETE: f'c = 4,000 P.S.I. (MIN.)

(1) DETAIL – EXTERIOR PIPE BOLLARD

SCALE: 1" = 2'

details/safeway/1-2-inch.dwg

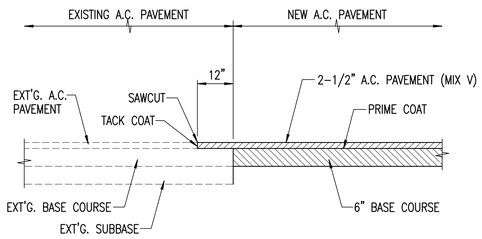

DETAIL – EXT'G. A.C. AND NEW A.C. PAVEMENT CONNECTION

NOT TO SCALE

CONCRETE NOTES:

1. CONCRETE: ALL CONCRETE SHALL BE CLASS "A" CONCRETE (f'c = 4,000 P.S.I.), UNLESS OTHERWISE SHOWN WATER-CEMENT RATIO SHALL NOT EXCEED 0.55. REINFORCING STEEL: ASTM A615 GRADE 60
2. SUBGRADE SHALL BE MOISTURE CONDITIONED AND COMPACTED TO 95% RELATIVE COMPACTION AND BE ACCEPTED BY SOILS ENGINEER PRIOR TO PLACEMENT OF REINFORCING STEEL AND CONCRETE.
3. REINFORCING STEEL SHALL BE SUPPORTED BY APPROVED CHAIRS OR BLOCKS AND SHALL BE TIED TO PREVENT MOVEMENT DURING PLACEMENT AND CONSOLIDATION OF CONCRETE.
4. SUBGRADE SHALL BE KEPT CONTINUOUSLY MOISTURE-CONDITIONED A MINIMUM OF 1 HOUR PRIOR TO PLACEMENT OF CONCRETE.

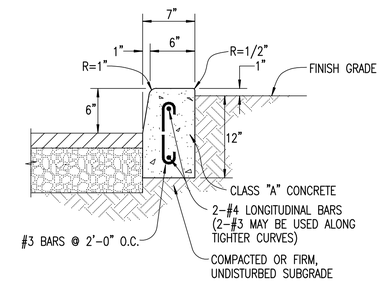

DETAIL – 6" REINFORCED CONC. CURB

SCALE: 1" = 1'-0"

details/roads/curb0002.dwg

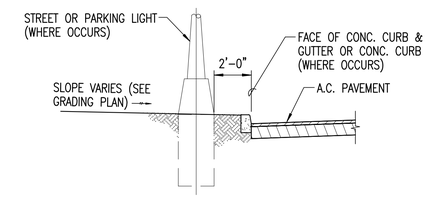

PARTIAL SECTION – POLE CLEARANCE

SCALE: 1/4 IN. = 1 FT.

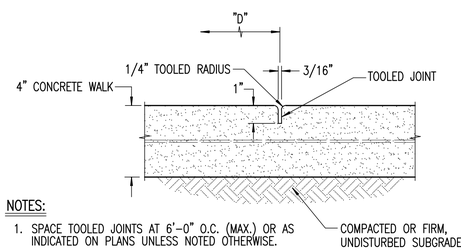

NOTES:

1. SPACE TOOLED JOINTS AT 6'-0" O.C. (MAX.) OR AS INDICATED ON PLANS UNLESS NOTED OTHERWISE.
2. CONTRACTOR MAY SAWCUT CONTROL JOINTS.

DETAIL – TOOLED CONTROL JOINT

SCALE: 3" = 1'-0"

details/safeway/3-inch.dwg

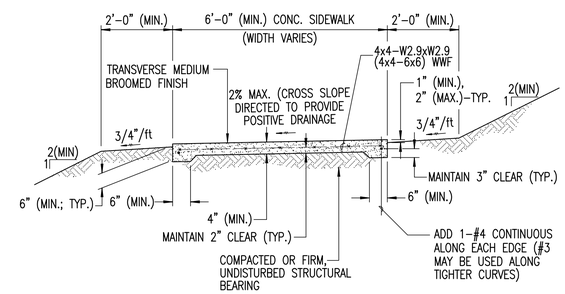

TYPICAL SECTION – SITE SIDEWALKS & WALKWAYS

SCALE: 1/2 IN. = 1 FT.

details/site/swalk003.dwg

NOTES:

1. CONCRETE: f'c = 4,000 P.S.I. (MIN.)
2. STEEL REINFORCEMENT: f'y = 40,000 P.S.I. (MIN.) (ASTM A615 GRADE 40)
3. PROVIDE 1/4" RADIUS TOOLED EDGING & 3/8" DEEP TOOLED CRACK CONTROL JOINT @ 4'-0" (MAX.) O.C. & AT ALL JUNCTIONS & CONNECTIONS TO BUILDING LANDINGS.
4. WELDED WIRE FABRIC AND REINFORCING STEEL SHALL BE SUPPORTED BY APPROVED CHAIRS OR BLOCKS TO SET THE REINFORCEMENT AT THE REQUITED LOCATION TO MAINTAIN THE REQUIRED MINIMUM COVERS.
5. WELDED WIRE FABRIC SHALL BE FLAT SHEETS. ROLLED WWF WILL NOT BE ALLOWED.

NOTES:

1. ASSEMBLY SHALL BE "CLUSTERS, FLAT-TOP SERIES (MAUI COUNTY CUSTOM MODIFIED MODEL CF-0021G-DR)", MANUFACTURED BY WINDSOR BARREL WORKS.
2. ALL FASTENERS SHALL BE ANODIZED ALUMINUM.
3. BARREL DIMENSIONS: EACH BARREL IS 31" HIGH. THE OUTSIDE DIAMETER IS 19". WEIGHT IS 40 LBS.
4. TOP & BOTTOM FRAME: CAST ALUMINUM 19" OUTSIDE DIAMETER, 1.5" HIGH x 0.25" THICK, WITH 0.625" RETURN. POWDER COATED FINISH.
5. SLATS: TWENTY, 1" x 3" (NOMINAL) 100% POST-CONSUMER, RECYCLED HDPE PLASTIC SLATS.
6. FASTENERS: SLATS ARE FASTENED TO THE BARREL RINGS VIA ANODIZED ALUMINUM CARRIAGE BOLTS AND FLANGE NUTS.
7. LINER: EACH BARREL INCLUDES A 28 GALLON CAPACITY RIGID LINER MOLDED OF RECYCLED HDPE.
8. RECYCLED LID: POWDER COATED ALUMINUM PLATE LID. ATTACHED VIA ANODIZED ALUMINUM TETHER CHAIN.
9. SIDE ACCESS: SIDE-DOOR ACCESS VIA TWO HINGED DOORS. (STAINLESS STEEL HINGES)
10. CENTER POST: CENTER POST IS MADE OF A MIXTURE OF 100% RECYCLED PLASTICS WITH NO LESS THAN 50% POST CONSUMER. THE DIMENSIONS FOR THE 4-SIDED POST DIMENSIONS ARE 6" x 6" BY 96" TALL. COLOR IS BLACK. HARDWARE IS PROVIDED TO FASTEN THE BARRELS AND POST TOGETHER.
11. GRAPHICS: LABELS ARE ABRASION RESISTANT, 10 MIL PRESSURE SENSITIVE DECALS.
12. SEE LANDSCAPE PLANS FOR LOCATIONS.

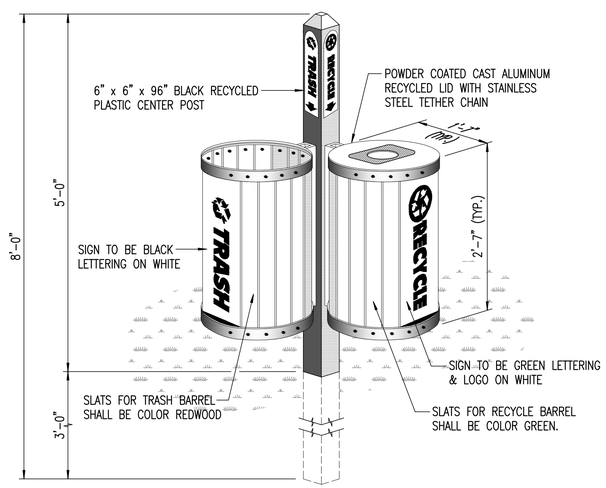

DETAIL – COMBINATION TRASH & RECYCLING RECEPTACLE

NOT TO SCALE

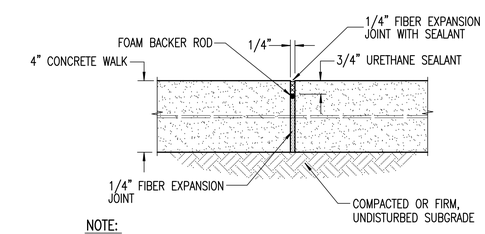

NOTE:

PROVIDE CONSTRUCTION JOINTS AT 25' O.C. MAX. IN EITHER DIRECTION WITH SQUARE FOOTAGE LESS THAN 400 S.F. AND AT CURVES, TANGENTS, AND CORNERS (UNLESS NOTED OTHERWISE).

DETAIL – CONSTRUCTION JOINT

SCALE: 3" = 1'-0"

details/safeway/3-inch.dwg

REVISION	DESCRIPTION	DATE

CLIFFORD N. MUKAI
LICENSED PROFESSIONAL ENGINEER
NO. 6667-C
HAWAII, U.S.A.

License Expires: April 30, 2018

SIGNATURE DATE

THIS WORK WAS PREPARED BY ME OR UNDER MY SUPERVISION AND CONSTRUCTION OF THIS PROJECT WILL BE UNDER MY OBSERVATION "AS DEFINED IN SECTION 16-115-2 OF THE HAWAII ADMINISTRATIVE RULES FOR PROFESSIONAL ENGINEERS, ARCHITECTS, LAND SURVEYORS AND LANDSCAPE ARCHITECTS"

WARREN S. UNEMORI ENGINEERING, INC.
CIVIL & STRUCTURAL ENGINEERS/LAND SURVEYORS
WELLS STREET PROFESSIONAL CENTER, SUITE 403
2145 WELLS STREET, WAILUKU, MAUI, HAWAII 96793

SOUTH MAUI COMMUNITY PARK RECREATION CENTER

PROJECT NO.: P12 / 012 TAX MAP KEY: (2) 2-2-02 : 42
Waiohuli - Keokea (Kihei), Makawao, Maui, Hawaii

TITLE MISCELLANEOUS DETAILS

B.A.W. DESIGNED BY	C.N.M. CHECKED BY	03031.30 JOB NUMBER	C16.01 SHEET
D.P.T. DRAWN BY	C.N.M. APPROVED BY	Nov. 1, 2016 DATE	OF SHEETS
SCALE AS NOTED			

11-01-2016 (BID SET)

K:\Projects\03proj\03031.30 - South Maui Comm Park - Gymnasium (ADC)\dwg\conceptual\det-misc-00.dwg

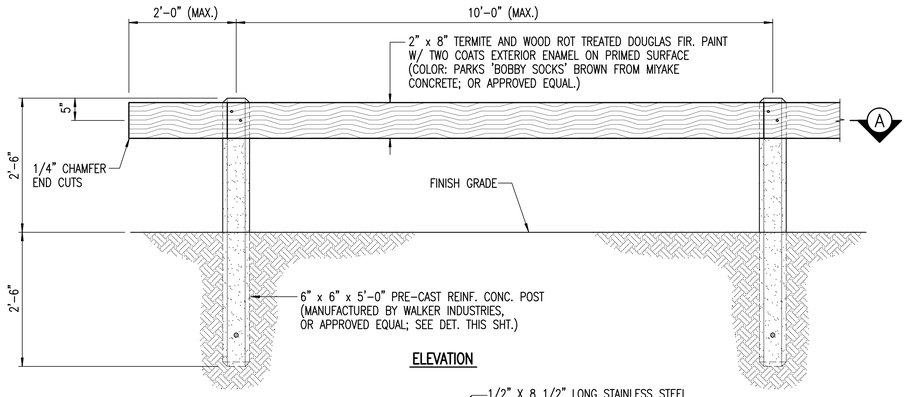

ELEVATION

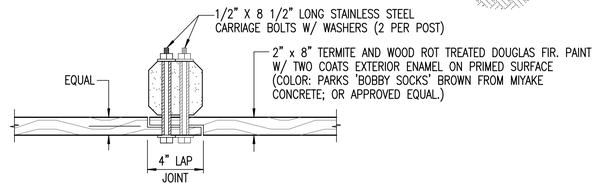

SECTION – TYPICAL LAP SPLICE (WHERE OCCURS) (A)

DETAIL – TRAFFIC BARRIER WITH SINGLE RAIL

NOT TO SCALE

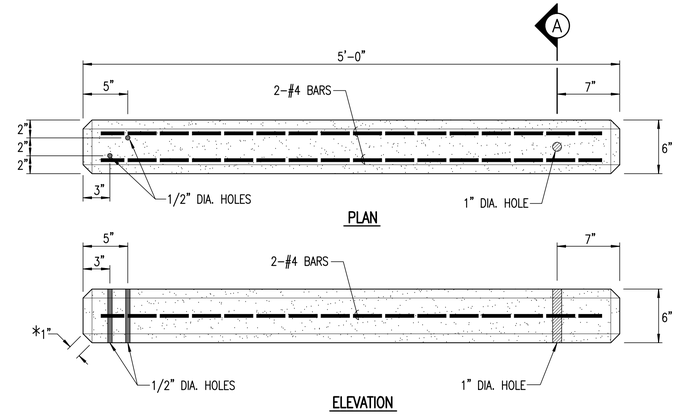

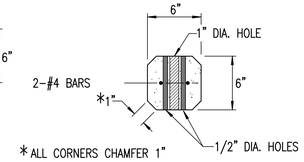

SECTION (A)

NOTES:

1. CONTRACTOR SHALL CONFIRM LAYOUT OF POSTS WITH ENGINEER PRIOR TO INSTALLATION.
2. CONCRETE: f'c = 4,000 P.S.I. (MIN.)

DETAIL – PRE-CAST REINFORCED CONCRETE POST

SCALE: 1-1/2" = 1'-0"

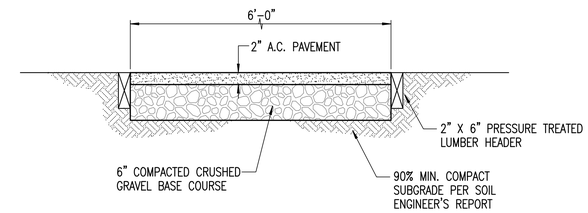

DETAIL – ASPHALT JOGGING PATH

SCALE: 1" = 1'-0"

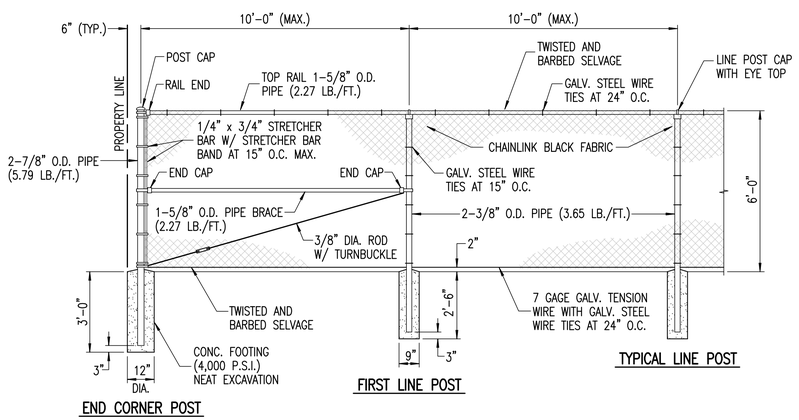

6'-0" HIGH CHAINLINK FENCE

SCALE: 3/8" = 1'-0"

NOTES:

1. POST AND BRACES SHALL BE SCHEDULE 40 (STANDARD WEIGHT) PIPE, SIZES SPECIFIED ARE OUTSIDE DIAMETER.
2. FENCING MATERIAL SHALL BE PVC COATED GALVANIZED STEEL.
3. TOP RAIL COUPLINGS SHALL BE LOCATED WITHIN 6" OF LINE POSTS.
4. TOP OF CONCRETE FOOTING SHALL BE CROWNED TO SHED WATER
5. TIE WIRES SHALL BE #9 GAUGE UNLESS NOTED OTHERWISE.
6. PIPE AND POST SIZES ARE NOMINAL DIAMETER (N.D.)
7. ALL PIPES, FITTINGS, AND POSTS, SHALL BE BLACK PVC COATED HOT-DIP GALVANIZED OR BLACK POWDER COATED. CHAINLINK FABRIC SHALL BE BLACK PVC COATED GALVANIZED.
8. ALL FABRIC SHALL BE CONTINUOUS AND FASTENED TO END POSTS BY STRETCHER TENSION BARS AND TENSION BANDS SPACED APPROXIMATELY 15" APART.
9. WIRE FASTENINGS SHALL BE #12 GAUGE GALVANIZED TIE WIRE.
10. LINE POSTS WIRE FASTENINGS SHALL BE SPACED 14" APART.
11. HORIZONTAL RAIL WIRE FASTENINGS SHALL BE SPACED 14" APART.
12. NO SPLICING SHALL BE ALLOWED ON ANY STRAIGHT-RUN PIPE.
13. TOP AND BOTTOM SALVAGES SHALL BE KNUCKLED FINISH.
14. GATE FRAME SHALL BE OF WELDED PIPE CONSTRUCTION.
15. WELDED CONNECTIONS SHALL BE PAINTED WITH TWO COATS OF Z.R.C. COLD GALVANIZING COMPOUND, AND PAINTED TO MATCH COLOR.
16. GATE HINGES SHALL BE TACK WELDED TO POST.
17. PAD LOCKS SHALL BE FURNISHED BY CONTRACTOR.
18. FOR WELDED CONNECTIONS: CORNERS SHALL BE MITERED AND PIPE BRACES PROPERLY COPED.

REVISION	DESCRIPTION	DATE

CLIFFORD N. MUKAI
LICENSED PROFESSIONAL ENGINEER
NO. 6667-C
HAWAII, U.S.A.

License Expires: April 30, 2018

SIGNATURE DATE

THIS WORK WAS PREPARED BY ME OR UNDER MY SUPERVISION AND CONSTRUCTION OF THIS PROJECT WILL BE UNDER MY OBSERVATION "AS DEFINED IN SECTION 16-115-2 OF THE HAWAII ADMINISTRATIVE RULES FOR PROFESSIONAL ENGINEERS, ARCHITECTS, LAND SURVEYORS AND LANDSCAPE ARCHITECTS"

WARREN S. UNEMORI ENGINEERING, INC.
CIVIL & STRUCTURAL ENGINEERS/LAND SURVEYORS
WELLS STREET PROFESSIONAL CENTER, SUITE 403
2145 WELLS STREET, WAILUKU, MAUI, HAWAII 96793

SOUTH MAUI COMMUNITY PARK RECREATION CENTER

PROJECT NO.: P12 / 012 TAX MAP KEY: (2) 2-2-02 : 42
Waiohuli - Keokea (Kihei), Makawao, Maui, Hawaii

TITLE MISCELLANEOUS DETAILS

B.A.W. DESIGNED BY	C.N.M. CHECKED BY	03031.30 JOB NUMBER	C16.02 SHEET
D.P.T. DRAWN BY	C.N.M. APPROVED BY	Nov. 1, 2016 DATE	OF SHEETS
AS NOTED SCALE			

11-01-2016 (BID SET)

I:\Projects\03proj\03031.30 - South Maui Comm Park - Gymnasium (ADC)\dwg\compians\det-misc-100.dwg

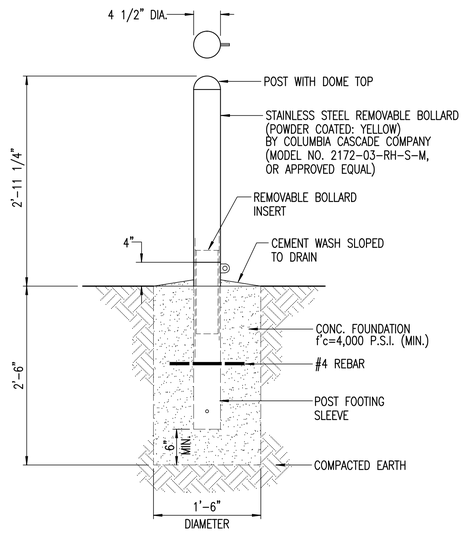

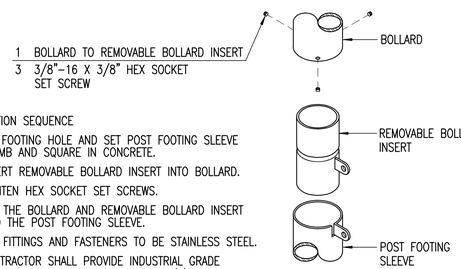

INSTALLATION SEQUENCE

1. DIG FOOTING HOLE AND SET POST FOOTING SLEEVE PLUMB AND SQUARE IN CONCRETE.
2. INSERT REMOVABLE BOLLARD INSERT INTO BOLLARD.
3. TIGHTEN HEX SOCKET SET SCREWS.
4. SET THE BOLLARD AND REMOVABLE BOLLARD INSERT INTO THE POST FOOTING SLEEVE.
5. ALL FITTINGS AND FASTENERS TO BE STAINLESS STEEL.
6. CONTRACTOR SHALL PROVIDE INDUSTRIAL GRADE STAINLESS STEEL PADLOCK WITH TWO (2) SETS OF KEYS. (ALL PADLOCKS FOR REMOVABLE BOLLARDS TO BE KEYED THE SAME)

DETAIL – REMOVABLE BOLLARD

NOT TO SCALE

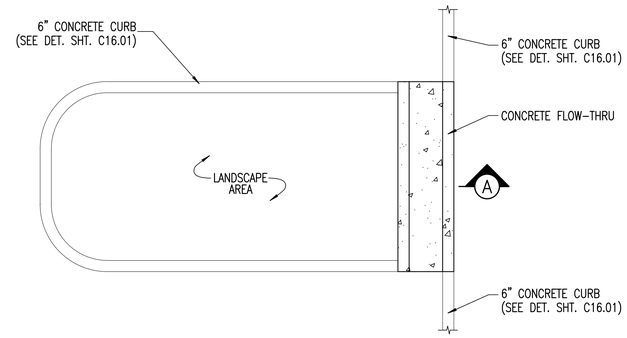

PLAN

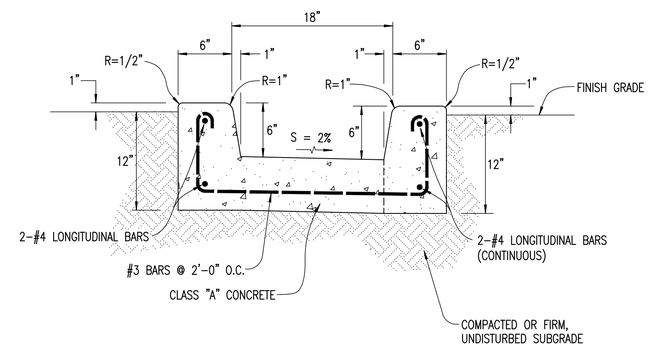

TYPICAL SECTION (A)

NOTES:

1. CONCRETE: f'_c = 4,000 P.S.I. (MIN.)
2. STEEL REINFORCEMENT: f'_y = 40,000 P.S.I. (MIN.) (ASTM A615 GRADE 40)
3. PROVIDE 1/4" RADIUS TOOLED EDGING & 3/8" DEEP TOOLED CRACK CONTROL JOINT @ 4'-0" (MAX.) O.C. & AT ALL JUNCTIONS & CONNECTIONS TO BUILDING LANDINGS.
4. WELDED WIRE FABRIC AND REINFORCING STEEL SHALL BE SUPPORTED BY APPROVED CHAIRS OR BLOCKS TO SET THE REINFORCEMENT AT THE REQUIRED LOCATION TO MAINTAIN THE REQUIRED MINIMUM COVERS.

DETAIL – CONCRETE FLOW-THRU

NOT TO SCALE

11-01-2016 (BID SET)

REVISION	DESCRIPTION	DATE

CLIFFORD N. MUKAI
LICENSED PROFESSIONAL ENGINEER
NO. 6667-C
HAWAII, U.S.A.

License Expires: April 30, 2018

SIGNATURE DATE

THIS WORK WAS PREPARED BY ME OR UNDER MY SUPERVISION AND CONSTRUCTION OF THIS PROJECT WILL BE UNDER MY OBSERVATION "AS DEFINED IN SECTION 16-115-2 OF THE HAWAII ADMINISTRATIVE RULES FOR PROFESSIONAL ENGINEERS, ARCHITECTS, LAND SURVEYORS AND LANDSCAPE ARCHITECTS"

WARREN S. UNEMORI ENGINEERING, INC.
CIVIL & STRUCTURAL ENGINEERS/LAND SURVEYORS
WELLS STREET PROFESSIONAL CENTER, SUITE 403
2145 WELLS STREET, WAILUKU, MAUI, HAWAII 96793

SOUTH MAUI COMMUNITY PARK RECREATION CENTER

PROJECT NO.: P12 / 012 TAX MAP KEY: (2) 2-2-02 : 42
Waiohuli - Keokea (Kihei), Makawao, Maui, Hawaii

TITLE MISCELLANEOUS DETAILS

B.A.W. DESIGNED BY	C.N.M. CHECKED BY	03031.30 JOB NUMBER	C16.03 SHEET
D.P.T. DRAWN BY	C.N.M. APPROVED BY	Nov. 1, 2016 DATE	OF SHEETS
AS NOTED SCALE			

V:\Projects\03proj\03031.30 - South Maui Comm Park - Gymnasium (ADC)\dwg\contplans\det-misc-00.dwg

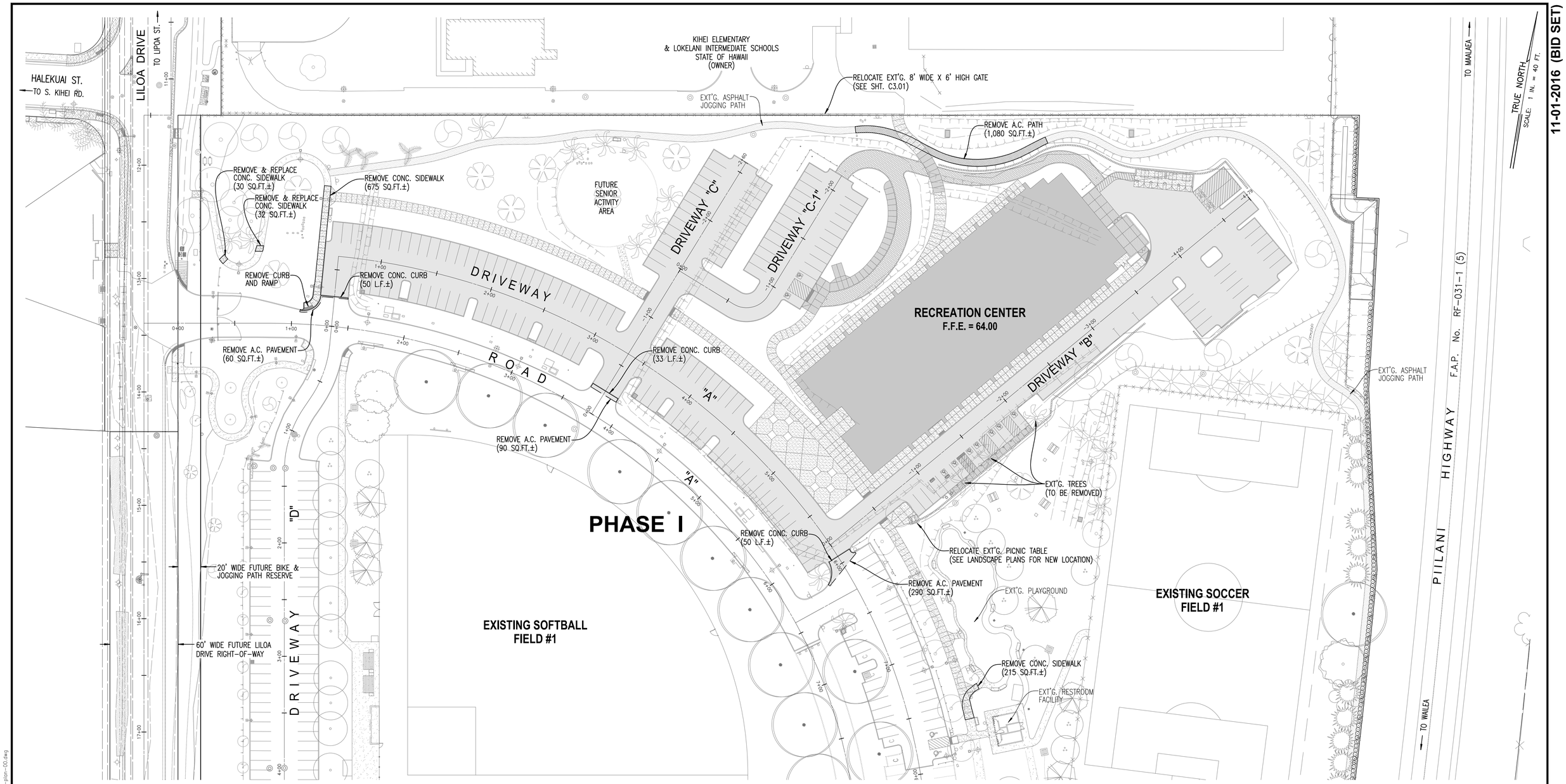

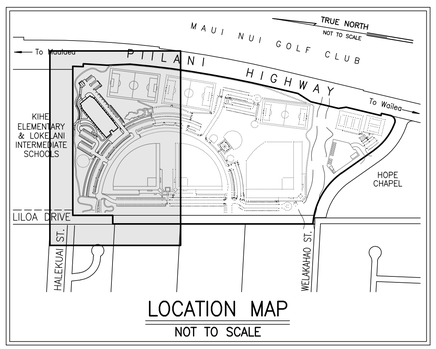

LOCATION MAP
NOT TO SCALE

REVISION	DESCRIPTION	DATE

CLIFFORD N. MUKAI
LICENSED PROFESSIONAL ENGINEER
NO. 6667-C
HAWAII, U.S.A.

License Expires: April 30, 2018

SIGNATURE DATE

THIS WORK WAS PREPARED BY ME OR UNDER MY SUPERVISION AND CONSTRUCTION OF THIS PROJECT WILL BE UNDER MY OBSERVATION "AS DEFINED IN SECTION 16-115-2 OF THE HAWAII ADMINISTRATIVE RULES FOR PROFESSIONAL ENGINEERS, ARCHITECTS, LAND SURVEYORS AND LANDSCAPE ARCHITECTS"

WARREN S. UNEMORI ENGINEERING, INC.
CIVIL & STRUCTURAL ENGINEERS/LAND SURVEYORS
WELLS STREET PROFESSIONAL CENTER, SUITE 403
2145 WELLS STREET, WAILUKU, MAUI, HAWAII 96793

SOUTH MAUI COMMUNITY PARK
RECREATION CENTER

PROJECT NO.: P12 / 012 TAX MAP KEY: (2) 2-2-02 : 42
Waiohuli - Keokea (Kihei), Makawao, Maui, Hawaii

TITLE DEMOLITION PLAN

B.A.W. DESIGNED BY	C.N.M. CHECKED BY	03031.30 JOB NUMBER	C17.01 SHEET
D.P.T. DRAWN BY	C.N.M. APPROVED BY	Nov. 1, 2016 DATE	OF SHEETS
AS NOTED SCALE			

11-01-2016 (BID SET)

V:\Projects\03pro\03031.30 - South Maui Comm Park - Gymnasium (ADC)\dwg\compliance\demo-plan-00.dwg

11-01-2016 (BID SET)

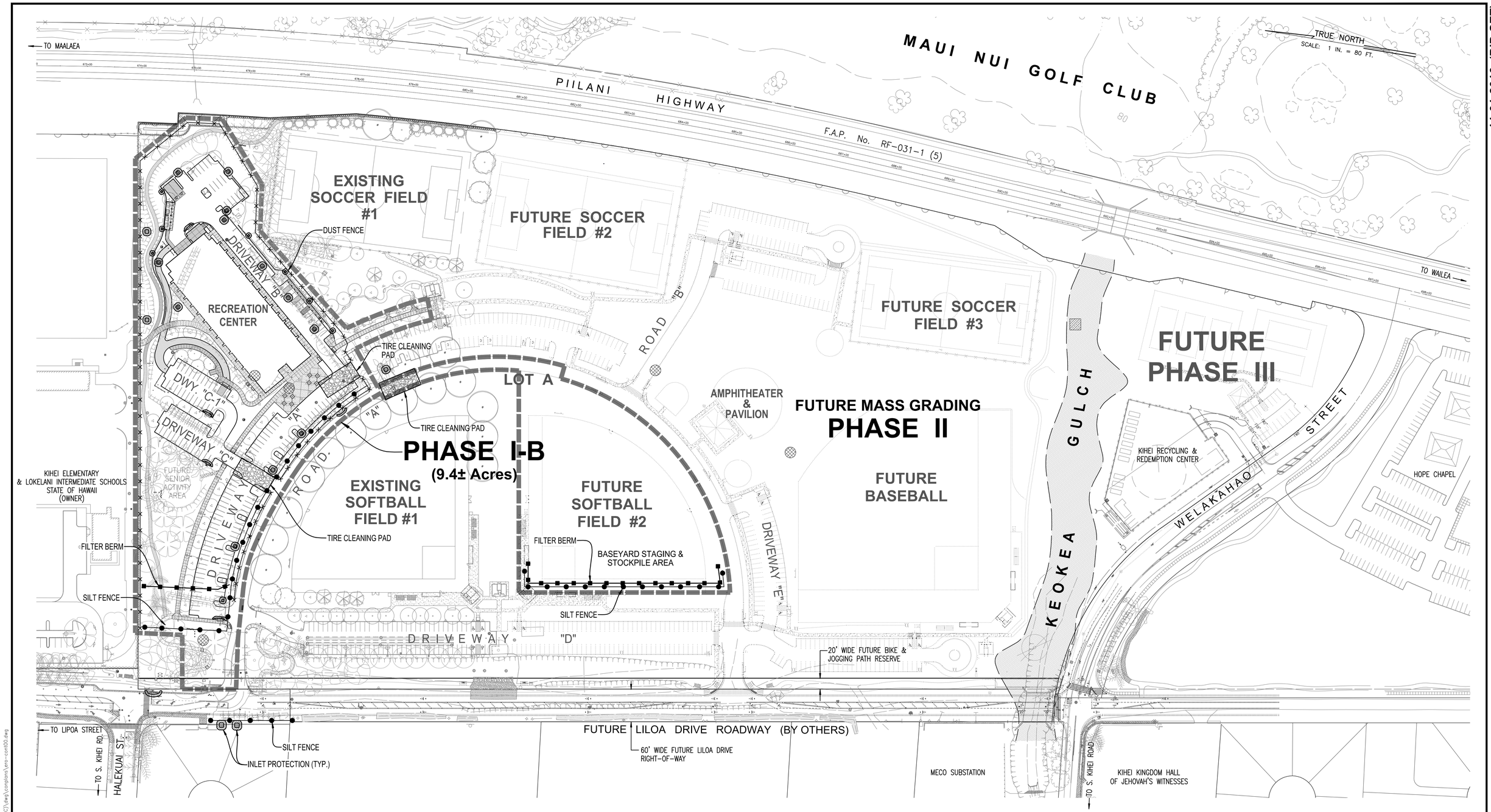

LEGEND:

- DUST FENCE
- SILT FENCE
- FILTER BERM (CONTRACTOR SHALL IMPLEMENT FILTER BERM AS REQUIRED DURING THE COURSE OF CONSTRUCTION)
- TIRE CLEANING PAD (CONTRACTOR SHALL IMPLEMENT TIRE CLEANING PADS AT ADDITIONAL LOCATIONS AS MAY BE NECESSARY DURING THE COURSE OF CONSTRUCTION)
- APPROX. PROJECT LIMITS (9.4± ACRES)
- INLET PROTECTION (TYP.; SEE NOTE #3)
- ARCHAEOLOGICAL SITES – DATA RECOVERY COMPLETED
- ARCHAEOLOGICAL SITES – PRESERVED

NOTES:

1. SEE SHTS. C18.02 & C18.03 FOR ADDITIONAL NOTES AND DETAILS.
2. THE CONTRACTOR, IN ADDITION TO ANY FENCING REQUIRED FOR DUST AND EROSION MITIGATION, SHALL INSTALL ANY REQUIRED FENCING, AND IMPLEMENT ANY OTHER MEASURES, TO PROVIDE A SAFE AND SECURE CONSTRUCTION SITE.
3. INLET PROTECTION SHALL BE INSTALLED AT ALL NEARBY EXISTING AND PROPOSED CATCH BASINS (SEE DET. SHT. C18.03).
4. ANY TEMPORARY STOCKPILES SHALL NOT EXCEED 15 FEET IN HEIGHT AND 2H:1V SIDE SLOPES AND SHALL COMPLY WITH ALL COUNTY REQUIREMENTS. CONTRACTOR SHALL INSTALL SILT FENCE AND ANY ADDITIONAL BMP'S, AS REQUIRED, ALONG THE DOWNSTREAM TOE OF ALL STOCKPILES. CONTRACTOR SHALL RESTORE STOCKPILE AREA TO EXISTING OR BETTER CONDITIONS.

REVISION	DESCRIPTION	DATE

CLIFFORD N. MUKAI
LICENSED PROFESSIONAL ENGINEER
NO. 6667-C
HAWAII, U.S.A.

License Expires: April 30, 2018

SIGNATURE DATE

THIS WORK WAS PREPARED BY ME OR UNDER MY SUPERVISION AND CONSTRUCTION OF THIS PROJECT WILL BE UNDER MY OBSERVATION "AS DEFINED IN SECTION 16-115-2 OF THE HAWAII ADMINISTRATIVE RULES FOR PROFESSIONAL ENGINEERS, ARCHITECTS, LAND SURVEYORS AND LANDSCAPE ARCHITECTS"

WARREN S. UNEMORI ENGINEERING, INC.
CIVIL & STRUCTURAL ENGINEERS/LAND SURVEYORS
WELLS STREET PROFESSIONAL CENTER, SUITE 403
2145 WELLS STREET, WAILUKU, MAUI, HAWAII 96793

SOUTH MAUI COMMUNITY PARK RECREATION CENTER

PROJECT NO.: P12 / 012 TAX MAP KEY: (2) 2-2-02 : 42
Waiohuli - Keokea (Kihei), Makawao, Maui, Hawaii

TITLE EROSION CONTROL PLAN

B.A.W. DESIGNED BY	C.N.M. CHECKED BY	03031.30 JOB NUMBER	C18.01 SHEET
D.P.T. DRAWN BY	C.N.M. APPROVED BY	Nov. 1, 2016 DATE	OF SHEETS
SCALE AS NOTED			

K:\Projects\03proj\03031.30 - South Maui Comm Park - Gymnasium (ADC)\dwg\constpln\ero-cont00.dwg

NOTES:

GRADING:

1. THE CONTRACTOR SHALL OBTAIN A "GRADING PERMIT" FROM THE DEVELOPMENT SERVICES ADMINISTRATION (D.S.A.), DEPT. OF PUBLIC WORKS (D.P.W.), FOUR (4) WEEKS PRIOR TO COMMENCEMENT OF ANY CLEARING AND GRUBBING. A SATISFACTORY DUST AND EROSION CONTROL PLAN SHALL BE SUBMITTED BY THE CONTRACTOR FOR APPROVAL PRIOR TO ISSUANCE OF THE GRADING PERMIT.
2. THE CONTRACTOR SHALL REMOVE ALL SILT AND DEBRIS RESULTING FROM HIS WORK AND DEPOSITED IN DRAINAGE FACILITIES, ROADWAYS AND OTHER AREAS. THE COST INCURRED FOR ANY NECESSARY REMEDIAL ACTION BY THE DIRECTOR OF PUBLIC WORKS, CHIEF SANITARIAN (DEPARTMENT OF HEALTH) SHALL BE BORNE BY THE CONTRACTOR.
3. THE CONTRACTOR, AT HIS OWN EXPENSE, SHALL KEEP THE PROJECT AREA AND SURROUNDING AREAS FREE FROM DUST NUISANCE. THE WORK SHALL BE IN CONFORMANCE WITH THE AIR POLLUTION CONTROL STANDARDS AND REGULATIONS OF THE STATE DEPT. OF HEALTH.
4. ALL GRADING OPERATIONS SHALL BE PERFORMED IN CONFORMANCE WITH THE APPLICABLE PROVISIONS OF THE WATER POLLUTION CONTROL AND WATER QUALITY STANDARDS OF PUBLIC HEALTH REGULATIONS, STATE DEPT. OF HEALTH, NATIONAL POLLUTANT DISCHARGE ELIMINATION SYSTEM (NPDES) PERMIT, AND THE COUNTY GRADING ORDINANCE.
5. CONSTRUCTION DEBRIS AND WASTES SHALL BE DEPOSITED AT APPROPRIATE SITES. THE DISPOSAL SITE MUST FULFILL THE REQUIREMENTS OF THE GRADING ORDINANCE.
6. THE CONTRACTOR SHALL BE RESPONSIBLE FOR ALL CONSTRUCTION STAKEOUT.
7. PRIOR TO ISSUANCE OF THE GRADING PERMIT, THE CONTRACTOR SHALL MEET WITH THE D.S.A. AND PROVIDE INFORMATION ON THE SOURCE OF WATER FOR DUST CONTROL, AND JUSTIFY THE NUMBER OF WATER TRUCKS TO BE USED FOR THE CLEARING, GRUBBING, AND LOADING OPERATIONS.
8. ALL EARTHWORK SHALL BE DONE IN STRICT ACCORDANCE WITH ALL RECOMMENDATIONS & REQUIREMENTS OF SOILS ENGINEER AND SHALL BE DONE UNDER THE OBSERVATION OF SOILS ENGINEER.
9. SEE ENVIRONMENTAL PROTECTION, WATER POLLUTION AND EROSION CONTROL NOTES ON SHTS. C2.03 & C2.04 AND PROJECT SPECIFICATIONS.

TEMPORARY EROSION CONTROL MEASURES:

1. TEMPORARY GROUND COVER SHALL BE APPLIED WITHIN A PERIOD OF 14 CALENDAR DAYS AFTER THE SITE HAS BEEN GRADED, OR BARED OF VEGETATION, OR IF FINAL GRADING OF THE SITE WILL BE SUSPENDED FOR MORE THAN 14 CALENDAR DAYS. ALL COST FOR MAINTAINING AND REMOVING TEMPORARY EROSION CONTROL MEASURES WILL BE BORNE BY THE CONTRACTOR.
2. THE CONTRACTOR MAY USE HYDRO-MULCH TO APPLY THE TEMPORARY GROUND COVER.
3. TEMPORARY GROUND COVER SHALL CONSIST OF 2,000 LBS. PER ACRE WOOD CELLULOSE FIBER MULCH AND 65 LBS. PER ACRE TACKIFIER.

PERMANENT EROSION CONTROL MEASURES:

1. THE CONTRACTOR SHALL GRASS ALL EXPOSED AREAS THAT HAVE BEEN CONSTRUCTED TO FINAL GRADES WITHIN A PERIOD OF 30 CALENDAR DAYS. ALL COSTS FOR MAINTAINING AND WATERING PERMANENT EROSION CONTROL MEASURES WILL BE BORNE BY THE CONTRACTOR.
2. HE CONTRACTOR MAY USE HYDRO-MULCH TO APPLY THE PERMANENT GROUND COVER.
3. PERMANENT GRASS GROUND COVER SHALL CONSIST OF 100 LBS. PER ACRE BUFFELGRASS, 75 LBS. PER ACRE BERMUDA GRASS, 50 LBS. PER ACRE RYE GRASS, 6,000 LBS. PER ACRE GYPSUM BASED GEOBINDER, 2,000 LBS. PER ACRE WOOD CELLULOSE FIBER MULCH, AND 400 LBS. PER ACRE 10-30-10 FERTILIZER.
4. PERMANENT GRASS GROUND ALONG NATURAL DRAINAGEWAYS SHALL CONSIST OF 200 LBS. PER ACRE BUFFELGRASS, 100 LBS. PER ACRE BERMUDA GRASS, 50 LBS. PER ACRE RYE GRASS, 1,500 LBS. PER ACRE WOOD CELLULOSE FIBER MULCH, 400 LBS. PER ACRE 10-30-10 FERTILIZER, AND PERMANENT EROSION CONTROL / TURF REINFORCEMENT MATTING.

HISTORIC SITE & HUMAN REMAINS:

1. SHOULD HISTORIC SITES SUCH AS WALLS, PLATFORMS, PAVEMENTS AND MOUNDS, OR REMAINS SUCH AS ARTIFACTS, BURIALS, CONCENTRATION OF CHARCOAL OR SHELLS ARE ENCOUNTERED DURING CONSTRUCTION WORK, WORK SHALL CEASE IN THE IMMEDIATE VICINITY OF THE FIND AND THE FIND SHALL BE PROTECTED FROM FURTHER DAMAGE. THE CONTRACTOR SHALL IMMEDIATELY CONTACT THE STATE HISTORIC PRESERVATION DIVISION (808-692-8015), WHICH WILL ASSESS THE SIGNIFICANCE OF THE FIND AND RECOMMEND AN APPROPRIATE MITIGATION MEASURE, IF NECESSARY.
2. IF HUMAN REMAINS ARE ENCOUNTERED DURING CONSTRUCTION, ALL ACTIVITIES IN THE VICINITY OF THE FIND SHALL CEASE AND THE REMAINS SHALL BE PROTECTED FROM FURTHER DAMAGE. THE STATE HISTORIC PRESERVATION DIVISION (808-692-8015) SHALL BE NOTIFIED IMMEDIATELY TO ASSESS THE SITUATION AND DETERMINE THE APPROPRIATE MITIGATION MEASURE. CONTRACTOR SHALL BE RESPONSIBLE FOR IMPLEMENTING THE MITIGATION PLAN.

BEST MANAGEMENT PRACTICES

1. EROSION AND SEDIMENT CONTROL PRACTICES
   A. CONSTRUCTION MANAGEMENT TECHNIQUES
      - A MAXIMUM OF 8 ACRES, SHALL BE ALLOWED TO BE EXPOSED AT ONE TIME.
      - GRADING OPERATIONS SHALL BE PLANNED SO AS TO MINIMIZE TIME OF CONSTRUCTION.
      - GRADING OPERATIONS SHALL BE PLANNED SO AS TO MINIMIZE SIZE OF THE DISTURBED AREA. THE AREA GRUBBED SHALL NOT EXTEND BEYOND WHAT WILL ACTUALLY REQUIRED FOR GRADING.
      - THE PROJECT GRADING LIMITS SHALL BE STAKED PRIOR TO THE START OF CONSTRUCTION.
      - UPON COMPLETION OF GRADING ALL EXPOSED AREAS WILL BE GRASSED AS REQUIRED.
   B. STABILIZATION TECHNIQUES
      - EXISTING GROUND COVER SHALL NOT BE DESTROYED, REMOVED OR DISTURBED MORE THAN 20 CALENDAR DAYS PRIOR TO THE START OF GRADING OPERATIONS.
      - AREAS THAT REMAIN UNFINISHED FOR MORE THAN 21 CALENDAR DAYS SHALL BE HYDROMULCHED TO PROVIDE TEMPORARY SOIL STABILIZATION BY NO LATER THAN THE 14TH DAY AFTER LAST DISTURBANCE.
      - AFTER ACHIEVING FINISHED GRADES, ALL SLOPES AND EXPOSED AREAS SHALL BE PERMANENTLY STABILIZED BY HYDROMULCHING WITH GRASS SEED AS SOON AS PRACTICABLE.
   C. STRUCTURAL CONTROLS
      - SILT FENCES OR FILTER BERMS SHALL BE CONSTRUCTED ALONG THE ENTIRE DOWNSTREAM SIDE OF THE ACTIVE CONSTRUCTION ZONE IN AREAS WHERE ONSITE RUNOFF FLOWS INTO ADJOINING PROPERTIES. FILTER BAGS AND INLET PROTECTION SHALL BE PLACED AT ALL CURB-INLET CATCH BASIN OPENINGS AND GRATED INLETS TO REMOVE SILT FROM THE ONSITE RUNOFF.
   D. SCHEDULE FOR IMPLEMENTING CONTROLS
      - EROSION AND SEDIMENT CONTROL MEASURES SHALL BE IN PLACE AND FUNCTIONAL BEFORE EARTH MOVING OPERATIONS BEGIN, AND WILL BE MAINTAINED THROUGHOUT THE CONSTRUCTION PERIOD.
      - THE FOLLOWING GENERAL ORDER SHOULD BE USED:
      - INSTALLATION OF TIRE CLEANING PAD.
      - INSTALLATION OF SILT FENCE AND FILTER BERM.
      - GRADING MAY PROCEED.
2. DUST CONTROLS
   THE CONTRACTOR SHALL KEEP THE PROJECT AREA AND SURROUNDING AREAS FREE FROM DUST NUISANCE. THE FOLLOWING MITIGATIVE MEASURES WILL BE INCORPORATED:
   A. USE TEMPORARY AREA SPRINKLERS IN NON-ACTIVE CONSTRUCTION AREAS WHEN GROUND COVER IS REMOVED.
   B. CONSTRUCT DUST FENCES ALONG PROJECT SITE BOUNDARIES AFFECTED BY PREVAILING WIND DIRECTION.
   C. STATION A WATER TRUCK ON SITE AT ALL TIMES DURING CONSTRUCTION PERIOD TO PROVIDE FOR IMMEDIATE SPRINKLING, AS NEEDED, IN ACTIVE CONSTRUCTION ZONES OR WHEREVER NEEDED ON THE CONSTRUCTION SITE (WEEKENDS AND HOLIDAYS INCLUDED).
   D. GRADED AREAS SHALL BE THOROUGHLY WATERED DURING CONSTRUCTION, AFTER CONSTRUCTION ACTIVITIES HAVE CEASED FOR THE DAY AND ON WEEKENDS AND HOLIDAYS.
   E. IF THE CONTRACTOR IS NOT ABLE TO SATISFACTORILY CONTROL DUST EMISSIONS FROM THE PROJECT SITE, ALL CONSTRUCTION WORK SHALL CEASE EXCEPT FOR WATERING AND OTHER STABILIZATION EFFORTS.
   F. THE CONTRACTOR SHALL BE RESPONSIBLE FOR RESPONDING TO FUGITIVE DUST AND WATER BORNE SILT COMPLAINTS FROM NEIGHBORING PROPERTIES AND SHALL PROVIDE ADDITIONAL MITIGATION MEASURES AS NECESSARY.
3. OTHER POLLUTION CONTROL PRACTICES
   A. CONTRACTOR SHALL INSTALL DANDY BEAVER DAM OR DANDY BAG (OR APPROVED EQUAL) AT ALL NEW AND EXISTING INLETS AND DISCHARGE POINTS WHICH MAY RECEIVE RUNOFF FROM CONSTRUCTION ACTIVITY.
   B. MAINTENANCE AND FUELING OF CONSTRUCTION EQUIPMENT WILL BE PERFORMED ONLY IN DESIGNATED AREAS ENCLOSED BY A CONTAINMENT BERM CONSTRUCTED SO AS TO CONTAIN SPILLS AND PREVENT STORM WATER RUNOFF FROM CARRYING POLLUTANTS INTO STATE WATERS OR DOWNSTREAM PROPERTIES.
   C. CONCRETE TRUCK WASHING SHALL OCCUR ONLY IN DESIGNATED CONTAINMENT BERMS WITH IMPERMEABLE LINERS TO PREVENT INFILTRATION OR DISCHARGING OF POLLUTANTS DOWNSTREAM. THE COLLECTED POLLUTANTS SHALL BE DISPOSED INTO A COUNTY OR STATE APPROVED FACILITY. SEE THIS SHEET FOR DETAILS & NOTES.
4. INSPECTION AND MAINTENANCE PROCEDURES
   A. ALL CONTROL MEASURES SHALL BE INSPECTED AND REPAIRED AS NECESSARY BY THE CONTRACTOR. INSPECTIONS SHALL BE PERFORMED AT LEAST WEEKLY IN DRY PERIODS, AND WITHIN 24 HOURS AFTER ANY RAINFALL 0.5 INCHES OR GREATER OVER A 24-HOUR PERIOD. CONTROL MEASURES SHALL BE CHECKED DAILY DURING PERIODS OF PROLONGED RAINFALL. A DAILY LOG CONTAINING A RECORD OF INSPECTIONS AND REPAIRS SHALL BE MAINTAINED AND KEPT ON SITE.
   B. THE CONTRACTOR SHALL MONITOR STORM EVENTS AND SHALL REMOVE, DESTROY, REPLACE OR RELOCATE ANY BMP AS NECESSARY THAT MUST BE REMOVED, DESTROYED, REPLACED OR RELOCATED DUE TO POTENTIAL OR ACTUAL FLOODING, OR POTENTIAL DANGER OR DAMAGE TO PROJECT OR PUBLIC. THE CONTRACTOR AND/OR OWNER SHALL STILL BE LIABLE FOR ANY WATER POLLUTION VIOLATIONS THAT MAY OCCUR DUE TO THE REMOVAL OF THE BMPS, HOWEVER, FACTORS SUCH AS THE PROTECTION OF PUBLIC HEALTH AND SAFETY ARE TAKEN INTO ACCOUNT IN THE EVENT OF AN ENFORCEMENT ACTION. THE CONTRACTOR SHALL PROMPTLY REINSTALL RESPECTIVE BMPS AS REQUIRED.

OPERATION AND MAINTENANCE PLAN FOR BMPS

1. A SPECIFIC INDIVIDUAL SHALL BE DESIGNATED TO BE RESPONSIBLE FOR EROSION AND SEDIMENT CONTROLS ON THE PROJECT SITE.
2. DURING EACH INSPECTION, AT A MINIMUM, THE FOLLOWING AREAS WILL BE INSPECTED:
   A. CLEARED, GRADED, OR EXCAVATED AREAS
   B. STORMWATER CONTROLS (PERIMETER CONTROL, BASINS, INLETS, EXIT POINTS)
   C. POLLUTION PREVENTION PRACTICES
   D. MATERIAL, WASTE, OR BORROW AREAS
   E. EQUIPMENT STORAGE AND MAINTENANCE AREAS
   F. STABILIZED AREAS
3. WHEN SIGNIFICANT RAINFALL OCCURS, BMPS SHALL BE CONTINUALLY MONITORED AND MAINTAINED. CONSTRUCTION EQUIPMENT SHALL BE MOBILIZED AS NECESSARY TO INSTALL EMERGENCY CONTROL MEASURES. AFTER STORM EVENTS, BMPS SHALL BE EVALUATED AND NEW BMPS SHALL BE DEPLOYED IN AREAS OF INEFFECTIVE BMPS.
4. IRRIGATION AND MAINTENANCE OF THE PERENNIAL VEGETATION SHALL BE PROVIDED.

NOTES:

1. THIS DETAIL IS CONCEPTUAL ONLY. CONTRACTOR SHALL BE RESPONSIBLE FOR RETAINING A STRUCTURAL ENGINEER (LICENSED TO PRACTICE IN THE STATE OF HAWAII) TO DESIGN DUST FENCE AND SHALL SUBMIT STAMPED AND SIGNED DRAWINGS FOR DUST FENCE TO ENGINEER AND COUNTY OF MAUI FOR REVIEW AND APPROVAL, AND FOR SECURING ALL REQUIRED AGENCY PERMITS.
2. SEE PLAN, SHT. C18.01 FOR LOCATION AND EXTENTS.

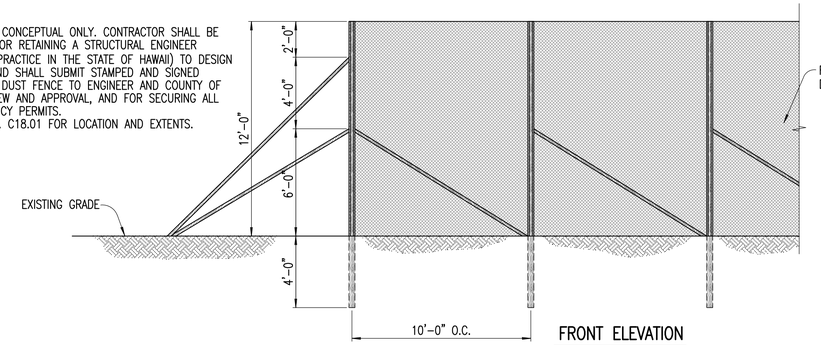

FRONT ELEVATION

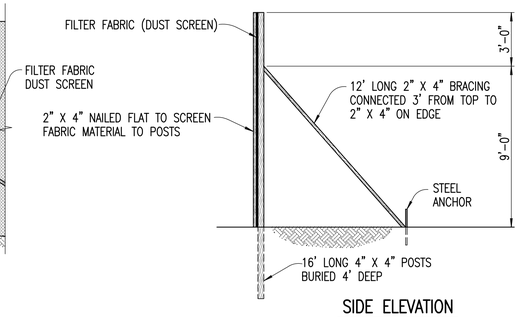

SIDE ELEVATION

DETAIL – DUST FENCE

NOT TO SCALE

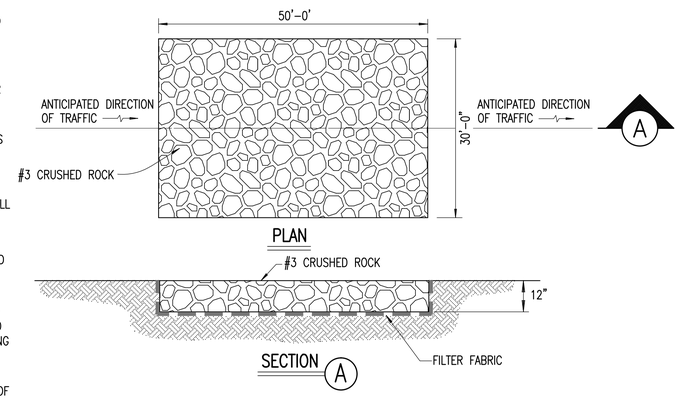

PLAN

SECTION A

DETAIL – TIRE CLEANING PAD

NOT TO SCALE

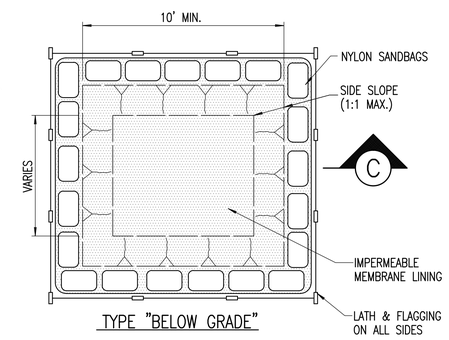

TYPE "BELOW GRADE"

CONCRETE WASH WATER MANAGEMENT

NOT TO SCALE

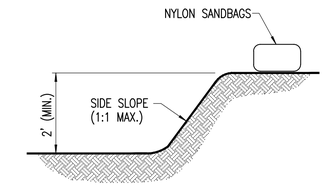

SECTION C

NOT TO SCALE

NOTES:

1. ACTUAL LAYOUT TO BE DETERMINED IN FIELD.
2. CONTRACTOR TO VERIFY LOCATION.
3. CONCRETE TRUCK WASH WATER SHALL BE DISPOSED OF OFFSITE OR IN DESIGNATED CONTAINMENT BERMS WITH IMPERMEABLE LINERS TO PREVENT INFILTRATION OR DISCHARGING OF POLLUTANTS DOWNSTREAM.

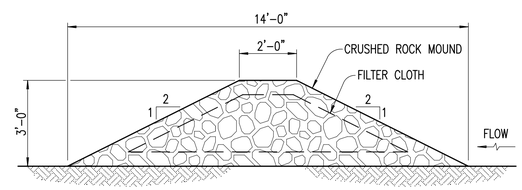

DETAIL – FILTER BERM

NOT TO SCALE

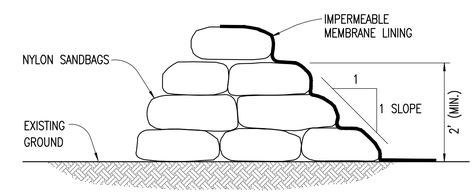

SECTION B

DETAIL – CONTAINMENT BERM

NOT TO SCALE

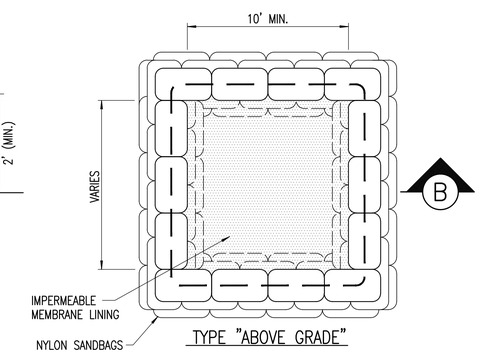

TYPE "ABOVE GRADE"

CONCRETE WASTE MANAGEMENT

NOT TO SCALE

THE EARTHWORK QUANTITIES SHOWN ARE IN PLACE VOLUME. THE CONTRACTOR SHALL VERIFY EXISTING GRADES & EARTHWORK QUANTITIES AND SHALL BE RESPONSIBLE FOR PROVIDING MATERIALS TO COMPLETE GRADING AND EMBANKMENT AS PER THE GRADING PLAN.

APPROXIMATE EARTHWORK QUANTITIES
RECREATION CENTER PHASE:

EXCAVATION: 5,700 C.Y.
EMBANKMENT: 1,500 C.Y.
NET EXCAVATION: 4,200 C.Y.
AREA OF GRASSING: 1.00± ACRE

REVISION	DESCRIPTION	DATE

CLIFFORD N. MUKAI
LICENSED PROFESSIONAL ENGINEER
NO. 6667-C
HAWAII, U.S.A.

License Expires: April 30, 2018
SIGNATURE DATE

THIS WORK WAS PREPARED BY ME OR UNDER MY SUPERVISION AND CONSTRUCTION OF THIS PROJECT WILL BE UNDER MY OBSERVATION "AS DEFINED IN SECTION 16-115-2 OF THE HAWAII ADMINISTRATIVE RULES FOR PROFESSIONAL ENGINEERS, ARCHITECTS, LAND SURVEYORS AND LANDSCAPE ARCHITECTS"

WARREN S. UNEMORI ENGINEERING, INC.
CIVIL & STRUCTURAL ENGINEERS/LAND SURVEYORS
WELLS STREET PROFESSIONAL CENTER, SUITE 403
2145 WELLS STREET, WAILUKU, MAUI, HAWAII 96793

SOUTH MAUI COMMUNITY PARK RECREATION CENTER

PROJECT NO.: P12 / 012 TAX MAP KEY: (2) 2-2-02 : 42
Waiohuli - Keokea (Kihei), Makawao, Maui, Hawaii

TITLE EROSION CONTROL DETAILS & NOTES

B.A.W. DESIGNED BY	C.N.M. CHECKED BY	03031.30 JOB NUMBER	C18.02 SHEET
D.P.T. DRAWN BY	C.N.M. APPROVED BY	Nov. 1, 2016 DATE	OF SHEETS
SCALE AS NOTED			

11-01-2016 (BID SET)

K:\Projects\03proj\03031.30 - South Maui Comm Park - Gymnasium (ADC)\dwg\conceptual\plt-ero-00.dwg

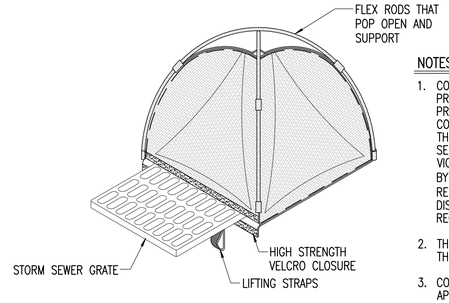

NOTES:

1. CONTRACTOR SHALL INSPECT & MAINTAIN DANDY POP INLET PROTECTION SYSTEM ON A REGULAR BASIS TO ENSURE PROPER FUNCTION TO KEEP SILT, SEDIMENT AND CONSTRUCTION DEBRIS OUT OF THE STORM WATER SYSTEM. THE CONTRACTOR SHALL REMOVE ALL ACCUMULATED SEDIMENT AND DEBRIS FROM PANELS AND SURFACE AND VICINITY OF UNIT AFTER EACH RAIN EVENT OR AS DIRECTED BY ENGINEER/INSPECTOR (FOR OIL AND SEDIMENT MODEL; REMOVE AND REPLACE ABSORBENT WHEN NEAR SATURATION). DISPOSE OF UNIT NO LONGER IN USE AT AN APPROPRIATE RECYCLING OR SOLID WASTE FACILITY.
2. THE DANDY POP INLET PROTECTION UNIT SHALL ENCLOSE THE DRAIN INLET GRATE WITH THE GEOTEXTILE FABRIC.
3. CONTRACTOR SHALL SUBMIT SHOP DRAWINGS FOR REVIEW & APPROVAL PRIOR TO ORDERING MATERIALS.

DETAIL – "DANDY POP" INLET PROTECTION SYSTEM

NOT TO SCALE

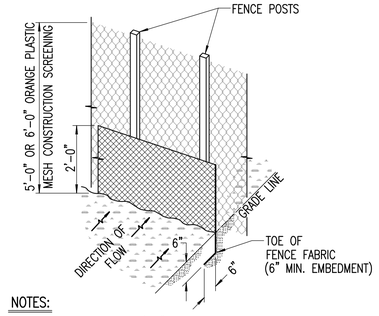

NOTES:

1. EMBED FENCE POST 1'-6" MIN.
2. SEE PLAN, SHT. C18.01 FOR LOCATION & EXTENTS

DETAIL – MODIFIED SILT FENCE

NOT TO SCALE

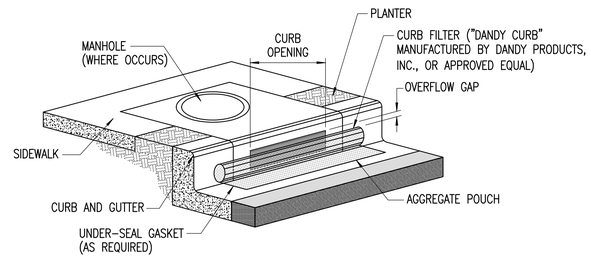

NOTES:

1.0 INSTALLATION:

1.1 PLACE DANDY CURB INLET PROTECTION UNIT ON GROUND WITH AGGREGATE POUCH ON STREET SIDE NEAR INLET IT WILL BE INSTALLED ON.
1.2 WHERE OIL AND SEDIMENT MODEL IS REQUIRED, TO INSTALL OR REPLACE ABSORBENT, PLACE ABSORBENT SOCK IN POUCH.
1.3 FILL POUCH WITH AGGREGATE SUCH AS #5-7, 8'S OR SIMILAR TO A LEVEL (AT LEAST ½ FULL) THAT WILL KEEP UNIT IN PLACE DURING A RAIN EVENT AND CREATE A SEAL BETWEEN THE DANDY CURB AND THE SURFACE OF THE STREET. RESEAL VELCRO ACCESS.
1.4 CENTER THE UNIT AGAINST CURB OR MEDIAN INLET OPENING SO THAT THE CURB SIDE OF THE UNIT CREATES A SEAL WITH THE CURB OR MEDIAN BARRIER AND INLET STRUCTURE. THERE WILL BE APPROXIMATELY TWELVE (12) INCHES OF THE INLET PROTECTION UNIT OVERHANGING ON EACH SIDE OF THE OPENING. IF THE UNIT IS NOT INSTALLED IN THIS MANNER, IT WILL NOT FUNCTION PROPERLY.

2.0 MAINTENANCE:

2.1 THE CONTRACTOR SHALL REMOVE ALL ACCUMULATED SEDIMENT AND DEBRIS FROM SURFACE AND VICINITY OF UNIT AFTER EACH RAIN EVENT OR AS DIRECTED BY ENGINEER. THE CONTRACTOR SHALL DISPOSE OF UNIT NO LONGER IN USE AT AN APPROPRIATE RECYCLING OR SOLID WASTE FACILITY.
2.2 WHERE OIL AND SEDIMENT MODEL IS REQUIRED, REMOVE AND REPLACE ABSORBENT WHEN NEAR SATURATION.

3.0 ALTERNATIVE CURB INLET PROTECTION WILL BE SUBJECT TO REVIEW AND APPROVAL BY COUNTY AND ENGINEER.

DETAIL – CURB INLET PROTECTION

NOT TO SCALE

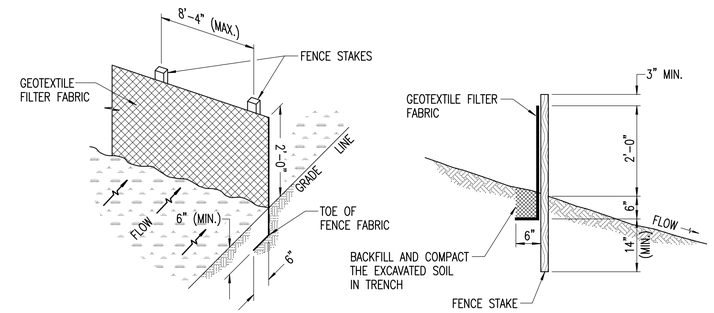

DETAIL – SILT FENCE

NOT TO SCALE

ADDITIONAL NOTE:

CONTRACTOR SHALL FOLLOW "CONSTRUCTION BMP FIELD MANUAL," JANUARY 2008, STATE OF HAWAII DEPARTMENT OF TRANSPORTATION.

REVISION	DESCRIPTION	DATE

CLIFFORD N. MUKAI
LICENSED PROFESSIONAL ENGINEER
NO. 6667-C
HAWAII, U.S.A.

License Expires: April 30, 2018

SIGNATURE DATE

THIS WORK WAS PREPARED BY ME OR UNDER MY SUPERVISION AND CONSTRUCTION OF THIS PROJECT WILL BE UNDER MY OBSERVATION "AS DEFINED IN SECTION 16-115-2 OF THE HAWAII ADMINISTRATIVE RULES FOR PROFESSIONAL ENGINEERS, ARCHITECTS, LAND SURVEYORS AND LANDSCAPE ARCHITECTS"

WARREN S. UNEMORI ENGINEERING, INC.
CIVIL & STRUCTURAL ENGINEERS/LAND SURVEYORS
WELLS STREET PROFESSIONAL CENTER, SUITE 403
2145 WELLS STREET, WAILUKU, MAUI, HAWAII 96793

SOUTH MAUI COMMUNITY PARK RECREATION CENTER

PROJECT NO.: P12 / 012 TAX MAP KEY: (2) 2-2-02 : 42
Waiohuli - Keokea (Kihei), Makawao, Maui, Hawaii

TITLE EROSION CONTROL DETAILS & NOTES

B.A.W. DESIGNED BY	C.N.M. CHECKED BY	03031.30 JOB NUMBER	C18.03 SHEET
D.P.T. DRAWN BY	C.N.M. APPROVED BY	Nov. 1, 2016 DATE	OF SHEETS
SCALE AS NOTED			

11-01-2016 (BID SET)

V:\Projects\03proj\03031.30 - South Maui Comm Park - Gymnasium (AOC)\dwg\contracts\det-ero-00.dwg

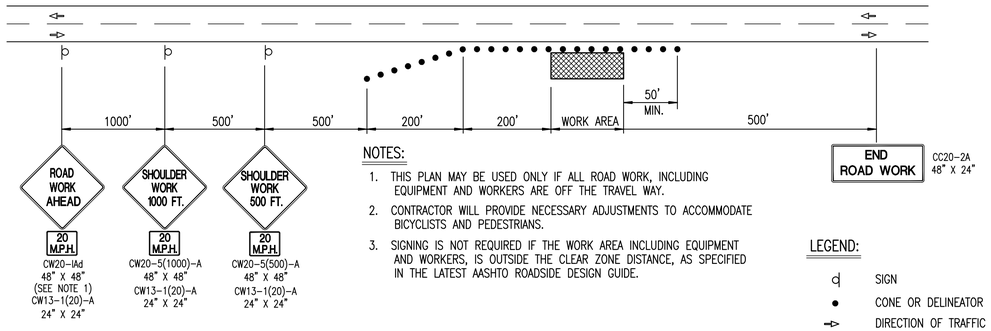

NOTES:

1. THIS PLAN MAY BE USED ONLY IF ALL ROAD WORK, INCLUDING EQUIPMENT AND WORKERS ARE OFF THE TRAVEL WAY.
2. CONTRACTOR WILL PROVIDE NECESSARY ADJUSTMENTS TO ACCOMMODATE BICYCLISTS AND PEDESTRIANS.
3. SIGNING IS NOT REQUIRED IF THE WORK AREA INCLUDING EQUIPMENT AND WORKERS, IS OUTSIDE THE CLEAR ZONE DISTANCE, AS SPECIFIED IN THE LATEST AASHTO ROADSIDE DESIGN GUIDE.

LEGEND:

- SIGN
- CONE OR DELINEATOR
- DIRECTION OF TRAFFIC

NOTES:

1. CW20-1Ad SIGN REQUIRED FOR POSTED SPEED LIMIT OF 45 M.P.H. OR GREATER.
2. SEE TABLE 1 FOR ADDITIONAL DIMENSIONS.
3. ONE LANE ROAD (CW20-4) AND FLAGGER AHEAD (CW20-7) SIGNS SHALL BE REMOVED OR COVERED WHEN NO WORK IS BEING PERFORMED AND LANE IS NOT CLOSED.
4. THE ADVISORY SPEED SHALL BE 20 MPH.
5. CONES OR DELINEATORS SHALL BE INSTALLED AT 25' O.C. MAX. ON TAPERS.

WORK ON SHOULDER OR ROADSIDE

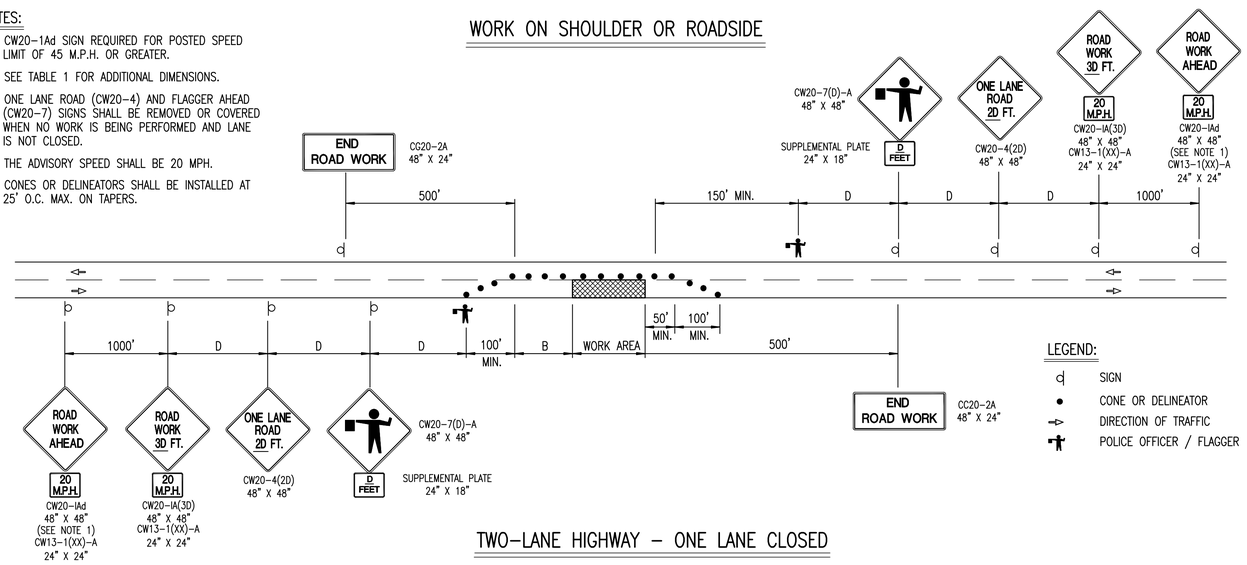

LEGEND:

- SIGN
- CONE OR DELINEATOR
- DIRECTION OF TRAFFIC
- POLICE OFFICER / FLAGGER

TWO-LANE HIGHWAY - ONE LANE CLOSED

FIGURE 1 - TRAFFIC CONTROL PLAN

GENERAL NOTES FOR TRAFFIC CONTROL PLAN

1. THE PERMITEE SHALL MAKE MINOR ADJUSTMENTS AT INTERSECTIONS, DRIVEWAYS, BRIDGES, STRUCTURES, ETC., TO FIT FIELD CONDITIONS.
2. CONES OR DELINEATORS SHALL BE EXTENDED TO A POINT WHERE THEY ARE VISIBLE TO APPROACHING TRAFFIC.
3. TRAFFIC CONTROL DEVICES SHALL BE INSTALLED SUCH THAT THE SIGN OR DEVICE FARTHEST FROM THE WORK AREA SHALL BE PLACED FIRST. THE OTHERS SHALL THEN BE PLACED PROGRESSIVELY TOWARD THE WORK AREA.
4. REGULATORY AND WARNING SIGNS WITHIN THE CONSTRUCTION ZONE THAT ARE IN CONFLICT WITH THE TRAFFIC CONTROL PLANS SHALL BE REMOVED OR COVERED. ALL SIGNS SHALL BE RESTORED UPON COMPLETION OF WORK.
5. FLAGGERS AND/OR POLICE OFFICERS SHALL BE IN SIGHT OF EACH OTHER OR IN DIRECT COMMUNICATION AT ALL TIMES.
6. WHEN REQUIRED BY THE ISSUING OFFICE, THE PERMITEE SHALL INSTALL A FLASHING ARROW SIGNAL AS SHOWN ON THE TRAFFIC CONTROL PLANS.
7. ALL TRAFFIC LANES SHALL BE A MINIMUM OF 10 FEET WIDE.
8. ALL CONSTRUCTION WARNING SIGNS SHALL BE PROMPTLY REMOVED OR COVERED WHENEVER THE MESSAGE IS NOT APPLICABLE OR NOT IN USE.
9. THE BACKS OF ALL SIGNS USED FOR TRAFFIC CONTROL SHALL BE APPROPRIATELY COVERED TO PRECLUDE THE DISPLAY OF INAPPLICABLE SIGN MESSAGES (I.E., WHEN SIGNS HAVE MESSAGES ON BOTH FACES).
10. AT THE END OF EACH DAY'S WORK, OR AS SOON AS THE WORK IS COMPLETED, THE PERMITEE SHALL REMOVE ALL TRAFFIC CONTROL DEVICES NO LONGER NEEDED TO PERMIT FREE AND SAFE PASSAGE OF PUBLIC TRAFFIC. REMOVAL SHALL BE IN THE REVERSE ORDER OF INSTALLATION. REPLACE EXISTING FADED OR OBLITERATED PAVEMENT MARKINGS THAT ARE NECESSARY FOR SAFE TRAFFIC FLOW IN THE CONSTRUCTION AREA WITH TEMPORARY OR PERMANENT MARKINGS BEFORE OPENING THE ROADWAY TO PUBLIC TRAFFIC EACH DAY.
11. REPLACE PERMANENT PAVEMENT MARKINGS AND TRAFFIC SIGNS UPON COMPLETION OF EACH PHASE OF WORK.
12. THE CONTRACTOR SHALL CONTROL TRAFFIC IN AND OUT OF DRIVEWAYS.
13. SIGN SPACING (L), TAPER LENGTHS (T) AND SPACING OF CONES OR DELINEATORS SHALL BE AS SHOWN ON TABLE 1 ON THIS SHEET. POSTED SPEED LIMIT FOR LILOA DRIVE AND HALEKUAI STREET IS 20 MPH.
14. CONTRACTOR'S SITE SPECIFIC TRAFFIC CONTROL PLAN SHALL COMPLY WITH CURRENT MUTCD AND HAWAII STANDARD SPECIFICATIONS FOR ROAD AND BRIDGE CONSTRUCTION REQUIREMENTS AND SHALL BE SATISFACTORY TO THE STATE AND/OR COUNTY.

TABLE 1 FOR TRAFFIC CONTROL PLAN

POSTED SPEED LIMIT (1) (M.P.H)	SIGN SPACING (L) (FEET)	TAPER LENGTH (T) (FEET)		LONGITUDINAL BUFFER SPACE (B) (FEET)	SPACING OF CONES OR DELINEATORS (FEET) (3)		
		W = 12' OR LESS (2)	W = GREATER THAN 12' (2)		TAPER	TANGENT	WORK AREA
20	250	200	W x 17	35	20	20	10
25	250	200	W x 17	55	25	25	10
30	250	250	W x 20	85	30	30	10
35	250	250	W x 20	120	35	35	10
40	500	350	W x 30	170	40	40	10
45	500	550	W x 45	220	45	45	10
50	1000	600	W x 50	280	50	50	10
55	1000	700	W x 55	335	55	55	10

NOTE:

(1) USE ADVISORY SPEEDS WHEN POSTED.

(2) W = WIDTH OF LANE, SHOULDER, OR OFFSET.

(3) NOT APPLICABLE FOR TWO-LANE HIGHWAYS.

TYPICAL TRAFFIC CONTROL PLAN WITHIN COUNTY RIGHT-OF-WAY

NOT TO SCALE

REVISION	DESCRIPTION	DATE

CLIFFORD N. MUKAI
LICENSED PROFESSIONAL ENGINEER
NO. 6667-C
HAWAII, U.S.A.

License Expires: April 30, 2018

SIGNATURE DATE

THIS WORK WAS PREPARED BY ME OR UNDER MY SUPERVISION AND CONSTRUCTION OF THIS PROJECT WILL BE UNDER MY OBSERVATION "AS DEFINED IN SECTION 16-115-2 OF THE HAWAII ADMINISTRATIVE RULES FOR PROFESSIONAL ENGINEERS, ARCHITECTS, LAND SURVEYORS AND LANDSCAPE ARCHITECTS"

WARREN S. UNEMORI ENGINEERING, INC.
CIVIL & STRUCTURAL ENGINEERS/LAND SURVEYORS
WELLS STREET PROFESSIONAL CENTER, SUITE 403
2145 WELLS STREET, WAILUKU, MAUI, HAWAII 96793

SOUTH MAUI COMMUNITY PARK RECREATION CENTER

PROJECT NO.: P12 / 012 TAX MAP KEY: (2) 2-2-02 : 42
Waiohuli - Keokea (Kihei), Makawao, Maui, Hawaii

TITLE TRAFFIC CONTROL PLAN

B.A.W. DESIGNED BY	C.N.M. CHECKED BY	03031.30 JOB NUMBER	C19.01 SHEET
D.P.T. DRAWN BY	C.N.M. APPROVED BY	Nov. 1, 2016 DATE	OF SHEETS
AS NOTED SCALE			

11-01-2016 (BID SET)

V:\Projects\03proj\03031.30 - South Maui Comm Park - Gymnasium (AOC)\dwg\conplans\traf-cont0.dwg

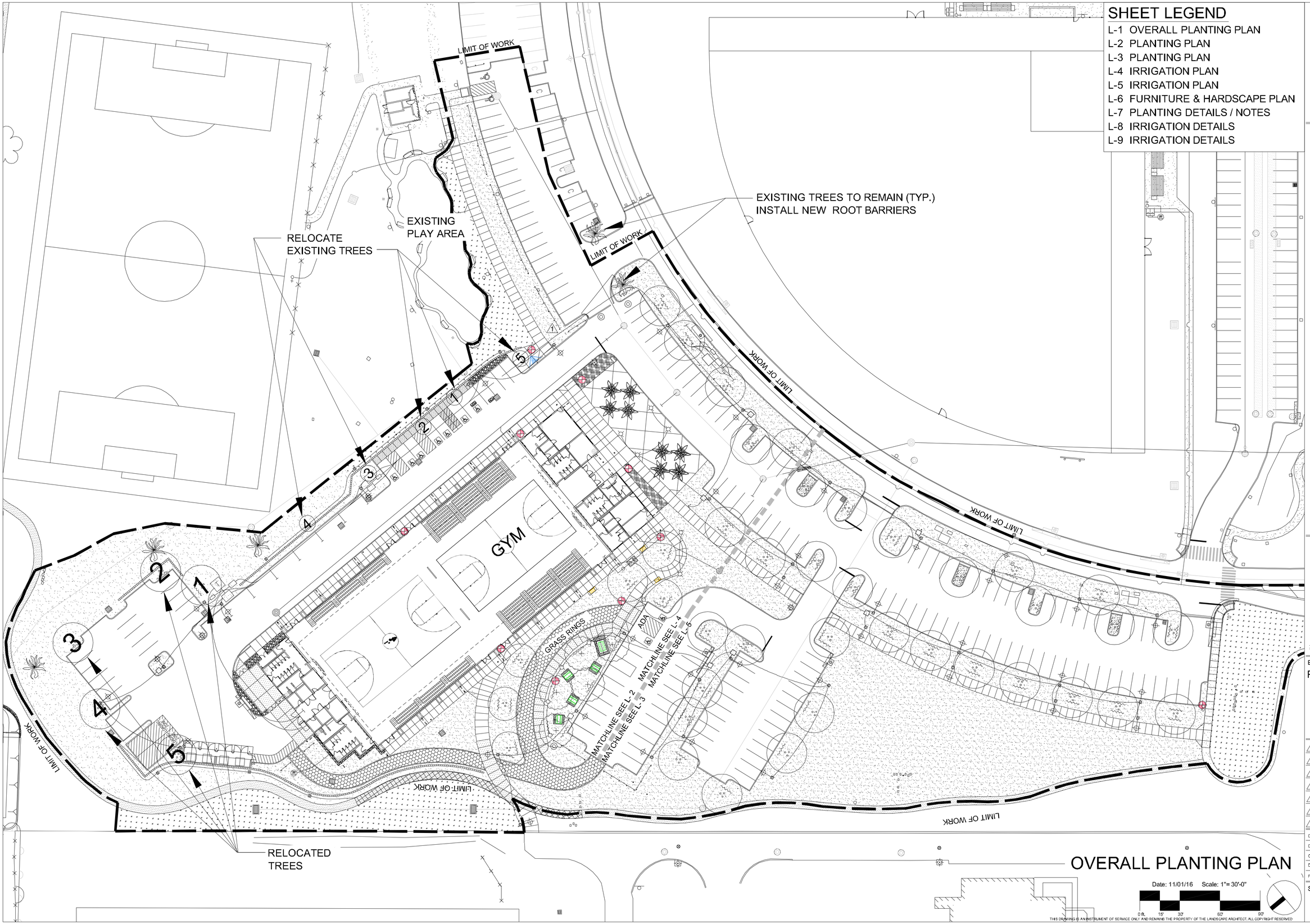

SHEET LEGEND

L-1 OVERALL PLANTING PLAN
L-2 PLANTING PLAN
L-3 PLANTING PLAN
L-4 IRRIGATION PLAN
L-5 IRRIGATION PLAN
L-6 FURNITURE & HARDSCAPE PLAN
L-7 PLANTING DETAILS / NOTES
L-8 IRRIGATION DETAILS
L-9 IRRIGATION DETAILS

HAWAII LAND DESIGN
LANDSCAPE ARCHITECTS
LAND PLANNERS, LLC
2331 W. MAIN STREET
WAILUKU, MAUI, HI 96793
TELEPHONE: (808) 249-2803
FACSIMILE: (808) 249-2804

SOUTH MAUI GYM COMMUNITY PARK

LILOA DRIVE KIHEI, HAWAII 96756

TMK: (2) 02-02-024: 03

WILLIAM MITCHELL
LICENSED PROFESSIONAL LANDSCAPE ARCHITECT
No. 9173
HAWAII, U.S.A.

THIS WORK WAS PREPARED BY ME OR UNDER MY DIRECT SUPERVISION AND CONSTRUCTION OF THIS PROJECT WILL BE UNDER MY SUPERVISION

Signature Expires 04-30-16

BID SET

PLANTING PLAN

Designed by	WM
Drawn by	SY
Checked by	WM
Date	01/26/16
File No.	12-042

SHEET

L-1

1 of 9 sheets

OVERALL PLANTING PLAN

Date: 11/01/16 Scale: 1"= 30'-0"

0 ft. 15' 30' 60' 90'

THIS DRAWING IS AN INSTRUMENT OF SERVICE ONLY AND REMAINS THE PROPERTY OF THE LANDSCAPE ARCHITECT. ALL COPYRIGHT RESERVED

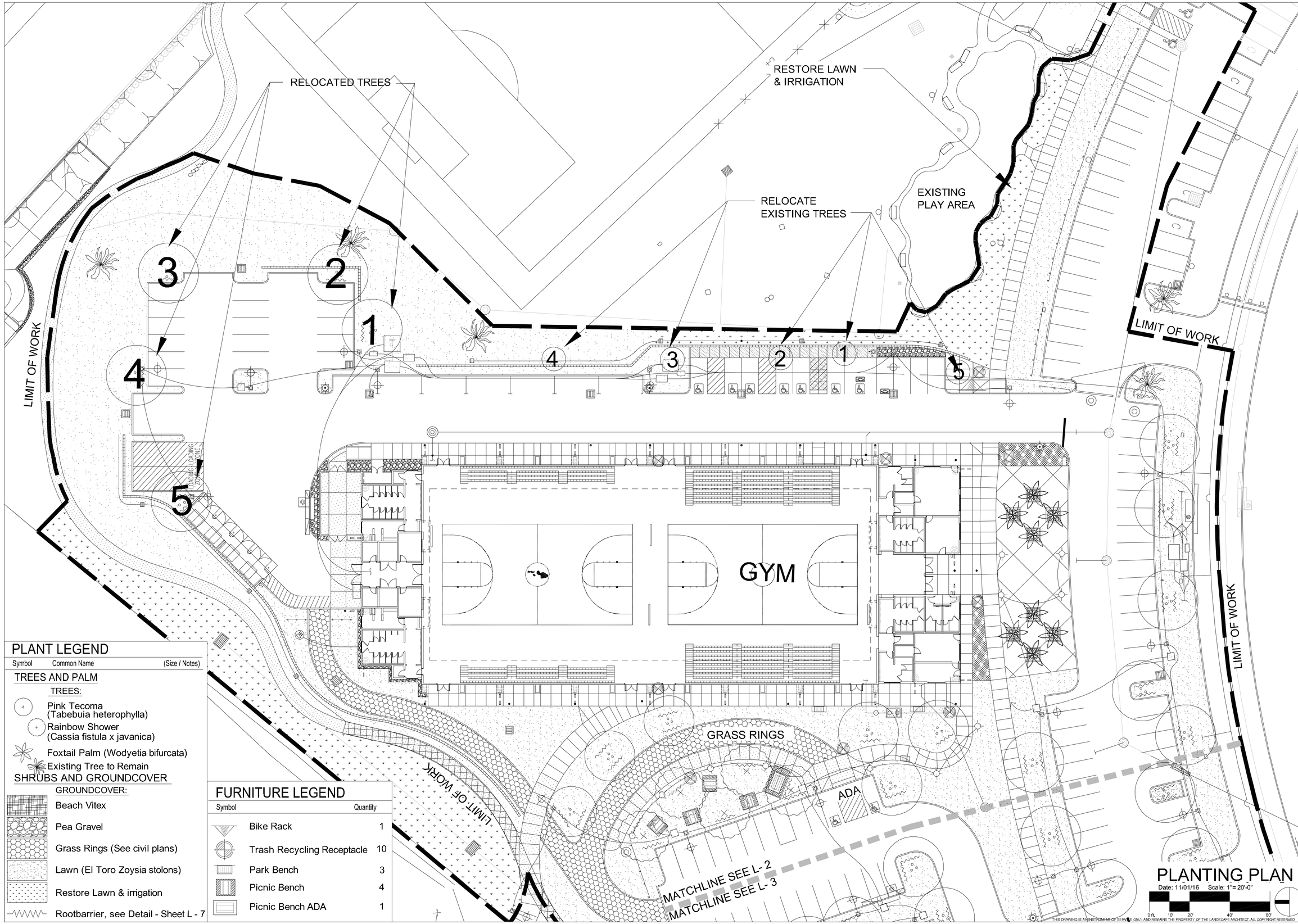

PLANT LEGEND

Symbol	Common Name	(Size / Notes)
TREES AND PALM		
	TREES:	
	Pink Tecoma (Tabebuia heterophylla)	
	Rainbow Shower (Cassia fistula x javanica)	
	Foxtail Palm (Wodyetia bifurcata)	
	Existing Tree to Remain	
SHRUBS AND GROUNDCOVER		
	GROUNDCOVER:	
	Beach Vitex	
	Pea Gravel	
	Grass Rings (See civil plans)	
	Lawn (El Toro Zoysia stolons)	
	Restore Lawn & irrigation	
	Rootbarrier, see Detail - Sheet L - 7	

FURNITURE LEGEND

Symbol		Quantity
	Bike Rack	1
	Trash Recycling Receptacle	10
	Park Bench	3
	Picnic Bench	4
	Picnic Bench ADA	1

PLANTING PLAN

Date: 11/01/16 Scale: 1"= 20'-0"

0 ft. 10' 20' 40' 60'

THIS DRAWING IS AN INSTRUMENT OF SERVICE ONLY AND REMAINS THE PROPERTY OF THE LANDSCAPE ARCHITECT. ALL COPYRIGHT RESERVED

HAWAII LAND DESIGN
LANDSCAPE ARCHITECTS
LAND PLANNERS, LLC
2331 W. MAIN STREET
WAILUKU, MAUI, HI 96793
TELEPHONE: (808) 249-2803
FACSIMILE: (808) 249-2804

SOUTH MAUI GYM COMMUNITY PARK

LILOA DRIVE KIHEI, HAWAII 96756

TMK: (2) 02-02-024: 03

WILLIAM MITCHELL
LICENSED PROFESSIONAL LANDSCAPE ARCHITECT
No. 9173
HAWAII, U.S.A.

THIS WORK WAS PREPARED BY ME OR UNDER MY DIRECT SUPERVISION AND CONSTRUCTION OF THIS PROJECT WILL BE UNDER MY SUPERVISION

Signature Expires 04-30-18

BID SET

PLANTING PLAN

Designed by	WM
Drawn by	SY
Checked by	WM
Date	01/26/16
File No.	12-042

SHEET L-2

2 of 9 sheets

PLANT LEGEND

Symbol	Common Name	(Size / Notes)

TREES AND PALM

TREES:

- Pink Tecoma (Tabebuia heterophylla)
- Rainbow Shower (Cassia fistula x javanica)
- Foxtail Palm (Wodyetia bifurcata)
- Existing Tree to Remain

SHRUBS AND GROUNDCOVER

GROUNDCOVER:

- Beach Vitex
- Pea Gravel
- Grass Rings (See civil plans)
- Lawn (El Toro Zoysia stolons)
- Restore Lawn & irrigation
- Rootbarrier, see Detail - Sheet L - 7

HAWAII LAND DESIGN
LANDSCAPE ARCHITECTS
LAND PLANNERS, LLC
2331 W. MAIN STREET
WAILUKU, MAUI, HI 96793
TELEPHONE: (808) 249-2803
FACSIMILE: (808) 249-2804

SOUTH MAUI GYM COMMUNITY PARK

LILOA DRIVE KIHEI, HAWAII 96756

TMK: (2) 02-02-024: 03

WILLIAM MITCHELL
LICENSED PROFESSIONAL LANDSCAPE ARCHITECT No. 9173
HAWAII, U.S.A.

THIS WORK WAS PREPARED BY ME OR UNDER MY DIRECT SUPERVISION AND CONSTRUCTION OF THIS PROJECT WILL BE UNDER MY SUPERVISION

Signature Expires 04-30-18

BID SET

PLANTING PLAN

1.
2.
3.
4.
5.
6.
7.

Designed by	WM
Drawn by	SY
Checked by	WM
Date	01/26/16
File No.	12-042

SHEET

L-3

3 of 9 sheets

PLANTING PLAN

Date: 11/01/16 Scale: 1"= 20'-0"

0 ft. 10' 20' 40' 60'

THIS DRAWING IS AN INSTRUMENT OF SERVICE ONLY AND REMAINS THE PROPERTY OF THE LANDSCAPE ARCHITECT. ALL COPYRIGHT RESERVED

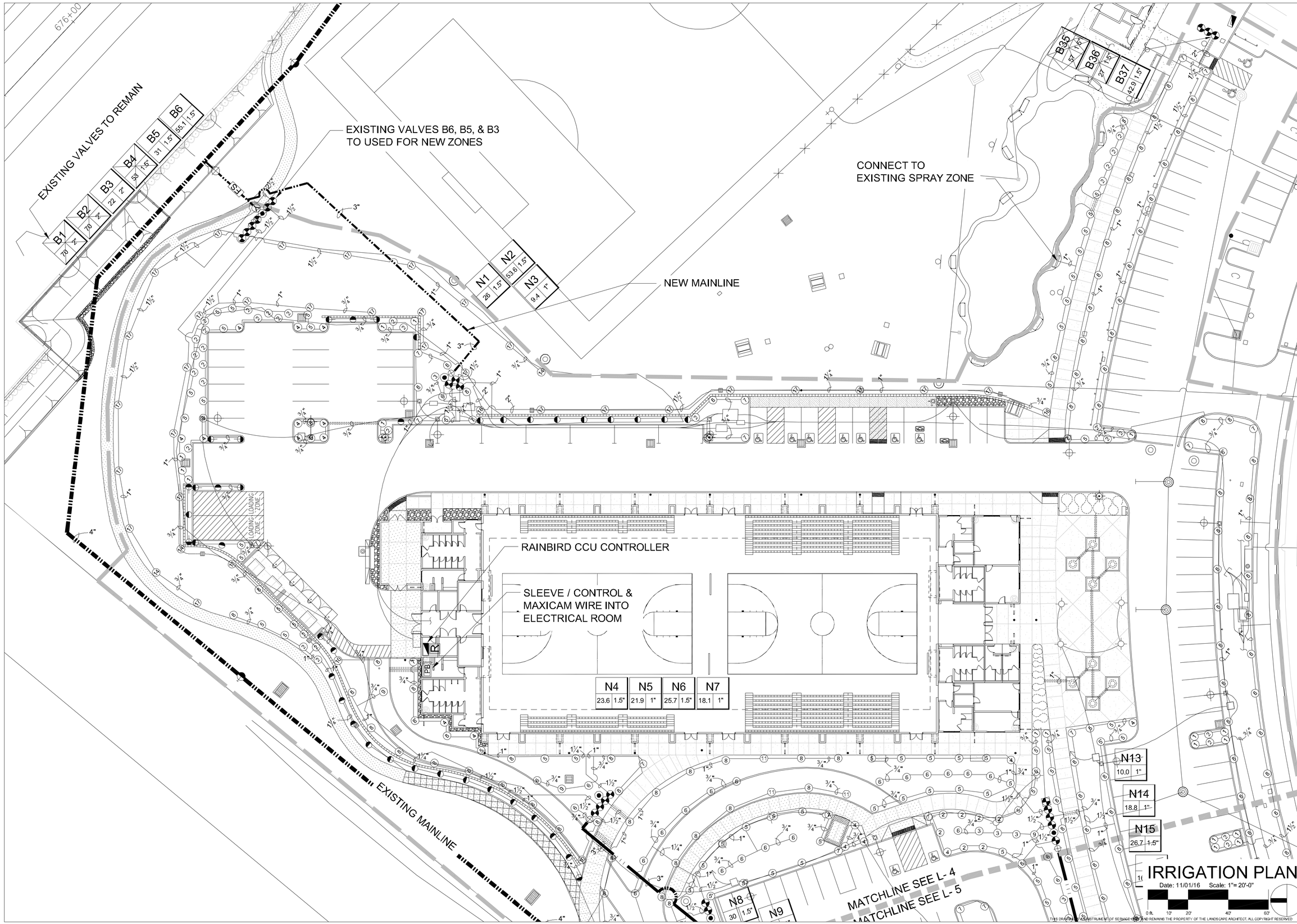

IRRIGATION PLAN

Date: 11/01/16 Scale: 1"= 20'-0"

0 ft. 10' 20' 40' 80'

THIS DRAWING AND INSTRUMENT OF SERVICE IS AND REMAINS THE PROPERTY OF THE LANDSCAPE ARCHITECT, ALL COPYRIGHT RESERVED

HAWAII LAND DESIGN
LANDSCAPE ARCHITECTS
LAND PLANNERS, LLC
2331 W. MAIN STREET
WAILUKU, MAUI, HI 96793
TELEPHONE: (808) 249-2803
FACSIMILE: (808) 249-2804

SOUTH MAUI GYM COMMUNITY PARK

LILOA DRIVE KIHEI, HAWAII 96756

TMK: (2) 02-02-024: 03

WILLIAM MITCHELL
LICENSED PROFESSIONAL LANDSCAPE ARCHITECT
No. 9173
HAWAII, U.S.A.

THIS WORK WAS PREPARED BY ME OR UNDER MY DIRECT SUPERVISION AND CONSTRUCTION OF THIS PROJECT WILL BE UNDER MY SUPERVISION

Signature Expires 04-30-18

PERMIT SET

IRRIGATION PLAN

Scale: 1"= 20'-0"

1
2
3
4
5
6
7

Designed by	WM
Drawn by	SY
Checked by	WM
Date	08/14/16
File No.	12-042

SHEET

L-4

4 of 9 sheets

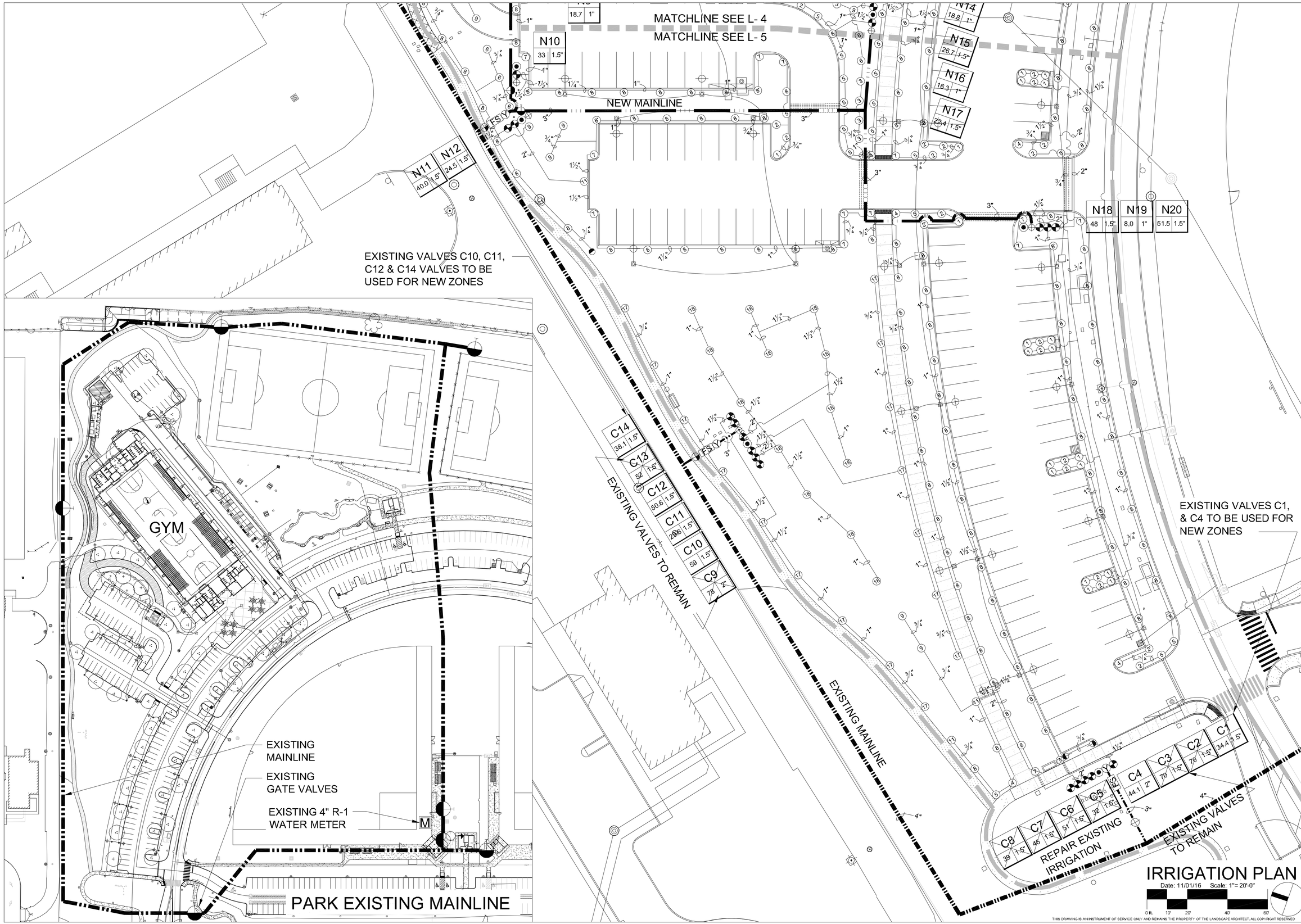

THIS DRAWING IS AN INSTRUMENT OF SERVICE ONLY AND REMAINS THE PROPERTY OF THE LANDSCAPE ARCHITECT. ALL COPYRIGHT RESERVED

HAWAII LAND DESIGN
LANDSCAPE ARCHITECTS
LAND PLANNERS, LLC
2331 W. MAIN STREET
WAILUKU, MAUI, HI 96793
TELEPHONE: (808) 249-2803
FACSIMILE: (808) 249-2804

SOUTH MAUI GYM COMMUNITY PARK

LILOA DRIVE KIHEI, HAWAII 96756

TMK: (2) 02-02-024: 03

WILLIAM MITCHELL
LICENSED PROFESSIONAL LANDSCAPE ARCHITECT No. 9173
HAWAII, U.S.A.

THIS WORK WAS PREPARED BY ME OR UNDER MY DIRECT SUPERVISION AND CONSTRUCTION OF THIS PROJECT WILL BE UNDER MY SUPERVISION

Signature Expires 04-30-18

BID SET

IRRIGATION PLAN

Scale: 1"= 20'-0"

Designed by	WM
Drawn by	SY
Checked by	WM
Date	06/14/16
File No.	12-042

SHEET

L-5

5 of 9 sheets

GRASS RINGS

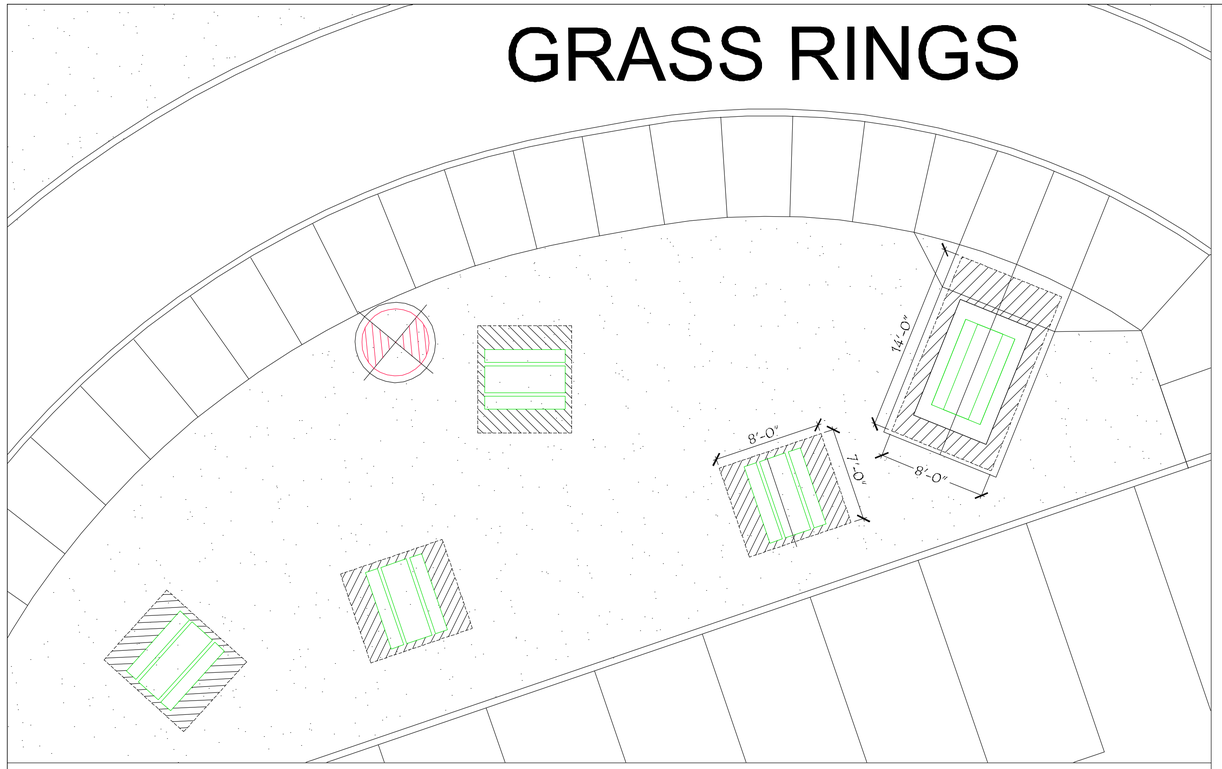

E CONCRETE PICNIC TABLE PLAN VIEW

SCALE: N.T.S.

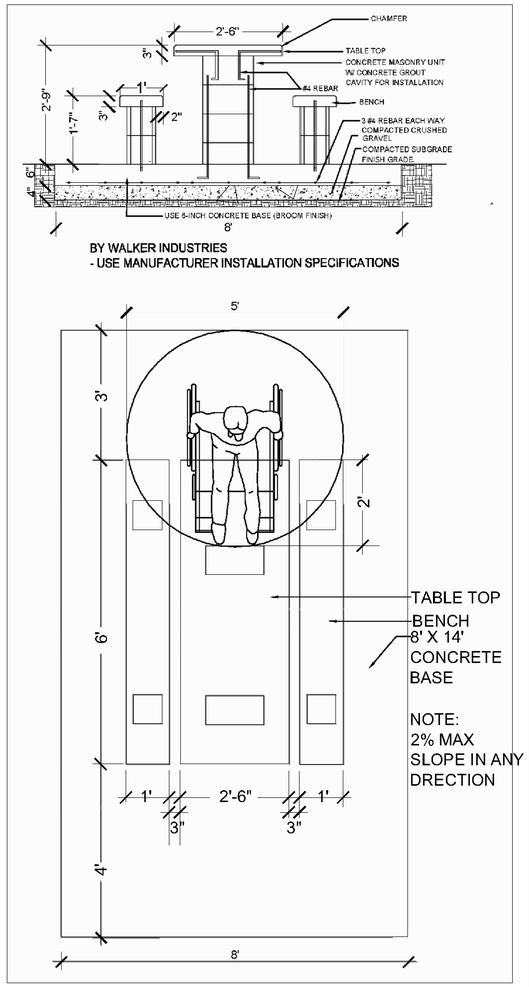

BY WALKER INDUSTRIES
- USE MANUFACTURER INSTALLATION SPECIFICATIONS

D CONCRETE ADA PICNIC TABLE

PLAN / SECTION

SCALE: N.T.S.

FURNITURE LEGEND

Symbol	Quantity
Bike Rack	1
Trash Recycling Receptacle	10
Park Bench	3
Picnic Bench	4
Picnic Bench ADA	1

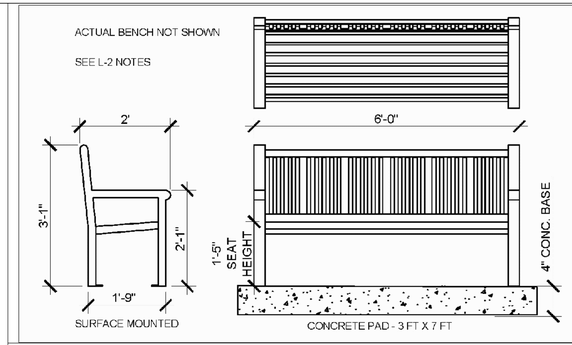

A TYPICAL BENCH WITH BACK - 6 FEETS

SECTION

SCALE: N.T.S.

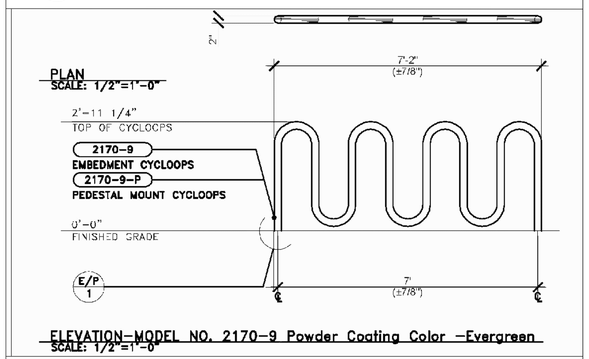

B BIKE RACK DETAIL

SECTION

SCALE: N.T.S.

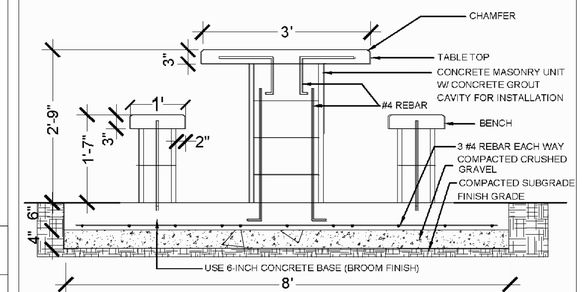

BY WALKER INDUSTRIES
- USE MANUFACTURER INSTALLATION SPECIFICATIONS

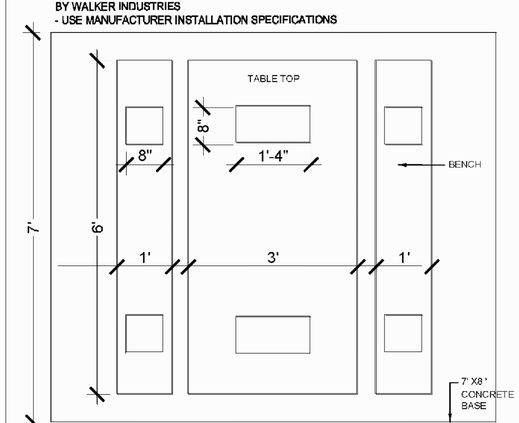

C CONCRETE PICNIC TABLE

PLAN / SECTION

SCALE: N.T.S.

FURNITURE & HARDSCAPE DETAILS

THIS DRAWING IS AN INSTRUMENT OF SERVICE ONLY AND REMAINS THE PROPERTY OF THE LANDSCAPE ARCHITECT. ALL COPYRIGHT RESERVED

HAWAII LAND DESIGN
LANDSCAPE ARCHITECTS
LAND PLANNERS, LLC
2331 W. MAIN STREET
WAILUKU, MAUI, HI 96793
TELEPHONE: (808) 249-2803
FACSIMILE: (808) 249-2804

SOUTH MAUI GYM COMMUNITY PARK

LILOA DRIVE KIHEI, HAWAII 96756

TMK: (2) 02-02-024: 03

WILLIAM MITCHELL
LICENSED PROFESSIONAL LANDSCAPE ARCHITECT No. 9173
HAWAII, U.S.A.

THIS WORK WAS PREPARED BY ME OR UNDER MY DIRECT SUPERVISION AND CONSTRUCTION OF THIS PROJECT WILL BE UNDER MY SUPERVISION

Signature Expires 04-30-16

BID SET
FURNITURE & HARDSCAPE DETAILS

DATE: 11/01/2016

1
2
3
4
5
6
7

Designed by	WM
Drawn by	SY
Checked by	WM
Date	02/25/16
File No.	12-042

SHEET
L-6

6 of 9 sheets

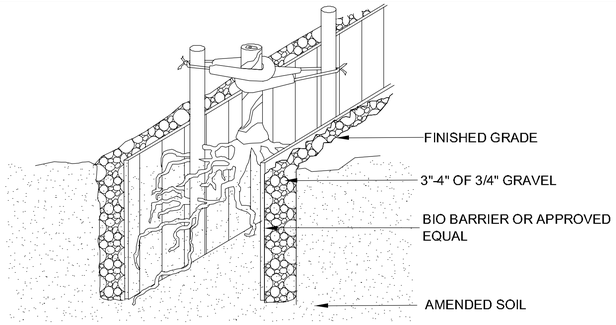

G ROOT BARRIER
SECTION SCALE: N.T.S.

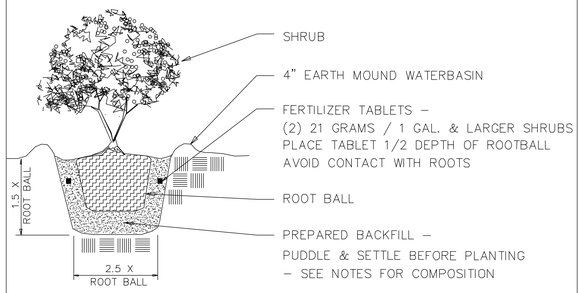

C SHRUB PLANTING DETAIL
SECTION SCALE: N.T.S.

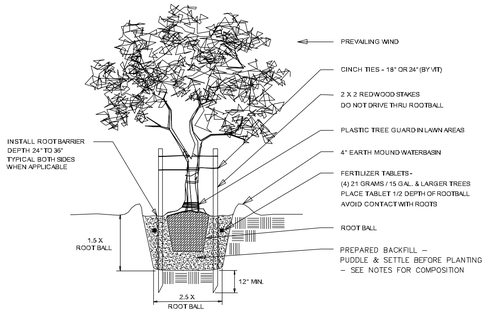

A TREE PLANTING DETAIL
SECTION SCALE: N.T.S.

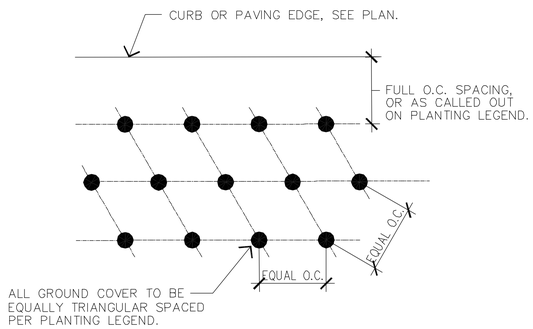

D GROUND COVER SPACING
SECTION SCALE: N.T.S.

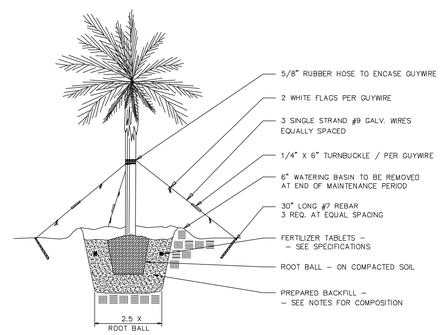

B PALM PLANTING DETAIL
SECTION SCALE: N.T.S.

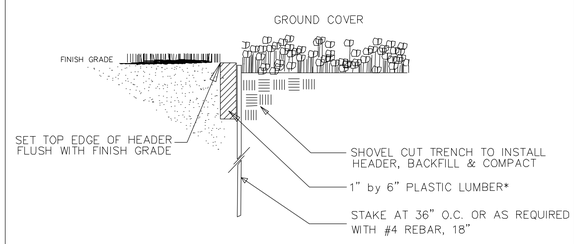

E HEADER DETAIL
SECTION SCALE: N.T.S.

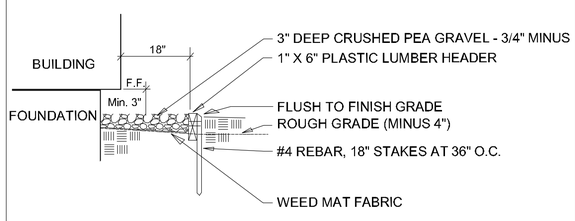

F MAINTENANCE STRIP DETAIL
SECTION SCALE: N.T.S.

GENERAL NOTES

GRADING

1. Landscape Contractor shall maintain a minimum 1% drainage away from all buildings and finish grades shall be smoothed to eliminate ponding or standing water. Fine grade all planting areas prior to commencement of planting operation. The Landscape Contractor shall coordinate with all trades and maintain drainage during construction.
2. Rough grade (i.e. finish grade less 4") to be provided by others in landscape areas.
3. Place Jute Mesh over slope areas 2:1 or greater.

SOIL PREPARATION

1. Evenly spread 4" layer (after settlement) of imported Amended Cinder Topsoil Mix topsoil over all planting areas, unless otherwise specified.
2. Pre-mix AMENDED CINDER TOPSOIL MIX as follows:
   1/3 screened Topsoil: 1/3 Cinder (3/8" minus): 1/3 Organic Compost
3. Uniformly distribute 10-30-10 fertilizer at a rate of 10 lbs. per 1000 sq. ft.

PLANTING:

1. Plant quantities shown in the legend are for the Contractor's reference only. The Contractor shall verify all quantities before bidding. The Contractor is responsible for providing sufficient material to cover all areas shown on the plans.
2. Plant materials shall be in quantities and sizes specified and be spotted approximately as shown on the plans after the site is graded. The Landscape Architect shall approve these locations before plants are removed from containers and any excavation for plant pits begin.
3. Plant material is subject to change by Landscape Architect or Owner based on availability, functional and aesthetic considerations.
4. Contractor shall obtain Landscape Architect's approval prior to any substitutions for material specified on the plans.
5. Contractor shall layout lawn areas for Landscape Architect's approval prior to any installation of planting or irrigation.
6. Shrubs and trees shall have ground cover planted under them as shown by adjacent symbol. Areas not receiving ground cover shall have mulch evenly under shrubs as called for in the materials legend.
7. Ground cover shall be planted using triangular spacing.
8. Vines and espaliers shall be secured to adjacent fences, posts or walls using vine ties. Remove nursery stakes or trellis.
9. Contractor shall guarantee plant longevity as follows: Trees one year; Shrubs and Ground covers for three months. This period to begin at the end of the maintenance period and after final acceptance.
10. All planted and irrigated areas shall be subject to a ninety (90) day maintenance period. Formal maintenance period shall begin when installation is approved by Landscape Architect.
11. Root barriers as shown on plans shall be installed as per the manufacturer's specifications.
12. Contractor shall be aware of all new utility locations prior to excavation. See Civil, Mechanical and Electrical drawings.
13. Large specimen trees and palms shall be guyed as required for healthy plant establishment.
14. Refer to Landscape Specifications for additional information regarding material and installation requirements.

PLANT & MATERIAL QUANTITIES

Botanical Name / Item	Common Name / Company	Size	Quantity Total	
TREES			**EA.**	
Tabebuia heterophylla	Pink Tecoma	25 Gal., 6'-0" trunk ht., 2" cal.	53	
Cassia fistula x javanica	Rainbow shower tree	25 Gal., 6'-0" trunk ht., 2" cal.	3	
Wodyetia bifurcata	Foxtail Palm	F.S. 7' - 8' Trunk ht.	8	
GROUND COVERS			**S.F.**	
Vitex rotundifolia	Beach Vitex	4" pots - 12"O.C.	662	
Zoysia japonica 'el toro'	Zoysia Grass 'el toro'	Stolons	79220	
OTHER			**SF./LF.**	
Pea Gravel	Over weed cloth	1/2" minus, 3" deep	415	SF
Root Barrier	By NDS EP Series 'Shawtown'	24" deep	878	LF
Header		1" X 6" Plastic Lumber	90	LF
Zoysia japonica 'el toro'	Grass Crete 'el toro'/ Grass Ring	Stolons	5,103	SF
Compost	See specifications sheet L-7	1" deep	84,323	SF
Restore existing lawn & irrigation			19,554	SF
HARDSCAPE (Furniture)				
Bike Rack			1	EA
Trash Recycling Receptacle	See Civil Engineers plans		10	EA
Park Table			3	EA
Picnic Table			4	EA
Picnic Table (ADA)		8' x 14'	1	EA

HAWAII LAND DESIGN
LANDSCAPE ARCHITECTS
LAND PLANNERS, LLC
2331 W. MAIN STREET
WAILUKU, MAUI, HI 96793
TELEPHONE: (808) 249-2803
FACSIMILE: (808) 249-2804

SOUTH MAUI GYM COMMUNITY PARK
LILOA DRIVE KIHEI, HAWAII 96756
TMK: (2) 02-02-024: 03

WILLIAM MITCHELL
LICENSED PROFESSIONAL LANDSCAPE ARCHITECT No. 9173
HAWAII, U.S.A.

THIS WORK WAS PREPARED BY ME OR UNDER MY DIRECT SUPERVISION AND CONSTRUCTION OF THIS PROJECT WILL BE UNDER MY SUPERVISION

Signature Expires 04-30-16

BID SET
LANDSCAPE DETAILS & NOTES

Date: 11/01/16

1 2 3 4 5 6 7

Designed by	WM
Drawn by	SY
Checked by	WM
Date	02/25/16
File No.	12-042

SHEET
L-7
7 of 9 sheets

THIS DRAWING IS AN INSTRUMENT OF SERVICE ONLY AND REMAINS THE PROPERTY OF THE LANDSCAPE ARCHITECT, ALL COPYRIGHT RESERVED

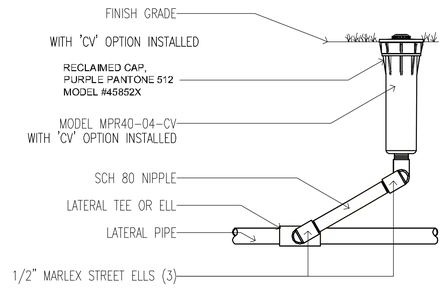

A MP ROTATOR SPRINKLER
HUNTER MPR40-04-CV

NOT TO SCALE

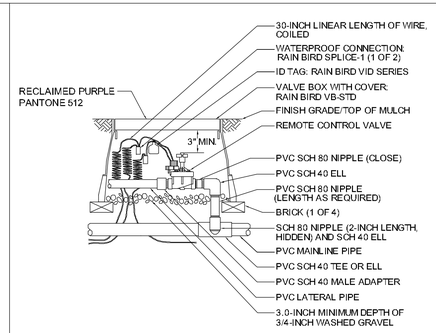

E ELECTRIC REMOTE-CONTROL VALVE
RAINBIRD

NOT TO SCALE

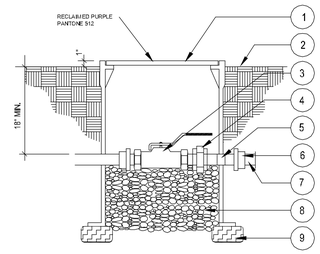

LEGEND

1. ROUND PLASTIC VALVE BOX, W/LOCKING COVER WITH BRANDING.
2. FINISH GRADE.
3. BRASS BALL VALVE. SEE IRRIGATION LEGEND.
4. BRASS UNION.
5. BRASS NIPPLE, TYP.
6. PVC ADAPTER.
7. PVC MAINLINE.
8. 1 CU. FT., PEA GRAVEL.
9. BRICK BLOCKING FOR SUPPORT.

NOTE

a. COLOR OF VALVE BOX SHALL BE GREEN IN ALL TURF AREAS AND TAN IN ALL AREAS WITH CINDER OR MULCH.

I BALL VALVE (3" & SMALLER)
RAINBIRD

NOT TO SCALE

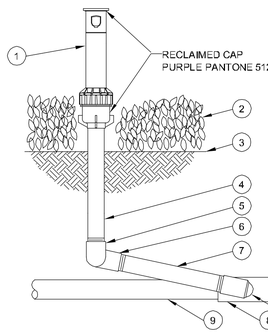

1. ROTOR SPRINKLER: RAIN BIRD 3500-S-SAM-NP 5500-S-SAM-NP
2. PLANT MATERIAL
3. FINISH GRADE
4. UV RADIATION RESISTANT PVC SCH 80 NIPPLE (LENGTH AS REQUIRED)
5. PVC SCH 40 ELL
6. PVC SCH 40 STREET ELL (1 OF 2)
7. PVC SCH 80 NIPPLE (LENGTH AS REQUIRED)
8. PVC SCH 40 TEE OR ELL
9. PVC LATERAL PIPE

B ROTOR POP-UP SPRINKLER
RAINBIRD 3500 & 5500

NOT TO SCALE

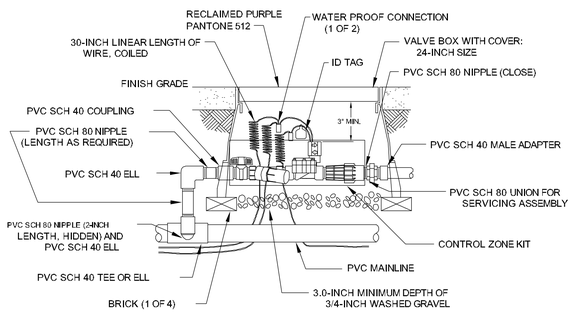

F DRIP VALVE DETAIL
RAINBIRD

NOT TO SCALE

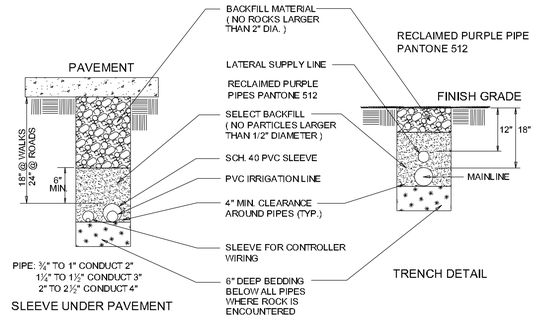

J PIPE SLEEVE & TRENCH DETAIL

NOT TO SCALE

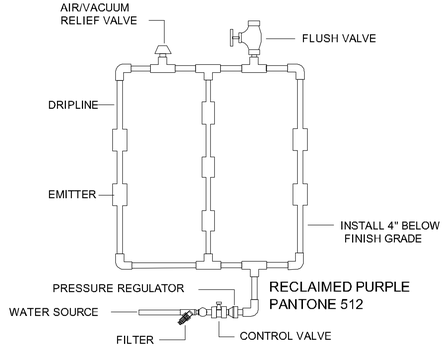

C XFD DRIPLINE IRRIGATION DETAIL
SURFACE DRIP SYSTEM

NOT TO SCALE

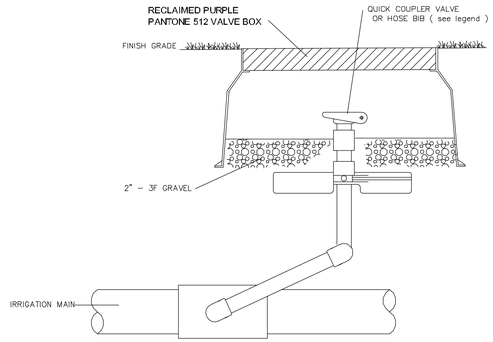

G QUICK COUPLER / HOUSE BIB STABILIZER
RAINBIRD

NOT TO SCALE

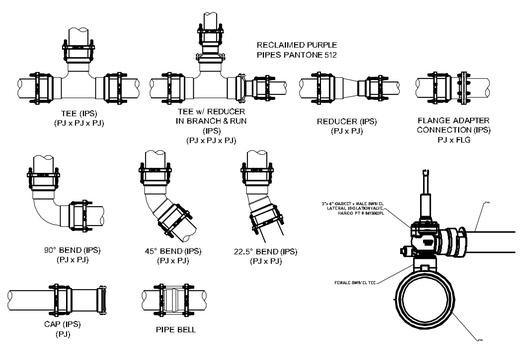

K RESTRAINED JOINTS FOR IRRIGATION MAINS

NOT TO SCALE

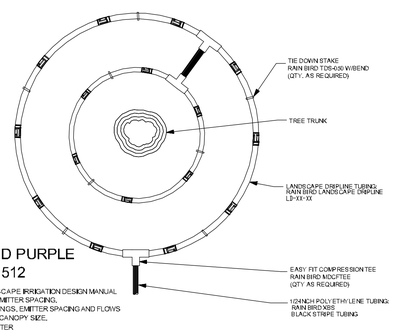

NOTE:
1. SEE "LOW-VOLUME LANDSCAPE IRRIGATION DESIGN MANUAL (D39030D) FOR DRIPLINE EMITTER SPACING.
2. QUANTITY OF DRIPLINE RINGS, EMITTER SPACING AND FLOWS ARE DEPENDANT ON TREE CANOPY SIZE.
3. MAY REQUIRE ¾" MPT ADPTER

D XFD DRIPLINE AROUND TREE DETAIL

NOT TO SCALE

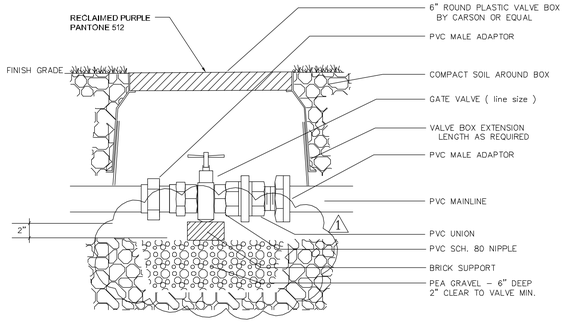

H GATE VALVE (3" & SMALLER)

NOT TO SCALE

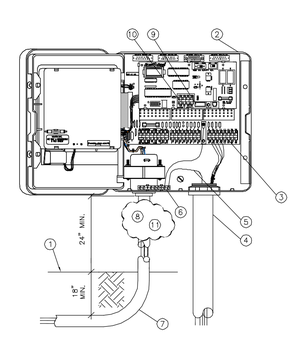

1. FINISH GRADE
2. RAIN BIRD ESP-SITE FIELD SATELLITE CONTROLLER, WALL MOUNT (METAL /PLASTIC)
3. WIRE TERMINAL CONNECTORS TO REMOTE CONTROL VALVES
4. CONDUIT - SIZE AS REQUIRED
5. #10 COPPER GROUND WIRE FROM ESP-SITE FIELD SATELLITE CONTROLLER GROUNDING BUSS BAR TO GROUNDING GRID (SEE GROUNDING GRID MAXICOM DETAIL 305)
6. ESP-SITE FIELD SATELLITE CONTROLLER GROUNDING BUSS BAR
7. 120 VOLT POWER SUPPLY
8. REFER TO LOCAL ELECTRICAL CODE FOR CONNECTIONS
9. 9-PIN CABLE CONNECTION. USE RS232 CABLE (MAX. 50FT.)
10. ESP-SITE SATELLITE SENSOR INPUT
11. RAIN BIRD WARRANTY REQUIRES PROPER SURGE PROTECTION. USE INTERMATIC AG3401 OR TRIPPLITE ISOBAR

L MAXICOM ESP FIELD SATELLITE CONTROLLER-WALL MOUNT
COMMUNICATION WIRING DIAGRAM (EXISTING)

NOT TO SCALE

IRRIGATION LEGEND:

EQUIPMENT - HEADS							
SYMBOL	HEAD	PSI	GPM	NOZZLE	RAD.	ARC	REMARKS
1, 2, 3	HUNTER MP 1000	40	.20,.40,.50,.60,.90	90,180,210,270,360	6'-10'	90,180,210,270,360	DETAIL A
4, 5, 6	HUNTER MP 2000	40	.50,.80,.90,1.1,1.5	90,180,210,270,360	10'-16'	90,180,210,270,360	DETAIL A
7, 8, 9	HUNTER MP 3000	40	.90,1.8,2.1,2.7,3.7	90,180,210,270,360	16'-22'	90,180,210,270,360	DETAIL A
10, 11, 12	HUNTER MP 3500	40	1.3, 2.9, 3.3	90, 180, 210	22'-28'	90, 180, 210	DETAIL A
	MP STRIP SPRAY	40	0.25, 0.50	MPL(R)CS515, MPSS530	5X15, 5X30		DETAIL A
13, 14, 15	Rainbrid 3500-PC-SAM	55	1.2, 2.2, 4.6	1.0, 2.0, 4.0	16', 22', 28'	90,180,210,270,360	DETAIL B
16, 17, 18	Rainbrid 5500-PC-SAM	55	2.1,2.7,4.2,8.4	90,135, 180, 360	18', 25', 35'	90,135, 180, 360	DETAIL B

FS	RAINBIRD FLOW SENSOR	RFS SIZE PER PLAN W/ MAXICOM ADD ONS RECLAIMED	DETAIL M, P, Q, R
Y	WILKINS MODEL FS	4" CAST IRON "Y" TYPE STRAINER "FLANGE BY FLANGE"	DETAIL O
	RAINBIRD PESB-R SERIES	100-PESB-R, 150-PESB-R RECLAIMED WATER	DETAIL E
	RAINBIRD ZONE DRIP KIT	LFV-075 W/ PRESSURE REGULATING FILTER (RBY)	DETAIL F
	RAINBIRD QUICK COUPLER	3/4" 33RC	DETAIL G
	NIBCO BRASS GATE VALVE	SIZE PER PLAN	DETAIL H
	NIBCO BALL VALVE	TI-7 1/4" TO 4" SIZE PER PLAN	DETAIL I
	LATERAL SCH. 40	4660-S 1/4" TO 4" SIZE PER PLAN	DETAIL J & K
	SLEEVE SCH. 40 PVC	SIZE PER PLAN	DETAIL J & K
	MAINLINE SCH. 40 PVC	SIZE PER PLAN	DETAIL J & K
CCU	RAINBIRD MAXICAM	20 STATIONS ADD-ON EXISTING MAXICOM W/DECORER	DETAIL L, M, R
PB	MAXICAM PULL BOX	PE-39 MAXI TWO WIRE	DETAIL T
M	4" R-1 WATER METER	FIELD VERIFY FOR LOCATION	
R	RAINBIRD RAIN SENSOR	RAIN SHUT-OFF	DETAIL U
	MP ROTATOR 6" LAWN POP-UP & RAINBIRD 3500, 5500		DETAIL A

STATION
VALVE SIZE
GPM

IRRIGATION GENERAL NOTES

1. All references to brand names are for sizing, construction, and performance. All references are to be considered as "or engineer approved equivalent"
2. 110 power to controllers to be provided by general contractor. Irrigation contractor is responsible for coordinating controller placement with general contractor.
3. Install low head check valves on any heads requiring them due to low head drainage.
4. Coordinate irrigation sleeves and conduit placement with the general contractor.
5. All pressure pipe and control wire shall be placed in sch. 40 pvc sleeves if crossing under paving or through walls.
6. All irrigation heads to be placed min. 6" from all walks and walls and 18" from any buildings unless noted otherwise.
7. Valve boxes should be located away from walks and high visibility areas and be set flush with finished grade.
8. Contractor shall provide two spare wires from the furthest valve or manifold to each controller.
9. Rainbird 'Pen-tite' connectors or equal shall be used at all wire connections below grade.
10. Contractor is responsible for making any adjustments to the system necessary to ensure 100% head to head coverage without spraying buildings or walls.
11. Contractor shall install pressure regulating valves if static operating pressure exceeds maximum operating pressure of the head specified.
12. Contractor shall verify static pressure at P.O.C. necessary to operate system as designed at minimun 75 p.s.i. prior to commencing work.
13. Contractor is responsible for the verification of all utility lines. Any utilities damaged as a result of the contractor's operation shall be repaired at the contractor's expense. The irrigation contractor shall coordinate closely with the general contractor to limit damage to new utilities and structures.
14. Contractor to stake alignment of lawn areas in field for approval by Landscape Architect prior to trenching lateral systems.
15. Contractor shall label all valves with water proof tags indicating the controller station operating them.
16. All materials and work shall be guaranteed for one year from written acceptance by the Owner or his representative. Contractor shall repair and/or replace any defective parts or components of the irrigation system immediately within the guarantee period at no cost to the Owner.
17. The Contractor shall, at the completion of all work, provide the Owner with one set of "AS-BUILT" drawings.
18. Contractor shall refer to written specifications accompanying these plans for additional information.
19. Install Hunter Rain Sensor and see plan for the location.
20. Drip irrigation tubing is to be covered with cinder or soil so it is not visible.
21. Contractor shall install riser with rebar-stake on all slopes, and the pop-up shall be install close to walkway, parking, pedestrian, and planter areas.
22. See Civil Plans for additional information on the installation of the irrigation piping.

HAWAII LAND DESIGN
LANDSCAPE ARCHITECTS
LAND PLANNERS, LLC
2331 W. MAIN STREET
WAILUKU, MAUI, HI 96793
TELEPHONE: (808) 249-2803
FACSIMILE: (808) 249-2804

SOUTH MAUI GYM COMMUNITY PARK

LILOA DRIVE KIHEI, HAWAII 96756

TMK: (2) 02-02-024: 03

WILLIAM MITCHELL
LICENSED PROFESSIONAL LANDSCAPE ARCHITECT
No. 9173
HAWAII, U.S.A.

THIS WORK WAS PREPARED BY ME OR UNDER MY DIRECT SUPERVISION AND CONSTRUCTION OF THIS PROJECT WILL BE UNDER MY SUPERVISION

Signature Expires 04-30-16

PERMIT SET

IRRIGATION DETAILS & NOTES

Date:11/01/16

Designed by	WM
Drawn by	SY
Checked by	WM
Date	02/25/16
File No.	12-042

SHEET L-8

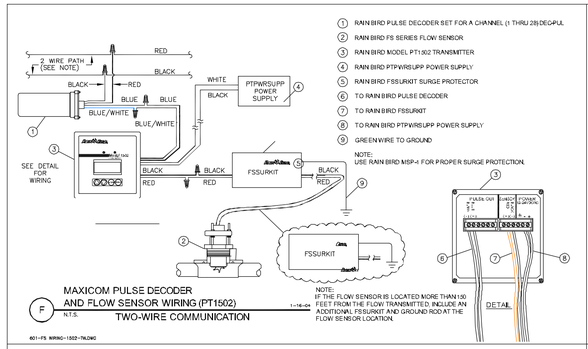

M MAXICOM PULSE DECODER & FLOW SENOR WIRING (PT1502)
TWO-WIRE COMMUNICATION

NOT TO SCALE

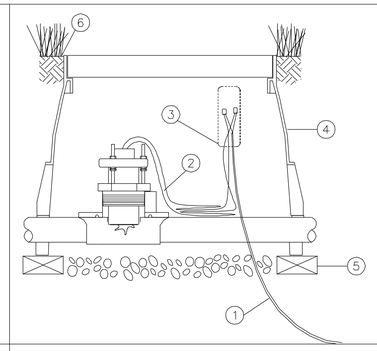

Q MAXICOM FLOW SENSOR PE-CABLE SPLICE
RAINBIRD

NOT TO SCALE

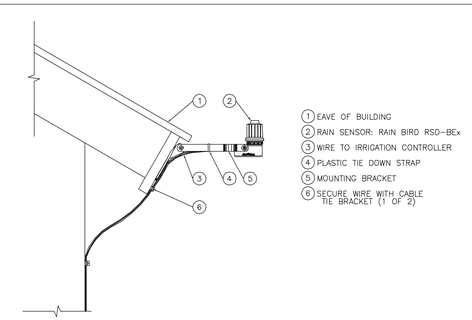

U RAIN SENSOR
RAINBIRD RSD-CDx WALL MOUNT BRACKET

NOT TO SCALE

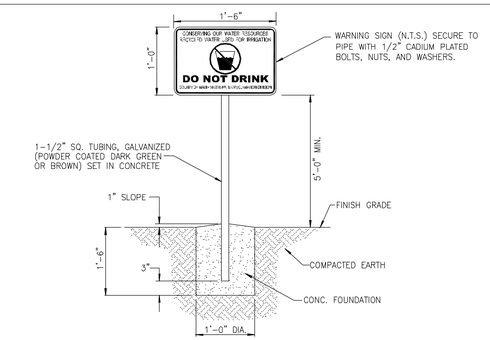

V WARNING SIGN DETAIL
SECTION

NOT TO SCALE

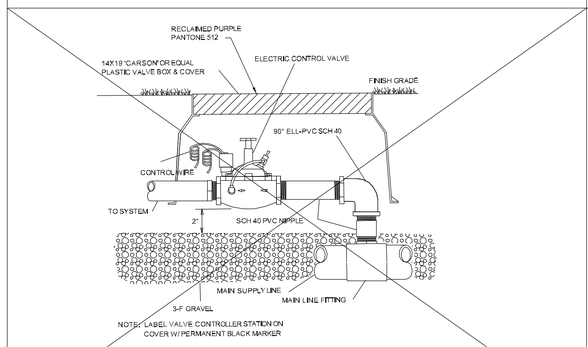

N REMOTE CONTROL MASTER VALVE IN BOX
RAINBIRD

NOT TO SCALE

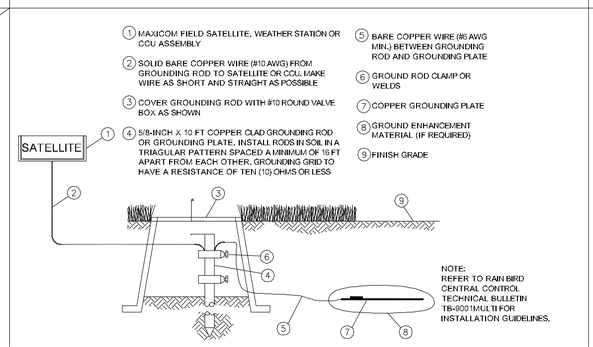

R MAXICOM CCU,SATELLITE CONTROLLER OR WEATHER STATION
GROUNDING PLATE DESIGN LAYOUT

NOT TO SCALE

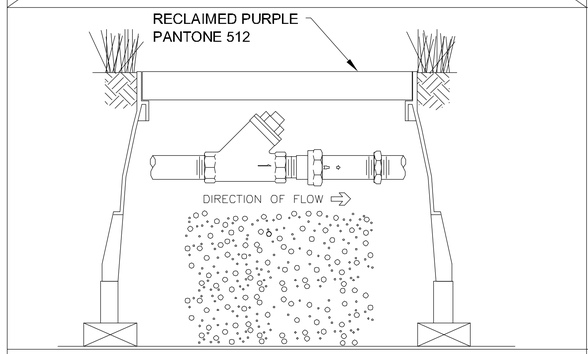

O WILKINS FS "3" WYE STRAINER
SECTION

NOT TO SCALE

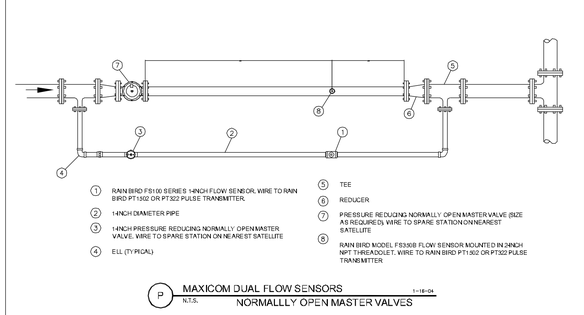

S MAXICOM DUAL FLOW SENSORE
NORMALLY OPEN MASTER VALVES

NOT TO SCALE

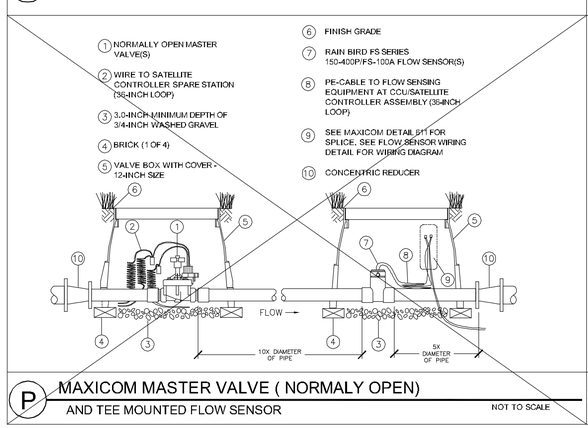

P MAXICOM MASTER VALVE (NORMALY OPEN)
AND TEE MOUNTED FLOW SENSOR

NOT TO SCALE

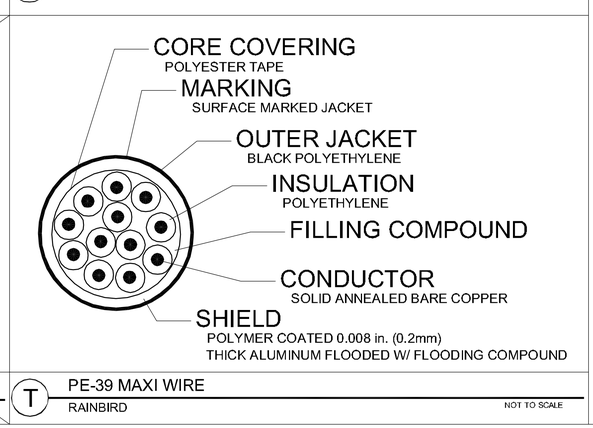

T PE-39 MAXI WIRE
RAINBIRD

NOT TO SCALE

COUNTY OF MAUI
WASTEWATER RECLAMATION DIVISION
RECYCLED WATER SYSTEM CONSTRUCTION NOTES

1. The recycled water system shall conform to all requirements of "Reuse GuidelinesVolume II.Recycled Water Projects" by the Department of Health, State of Hawaii, dated January, 2016 and the County of Maui's Rules for Reclaimed Water Service, dated June 1997.
2. All new buried transmission piping in the recycled water system, including service lines, valves, and other appurtenances shall be:
   a. Colored purple, suggested color pantone 512 or equal, and
   b. Embossed or be integrally stamped/marked "Recycled Water - Do Not Drink", be installed with purple identification tape, or a purple polyethylene wrap, suggested color pantone 512 or equal.
3. Irrigation heads shall be colored purple, have a purple collar, or integrally stamped/embossed identifying the component as containing "recycled water"
4. Valve and meter boxes conform to the "Water System Standards", State of Hawaii, 2002. All valve covers on recycled water lines shall contain "Recycled Water" inscriptions on the top surface, or be colored purple, suggested color pantone 512 or equal
5. All Pipes, valves, boxes, meters, markers, or any other recycled water component shall not contain the words "potable", "domestic", "drinking", or any other words implying potable drinking water.
6. All ductile iron recycled water main lines shall be pressure tested with water and shall maintain a pressure of 225 psi for a minimum time period of two hours. All PVC C900 recycled water main lines shall be pressure tested with water and shall maintain a pressure of 1.5 times the normal working pressure for a minimum time period of two hours.
7. All recycled water meters shall be a Badger Meter Co. Turbo Meter with strainer or approved equal. Recycled water meter totalizer shall have a purple colored lid and shroud.
8. Hose bibs shall not be connected to the recycled water system unless done so using a quick-coupler with locking purple cap.
9. Notification signs indicating that recycled water is being used shall be posted at conspicuous locations throughout the project. The signs shall indicate both in writing and pictorially that recycled water is not suitable for drinking. The location and detail of the signs shall be noted on the construction plans and submitted to the County and State for approval.
10. Recycled water transmission and distribution mains shall have a minimum cover of 48" to finish grade in paved areas, and 36" in to finish grade in undeveloped areas.
11. Recycled water transmission and distribution mains shall have a horizontal separation of 5 feet to sewerlines, and 3 feet to waterlines and other utilities
12. Recycled Water transmission and distribution mains shall have a vertical clearance of 12" to waterlines, 18" to sewerlines and 6" to all other utilities at crossings. Recycled waterlines shall always be installed below the potable waterlines, unless approved by the County
13. At no time shall there be a connection of any kind between the potable water system and the recycled water system.
14. When a potable water system exists on the property, a backflow preventer shall be installed on the potable water supply line prior to construction of the recycled water system.
15. Before construction commences, the contractor shall schedule and document a pre-construction meeting with all agencies having utilities affected by the work.
16. Contractor must have a Site Specific Spill Prevention Plan (SSSPP) approved by WWRD prior to recycled water construction, or any work within five (5) feet of an existing recycled water system.
17. Before backfilling trenches for all recycled water and potable water pipe lines, the contractor shall request an inspection from the Department of Environmental Management to verify horizontal and vertical clearances between the lines.
18. The Department of Environmental Management, Wastewater Reclamation Division, has the right to stop construction should any work be found contrary to the approved plans and specifications, or detrimental to public interest.
19. All existing utilities, whether or not shown on the plans, if damaged during construction, shall be repaired by the contractor and the contractor shall pay all expenses.
20. All backfill for recycled water line trenches shall be compacted to a minimum of 95% of its maximum density.
21. After the installation of the recycled water line, the line shall be pressure tested as described in No. 6 above and flushed with water.
22. All water mains and appurtenances (both potable and recycled water) within the property shall be subjected to a cross-connection test to determine if cross-connections exist prior to occupancy of the project. Crossconnection testing will be conducted in the presence of the design engineer and County and Department of Health inspectors. Start up approval of the recycled water system is conditional upon the Department of Health receiving a written report of the test results confirming that no cross-connections exist. Copies of the report shall also be provided to each respective project's recycled water supervisor and the County of Maui's Wastewater Reclamation Division.
23. The contractor shall maintain a "Job Site Copy" of the plans at the project site which will record any changes made in the field. "As-Built" drawings shall be submitted as a condition for final acceptance of the project.
24. Contractor shall be responsible for recording the GPS Coordinates of all buried and concealed work to be dedicated to the County, and provide the GPS data to the County prior to the project's final acceptance. An accurate GPS point every (50) feet along the main line, at utility crossings, and at any installed appurtenance (including but not limited to manholes, bends, concrete jacket, lateral connection, pipe deviations, change in pipe size, critical joints, ARV, etc.). GPS data shall be in NAD 1983 State Plane Hawaii Zone 2 FIPS 5102 grid, and shall be accurate to within one (1) foot. Acquired GPS survey data shall be quality checked by the contractor prior to submission in shapefile (.shp) format, for compatibility with mainstream GIS software such as ESRI ArcMap.

Revised October 2015

HAWAII LAND DESIGN
LANDSCAPE ARCHITECTS
LAND PLANNERS, LLC
2331 W. MAIN STREET
WAILUKU, MAUI, HI 96793
TELEPHONE: (808) 249-2803
FACSIMILE: (808) 249-2804

SOUTH MAUI GYM COMMUNITY PARK
LILOA DRIVE KIHEI, HAWAII 96756
TMK: (2) 02-02-024: 03

WILLIAM MITCHELL
LICENSED PROFESSIONAL LANDSCAPE ARCHITECT
No. 9173
HAWAII, U.S.A.

THIS WORK WAS PREPARED BY ME OR UNDER MY DIRECT SUPERVISION AND CONSTRUCTION OF THIS PROJECT WILL BE UNDER MY SUPERVISION

Signature Expires 04-30-18

BID SET

IRRIGATION DETAILS & NOTES

DATE: 11/01/16

1
2
3
4
5
6
7

Designed by	WM
Drawn by	SY
Checked by	WM
Date	02/25/16
File No.	12-042

SHEET L-9

9 of 9 sheets

COUNTY OF MAUI
MAUI COUNTY CODE, CHAPTER 16.16A ENERGY CODE

To the best of my knowledge, this project's design substantially conforms to the Energy Code for:

__X__ Building Component Systems

_____ Electrical Component Systems

_____ Mechanical Component Systems

Signature: _____ **Date:** 3/28/18

Name: Clayton Nishikawa

Title: Principal

License No: 6710

South Maui Community Park - Parking Analysis for all Phases & Component Uses

Component Use	Quantity	Unit	Required Parking: Stalls / Unit	Required Parking: Stalls	Rounded Up Stalls	Number & Type of Parking Provided: Accessible Stalls	Standard Stalls	Standard Accessible	Van Accessible	EV Stalls	EV Accessible	Total	Comments
Phase I-A:													
(2 Soccer Fields, 1 Restroom)													
Soccer Fields	1	ea	0	0.00	0		12						12 Stalls / Field Used
Soccer Field Bleacher Seating	80	seats	1 Stall / 6 Seats	13.33	14		14						Based on 60 Bleacher Seats / Field (None Installed)
Public Restroom	225	sf	1 Stall / 500 sf	0.45	1		1						Based on 1 Restroom @ 225 s.f. each
Subtotal Phase I-A:				13.78	15	1	27	0	2	0	0	29	
Phase I-B													
(Softball Field, 1 Restroom)													
Softball Fields	1	ea	0	0.00	0		33						12 Stalls / Field Used
Softball Field Bleacher Seating	160	seats	1 Stall / 6 Seats	26.67	27		27						Based on 160 Bleacher Seats / Field
Public Restroom	225	sf	1 Stall / 500 sf	0.45	1		1						Based on 1 Restroom @ 225 s.f. each
Subtotal Phase I-B:				27.12	28	2	61	0	4	0	0	65	
Total Existing Stalls:					43	3	88	0	6	0	0	94	Surplus Stalls: 48 Standard & 3 Accessible
Phase I-C													
(Recreation Center)													
Gymnasium Seating	1088	seats	1 Stall / 6 Seats	181.33	182								
Meeting Rooms	1246	sf	1 Stall / 500 sf	2.49	3								
Office	353	sf	1 Stall / 500 sf	0.71	1								
Subtotal Phase I-C:				184.53	186	6	160	0	8	1	1	170	Additional Parking for Current Phase
Total for above Phases:					229	9	248	0	14	1	1	264	Surplus Stalls: 28 Standard & 5 Accessible
Phase I-D													
(Maintenance Building)													
DPA R Maintenance Building	3250	sf	1 Stall / 700 sf	4.64	5								Deleted
Subtotal Phase I-D:					5	1	0	0	0	0	0	0	
Phase I-E													
(Future Youth Center)													
Youth Center	8882	sf	1 Stall / 200 sf	44.41	45								Deleted
Subtotal Phase I-E:					45	1	0	0	0	0	0	0	
Phase II													
(2 Soccer Field, 1 Baseball Field, 1 Softball Field, Amphitheater, Pavilion & 2 Restrooms)													
Soccer Fields	2	ea	12 Stalls / Field	24.00	24								
Soccer Field Bleacher Seating	160	seats	1 Stall / 6 Seats	26.67	27								
Public Restroom	225	sf	1 Stall / 500 sf	0.45	1								
Baseball Fields	1	ea	12 Stalls / Field	12.00	12								
Baseball Field Bleacher Seating	160	seats	1 Stall / 6 Seats	26.67	27								
Public Restroom	225	sf	1 Stall / 500 sf	0.45	1								
Softball Fields	1	ea	12 Stalls / Field	12.00	12								
Softball Field Bleacher Seating	160	seats	1 Stall / 6 Seats	26.67	27								
Pavilion	2400	sf	1 Stall / 100 sf	24.00	24								
Amphitheather	275	sf	1 Stall / 6 Seats	45.83	46								
Future Overflow Grass Parking													
Subtotal Phase II:					201	7	323	0	12	0	0	335	
Phase III													
(5 Multi-Use & 1 Restroom, South of Kenani Gulch)													
Multi-Use Courts (Phase 3)	5	ea	3 Stalls / Court	15.00	15								
Public Restroom	225	sf	1 Stall / 500 sf	0.45	1								
Subtotal Phase III:					16	1	16	0	1	0	0	17	
PROJECT TOTAL - ALL PHASES:					496	19	587	0	27	1	1	616	

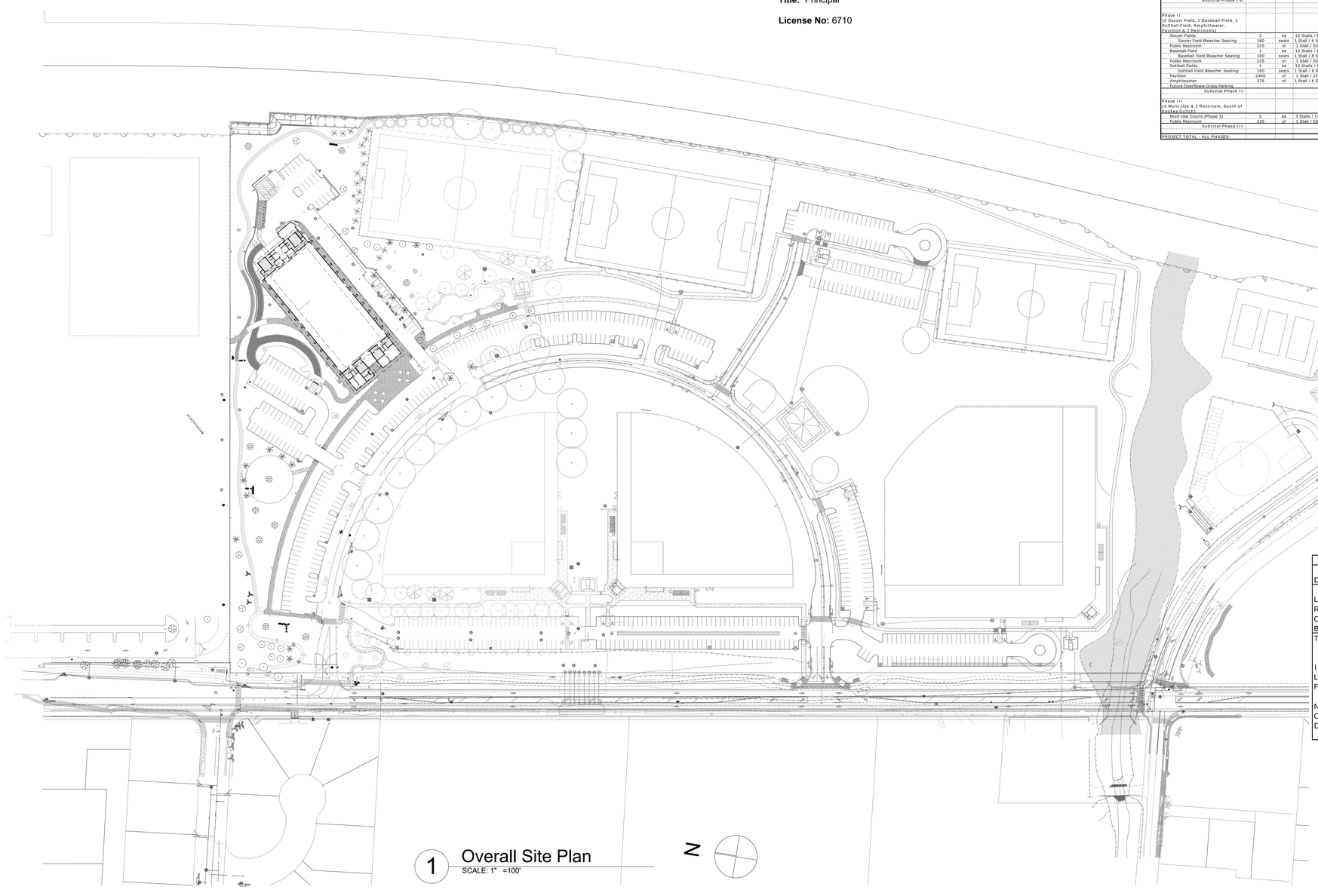

1 Overall Site Plan
SCALE: 1" =100'

N

South Maui Community Park - Overall Site SF Area Calculations

Description	Existing	Proposed	Future	Total
Lot Area	1,835,008.56	1,835,008.56	1,835,008.56	1,835,008.56
Roads/Parking	90,425.20	72,381.14	149,676.19	312,482.53
Concrete Sidewalks/Plaza	30,582.14	21,670.85	126,415.20	178,668.19
Buildings	2,256.89	32,220.53	7,388.02	41,865.44
Total	123,264.23	126,272.52	283,479.41	533,016.16
Impervious Ratio	6.72%	6.88%	15.45%	29.05%
Lot Coverage Ratio	0.12%	1.76%	0.40%	2.28%
Floor Area Ratio	0.12%	1.76%	0.40%	2.28%
Net Buildable Area	N/A			
Open Space	N/A			
Density Factors	N/A			

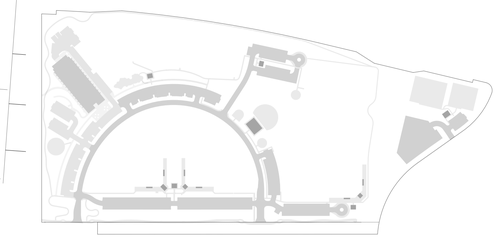

BID SET

2145 Wells Street, Suite 301
Wailuku, Hawaii 96793
Phone: (808) 242-6800
Fax: (808) 986-8301
Email: nai@alcmaui.com
www.nishikawaarchitectsmaui.com

• Nishikawa Architects, Inc.

© 2017 Nishikawa Architects, Inc.

CLAYTON H. NISHIKAWA
LICENSED PROFESSIONAL ARCHITECT
No. 6710

THIS WORK WAS PREPARED BY ME OR UNDER MY SUPERVISION. CONSTRUCTION OF THIS PROJECT WILL BE UNDER MY OBSERVATION.

South Maui Community Park
Recreation Center
Liloa Drive, Kihei, Hawaii
TMK: (2) 2-2-02 : 42
Job # P12/012

REVISIONS:

Overall Site Plan

A-1

SHEET:
PROJECT NO: #Pln
DATE: 11/01/16

ALL DOCUMENTS AND INSTRUMENTS PREPARED BY NISHIKAWA ARCHITECTS, INC. AS INSTRUMENTS OF SERVICE SHALL REMAIN THE PROPERTY OF NISHIKAWA ARCHITECTS, INC. AND IS PROTECTED BY COPYRIGHT LAW AND MAY NOT BE REPRODUCED WITHOUT PERMISSION.

A-1 Overall Site Plan - Plotted on 1/23/17 at 4:27 PM by Darwin Kyabu, File Path: BIM Server: bimserver/local - BIM Server 18/1406 SMCPG/SMCP Recreation Center 18

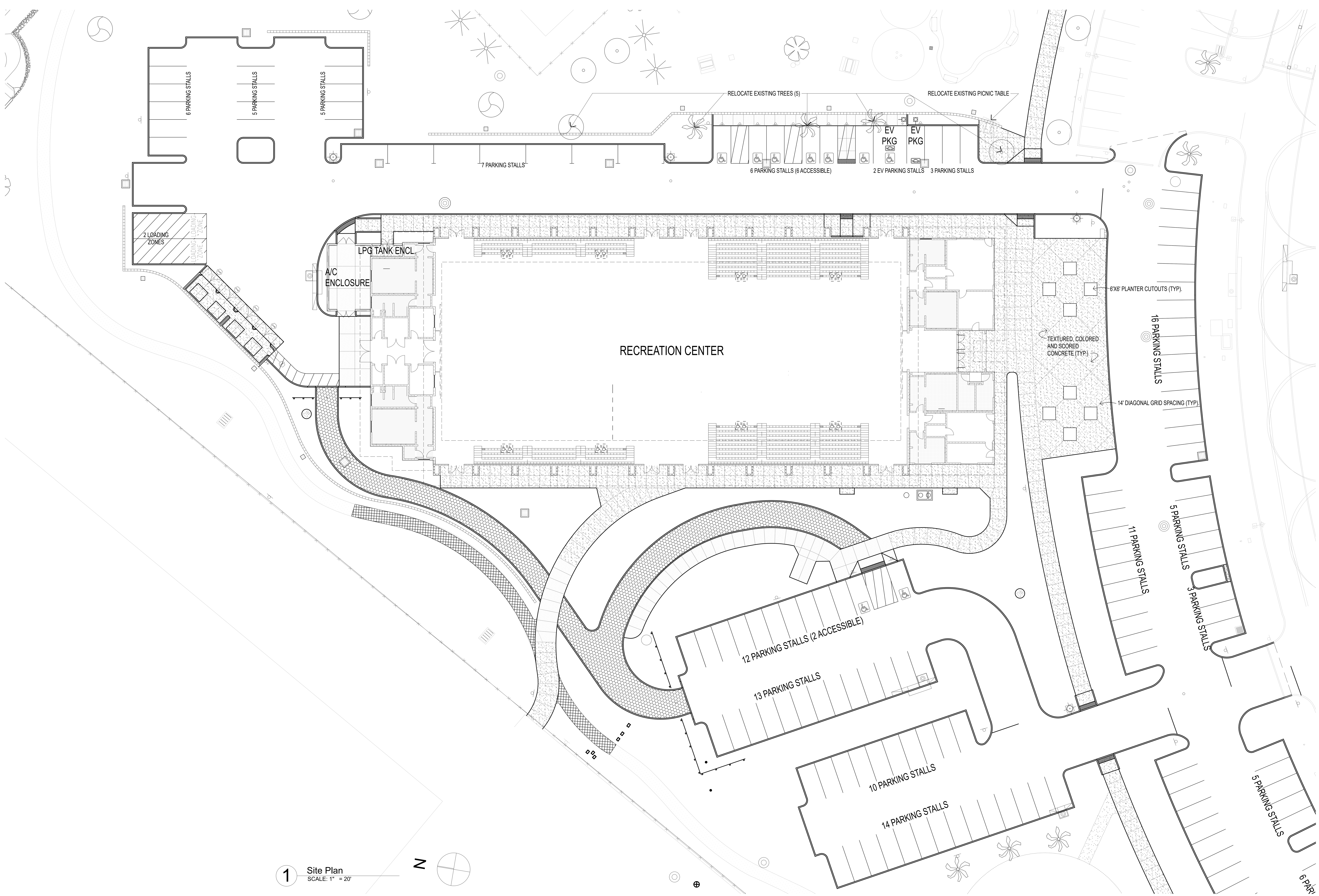

1 Site Plan
SCALE: 1" = 20'

BID SET

THIS WORK WAS PREPARED BY ME OR UNDER MY SUPERVISION. CONSTRUCTION OF THIS PROJECT WILL BE UNDER MY OBSERVATION.

CLAYTON H. NISHIKAWA LICENSED PROFESSIONAL ARCHITECT No. 6710 HAWAII, U.S.A.
LICENSE EXPIRES 4/30/2018

Nishikawa Architects, Inc.
2145 Wells Street, Suite 301
Wailuku, Hawaii 96793
Telephone: (808) 242-6900
Fax: (808) 986-8301
Email: nai@adcmaui.com
www.nishikawaarchitectsmaui.com

© 2017 Nishikawa Architects, Inc.

South Maui Community Park
Recreation Center
Liloa Drive, Kihei, Hawaii
TMK: (2) 2-2-02 : 42
Job # P12/012

REVISIONS:

Site Plan

A-2

SHEET:
PROJECT NO: #Pln
DATE: 11/01/16

ALL DOCUMENTS AND INSTRUMENTS PREPARED BY NISHIKAWA ARCHITECTS, INC. AS INSTRUMENTS OF SERVICE SHALL REMAIN THE PROPERTY OF NISHIKAWA ARCHITECTS, INC. AND IS PROTECTED BY COPYRIGHT LAW AND MAY NOT BE REPRODUCED WITHOUT PERMISSION.

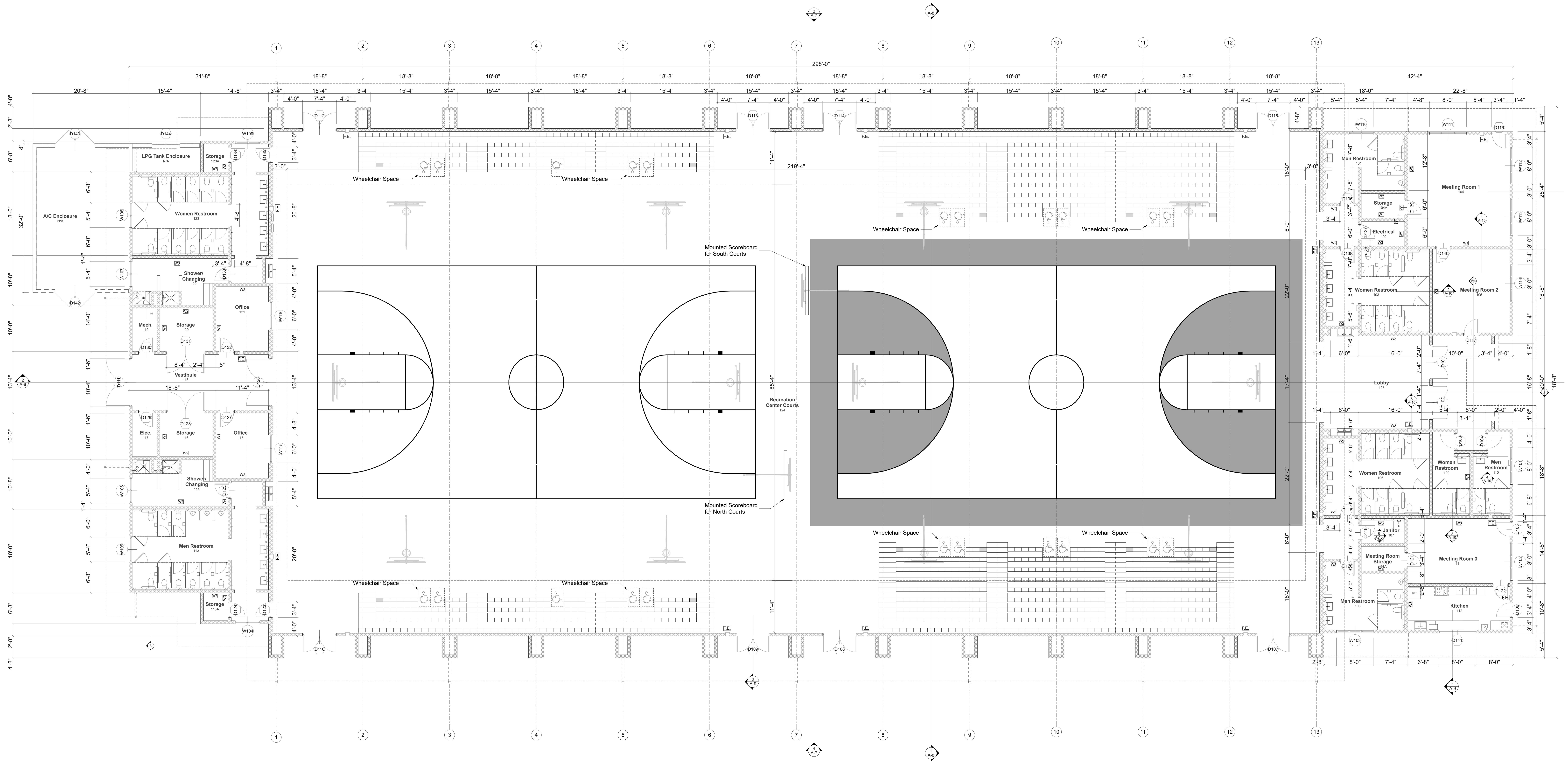

1 First Floor Plan
SCALE: 3/32" = 1'-0"

BID SET

THIS WORK WAS PREPARED BY ME OR UNDER MY SUPERVISION. CONSTRUCTION OF THIS PROJECT WILL BE UNDER MY OBSERVATION.

CLAYTON H. NISHIKAWA LICENSED PROFESSIONAL ARCHITECT No. 6710 HAWAII, U.S.A.
LICENSE EXPIRES 4/30/2018

Nishikawa Architects, Inc.
2145 Wells Street, Suite 301
Wailuku, Hawaii 96793
Telephone: (808) 242-6900
Fax: (808) 986-8301
Email: nai@adcmaui.com
www.nishikawaarchitectsmaui.com

© 2017 Nishikawa Architects, Inc.

South Maui Community Park
Recreation Center
Liloa Drive, Kihei, Hawaii
TMK: (2) 2-2-02 : 42
Job # P12/012

REVISIONS:

Floor Plan

A-3

SHEET:
PROJECT NO: #Pln
DATE: 11/01/16

ALL DOCUMENTS AND INSTRUMENTS PREPARED BY NISHIKAWA ARCHITECTS, INC. AS INSTRUMENTS OF SERVICE SHALL REMAIN THE PROPERTY OF NISHIKAWA ARCHITECTS, INC. AND IS PROTECTED BY COPYRIGHT LAW AND MAY NOT BE REPRODUCED WITHOUT PERMISSION.

A-3 Floor Plan : Plotted on 1/23/17 at 4:27 PM by Darwin Kiyabu. File Path: BIM Server: bimserver.local - BIM Server 18/1406 SMCP|G/SMCP Recreation Center 18

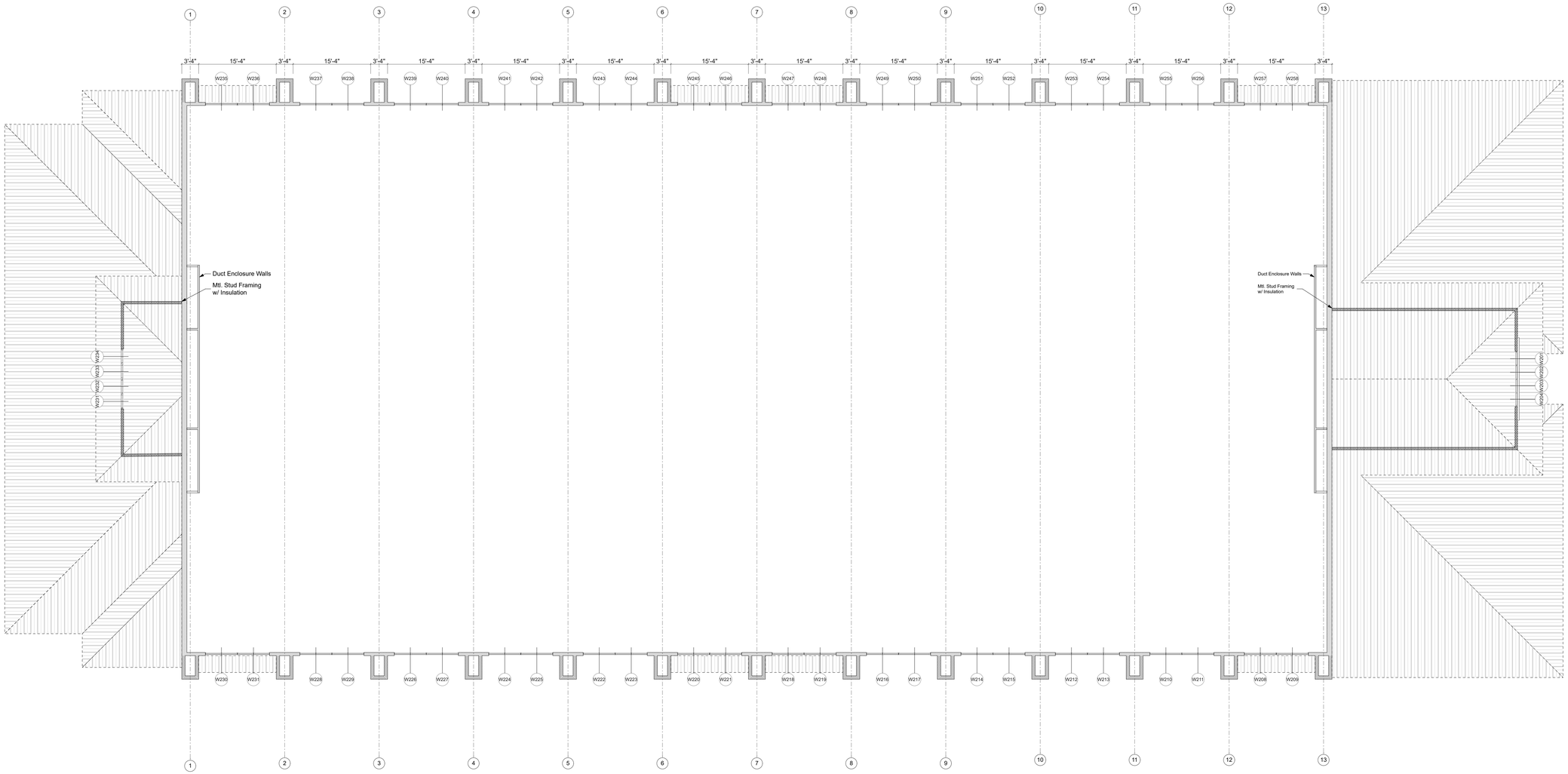

1 Second Floor Plan
SCALE: 3/32" = 1'-0"

BID SET

2145 Wells Street, Suite 301
Wailuku, Hawaii 96793
Telephone: (808) 242-6800
Fax: (808) 986-8301
Email: nai@alohanet.com
www.nishikawaarchitectsmaui.com

Nishikawa Architects, Inc.

© 2017 Nishikawa Architects, Inc.

CLAYTON H. NISHIKAWA
LICENSED PROFESSIONAL ARCHITECT
No. 6716
HAWAII, U.S.A.

THIS WORK WAS PREPARED BY ME OR UNDER MY SUPERVISION. CONSTRUCTION OF THIS PROJECT WILL BE UNDER MY OBSERVATION.

South Maui Community Park
Recreation Center
Liloa Drive, Kihei, Hawaii
TMK: (2) 2-2-02 : 42
Job # P12/012

REVISIONS:

Second Floor/Lower Roof Plan

A-4

SHEET:
PROJECT NO: #Pln
DATE: 11/01/16

ALL DOCUMENTS AND INSTRUMENTS PREPARED BY NISHIKAWA ARCHITECTS, INC. AS INSTRUMENTS OF SERVICE SHALL REMAIN THE PROPERTY OF NISHIKAWA ARCHITECTS, INC. AND IS PROTECTED BY COPYRIGHT LAW AND MAY NOT BE REPRODUCED WITHOUT PERMISSION.

A-4 Second Floor/Lower Roof Plan , Plotted on 1/23/17 at 4:27 PM by Darwin Kyabu, File Path: BIM Server: bimserver/local - BIM Server 18/1406 SMCPC/SMCP Recreation Center 18

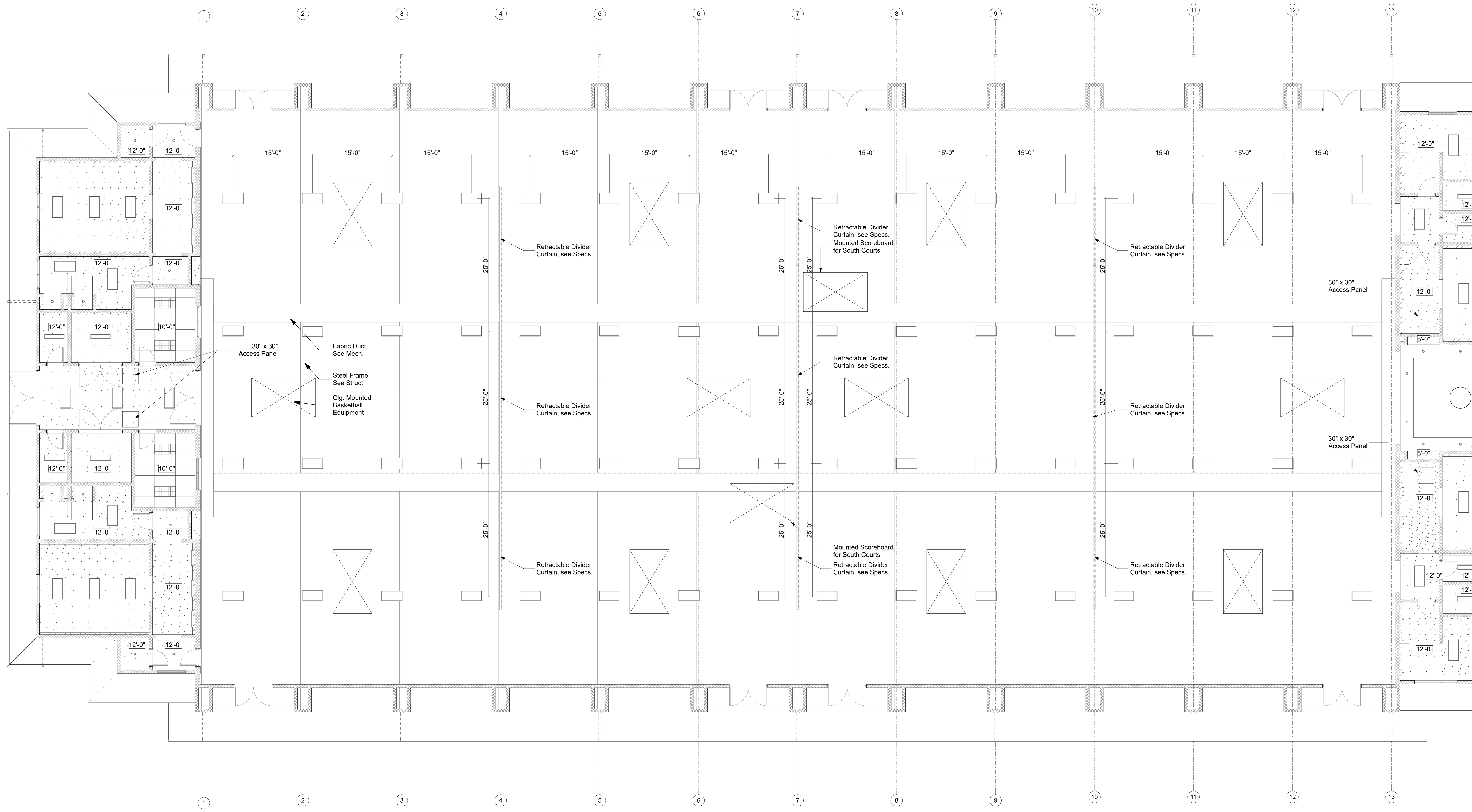

1 First Floor Ceiling Plan

SCALE: 3/32" = 1'-0"

BID SET

Nishikawa Architects, Inc.
2145 Wells Street, Suite 301
Wailuku, Hawaii 96793
Telephone: (808) 242-6900
Fax: (808) 986-8301
Email: nai@nishikawamaui.com
www.nishikawaarchitectsmaui.com

© 2017 Nishikawa Architects, Inc.

CLAYTON H. NISHIKAWA LICENSED PROFESSIONAL ARCHITECT No. 6710

THIS WORK WAS PREPARED BY ME OR UNDER MY SUPERVISION. CONSTRUCTION OF THIS PROJECT WILL BE UNDER MY OBSERVATION.

South Maui Community Park
Recreation Center
Liloa Drive, Kihei, Hawaii
TMK: (2) 2-2-02 : 42
Job # P12/012

REVISIONS:

Reflected Ceiling Plan

A-5

SHEET:
PROJECT NO: #Pln
DATE: 11/01/16

ALL DOCUMENTS AND INSTRUMENTS PREPARED BY NISHIKAWA ARCHITECTS, INC. AS INSTRUMENTS OF SERVICE SHALL REMAIN THE PROPERTY OF NISHIKAWA ARCHITECTS, INC. AND IS PROTECTED BY COPYRIGHT LAW AND MAY NOT BE REPRODUCED WITHOUT PERMISSION.

A-5 Reflected Ceiling Plan : Plotted on 1/23/17 at 4:27 PM by Darwin Kiyabu. File Path: BIM Server: bimserver.local - BIM Server 18/1406 SMCP/SMCP Recreation Center 18

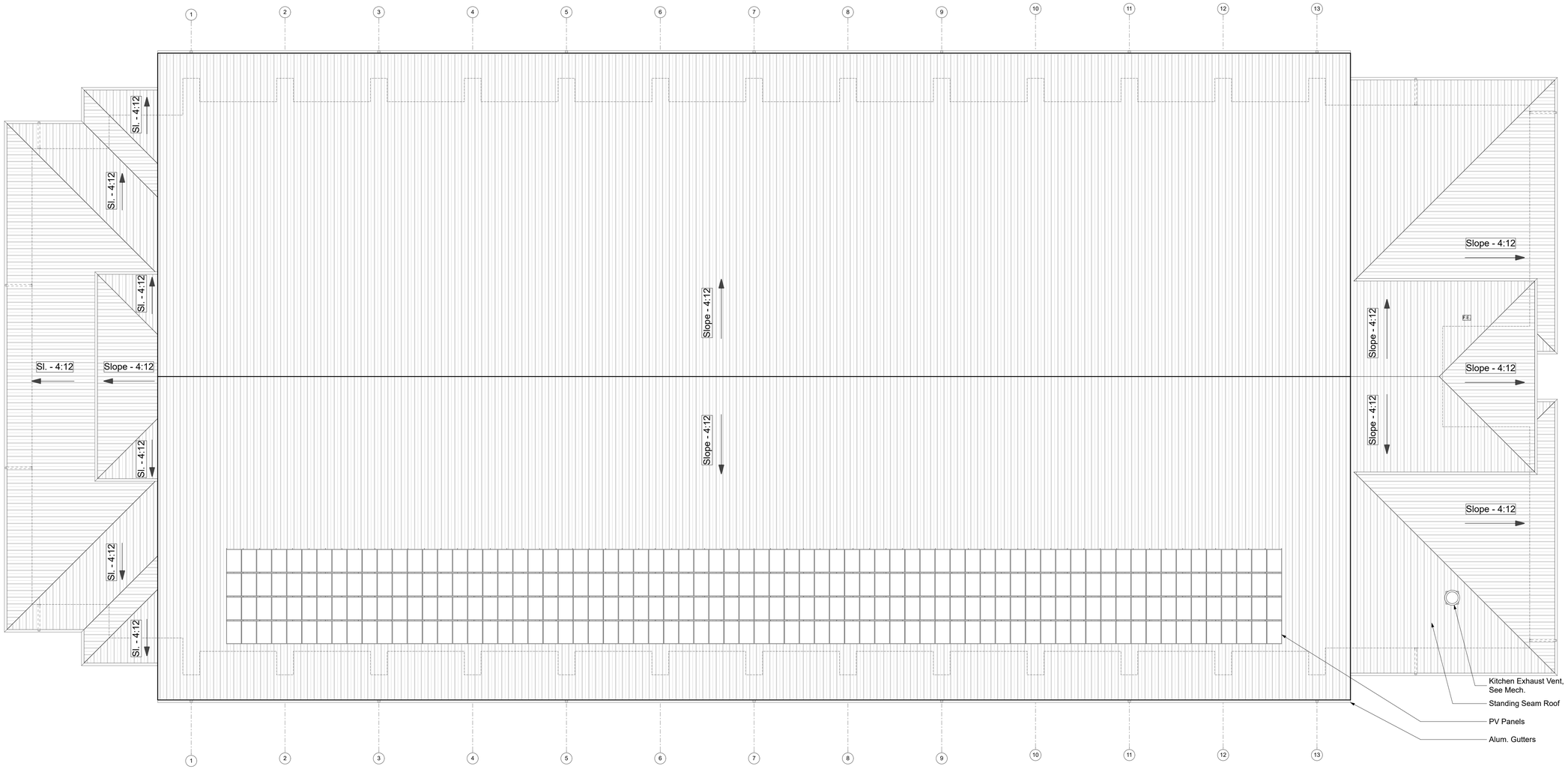

1 Roof Plan
SCALE: 3/32" = 1'-0"

BID SET

2145 Wells Street, Suite 301
Wailuku, Hawaii 96793
Telephone: (808) 242-6800
Fax: (808) 986-8301
Email: nai@alcmaui.com
www.nishikawaarchitectsmaui.com

Nishikawa Architects, Inc.

© 2017 Nishikawa Architects, Inc.

CLAYTON H. NISHIKAWA
LICENSED PROFESSIONAL ARCHITECT
No. 6716
HAWAII, U.S.A.

THIS WORK WAS PREPARED BY ME OR UNDER MY SUPERVISION. CONSTRUCTION OF THIS PROJECT WILL BE UNDER MY OBSERVATION.

South Maui Community Park
Recreation Center

Liloa Drive, Kihei, Hawaii
TMK: (2) 2-2-02 : 42
Job # P12/012

REVISIONS:

Roof Plan

A-6

SHEET:
PROJECT NO: #Pln
DATE: 11/01/16

ALL DOCUMENTS AND INSTRUMENTS PREPARED BY NISHIKAWA ARCHITECTS, INC. AS INSTRUMENTS OF SERVICE SHALL REMAIN THE PROPERTY OF NISHIKAWA ARCHITECTS, INC. AND IS PROTECTED BY COPYRIGHT LAW AND MAY NOT BE REPRODUCED WITHOUT PERMISSION.

A-6 Roof Plan - Plotted on 1/23/17 at 4:27 PM by Darwin Kiyabu. File Path: BIM Server: bimserver:local - BIM Server 18 | 1406 SMCPG/SMCP Recreation Center 18

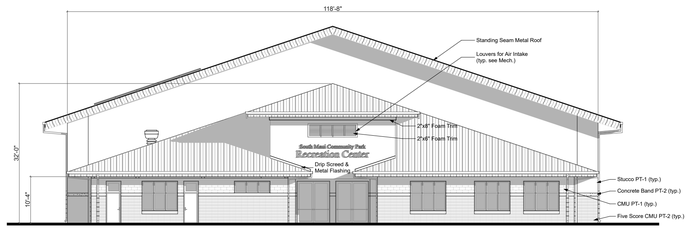

1 South Elevation

SCALE: 1/16" = 1'-0"

2 East Elevation

SCALE: 1/16" = 1'-0"

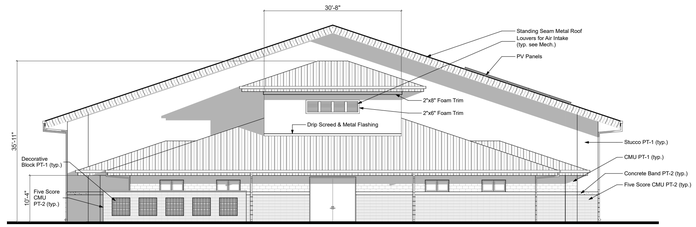

3 North Elevation

SCALE: 1/16" = 1'-0"

4 West Elevation

SCALE: 1/16" = 1'-0"

BID SET

2145 Wells Street, Suite 301
Wailuku, Hawaii 96793
Telephone: (808) 242-6800
Fax: (808) 986-8301
Email: nai@alemaui.com
www.nishikawaarchitectsmaui.com

Nishikawa Architects, Inc.

© 2017 Nishikawa Architects, Inc.

CLAYTON H. NISHIKAWA
LICENSED PROFESSIONAL ARCHITECT
No. 6716
HAWAII

THIS WORK WAS PREPARED BY ME OR UNDER MY SUPERVISION. CONSTRUCTION OF THIS PROJECT WILL BE UNDER MY OBSERVATION.

South Maui Community Park
Recreation Center

Liloa Drive, Kihei, Hawaii
TMK: (2) 2-2-02 : 42
Job # P12/012

REVISIONS:

Elevations

A-7

SHEET:
PROJECT NO: #Pln
DATE: 11/01/16

ALL DOCUMENTS AND INSTRUMENTS PREPARED BY NISHIKAWA ARCHITECTS, INC. AS INSTRUMENTS OF SERVICE SHALL REMAIN THE PROPERTY OF NISHIKAWA ARCHITECTS, INC. AND IS PROTECTED BY COPYRIGHT LAW AND MAY NOT BE REPRODUCED WITHOUT PERMISSION.

A-7 Elevations - Plotted on 12/2/17 at 4:27 PM by Dawn Kyabe. File Path: BIM Server: bimserver.local - BIM Server 181406 SMCPG\SMCP Recreation Center 18

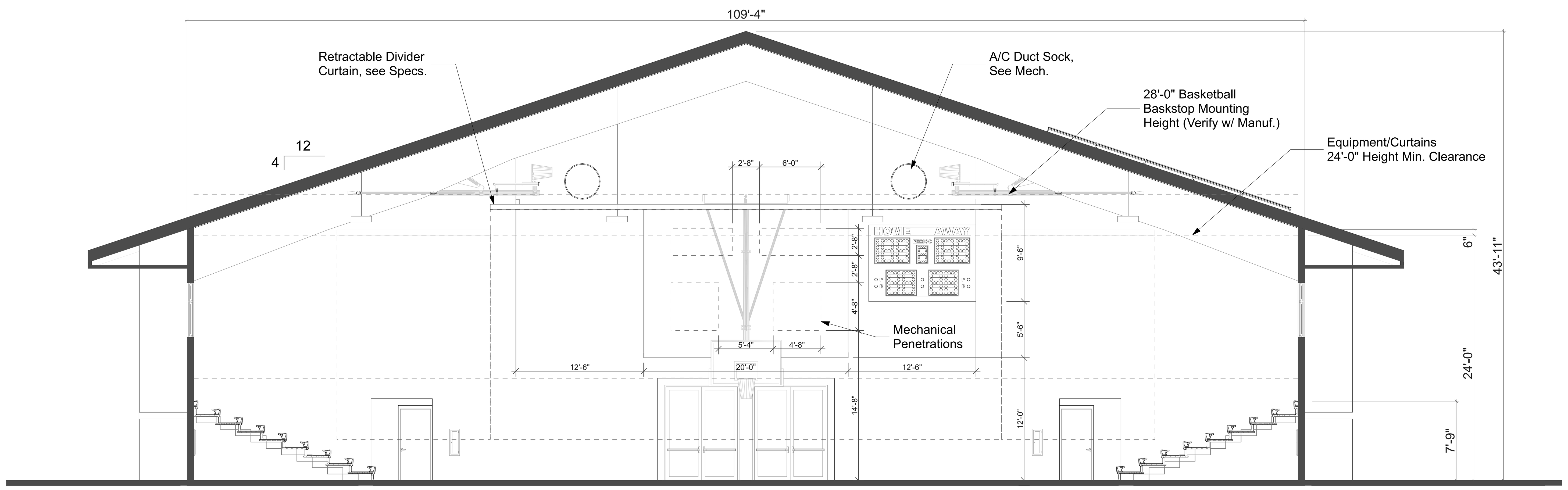

1 Cross Section
SCALE: 1/8" = 1'-0"

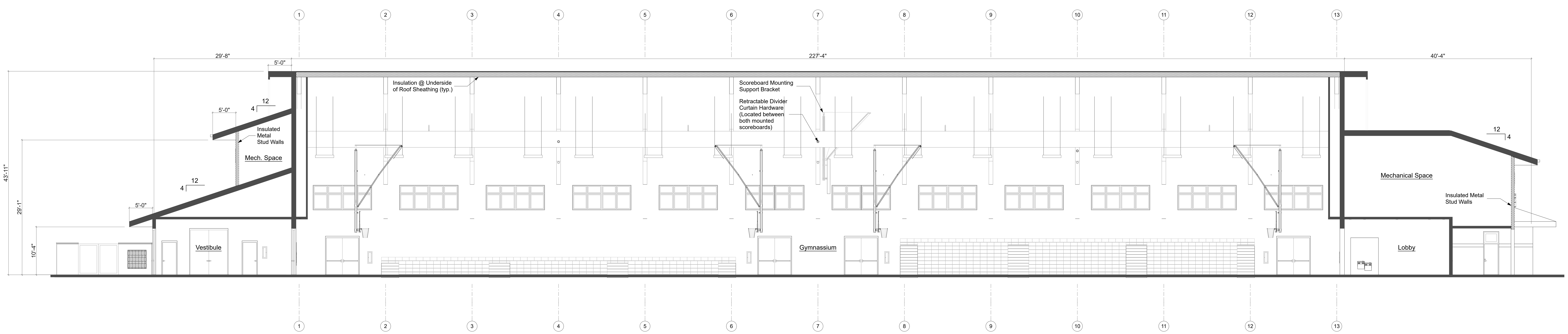

2 Longitudinal Section
SCALE: 3/32" = 1'-0"

BID SET

2145 Wells Street, Suite 301
Wailuku, Hawaii 96793
Telephone: (808) 242-6900
Fax: (808) 986-8301
Email: nai@adcmaui.com
www.nishikawaarchitectsmaui.com

Nishikawa Architects, Inc.

© 2017 Nishikawa Architects, Inc.

CLAYTON H. NISHIKAWA
LICENSED PROFESSIONAL ARCHITECT
No. 6710
LICENSE EXPIRES 4/30/2018

THIS WORK WAS PREPARED BY ME OR UNDER MY SUPERVISION. CONSTRUCTION OF THIS PROJECT WILL BE UNDER MY OBSERVATION.

South Maui Community Park
Recreation Center
Liloa Drive, Kihei, Hawaii
TMK: (2) 2-2-02 : 42
Job # P12/012

REVISIONS:

Sections

A-8

SHEET:
PROJECT NO: #Pln
DATE: 11/01/16

ALL DOCUMENTS AND INSTRUMENTS PREPARED BY NISHIKAWA ARCHITECTS, INC. AS INSTRUMENTS OF SERVICE SHALL REMAIN THE PROPERTY OF NISHIKAWA ARCHITECTS, INC. AND IS PROTECTED BY COPYRIGHT LAW AND MAY NOT BE REPRODUCED WITHOUT PERMISSION.

A-8 Sections : Plotted on 1/23/17 at 4:27 PM by Darwin Kiyabu. File Path: BIM Server: bimserver.local - BIM Server 18/1406 SMCP/SMCP Recreation Center 18

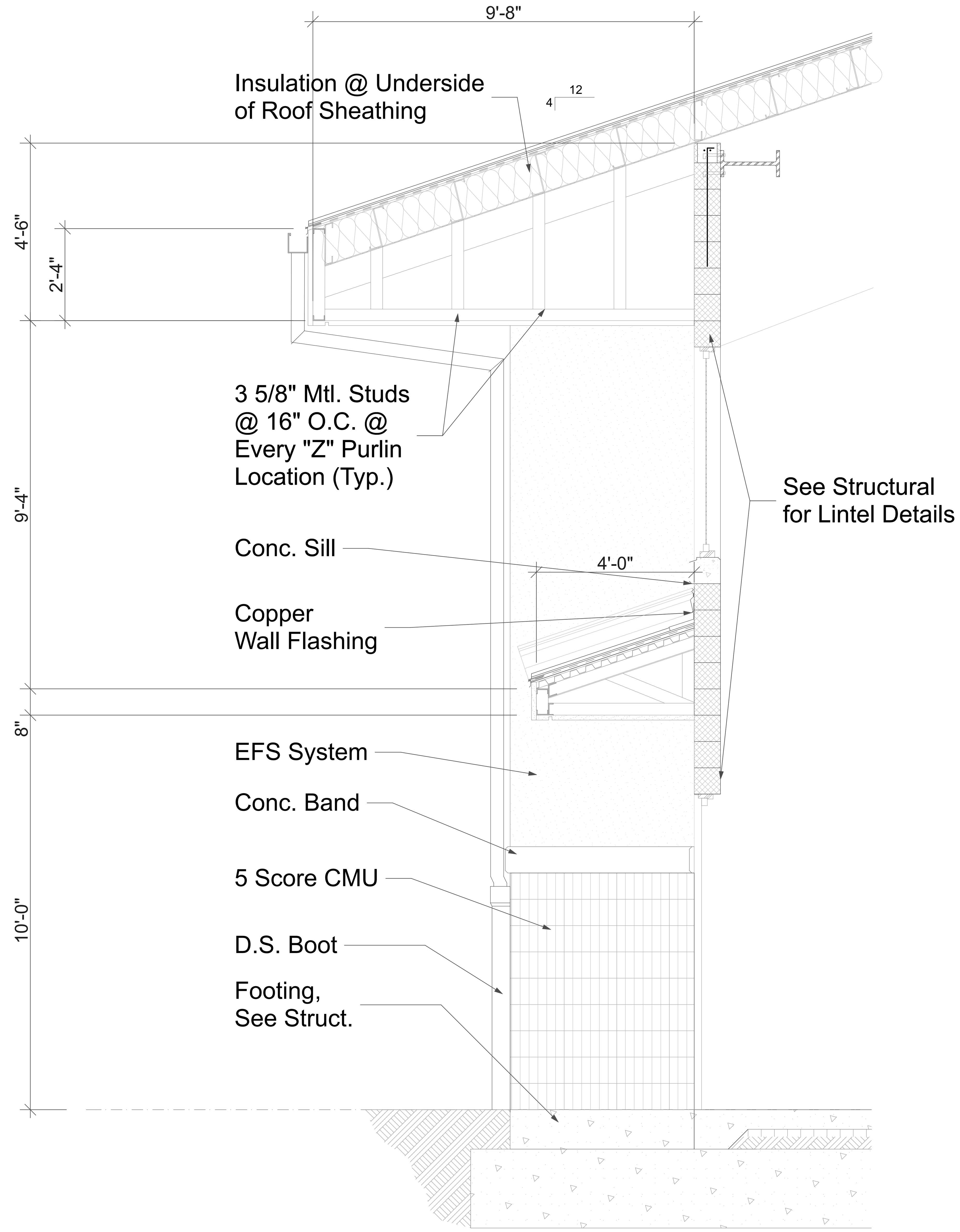

2 Wall Section at Gymnassium
SCALE: 1/2" = 1'-0"

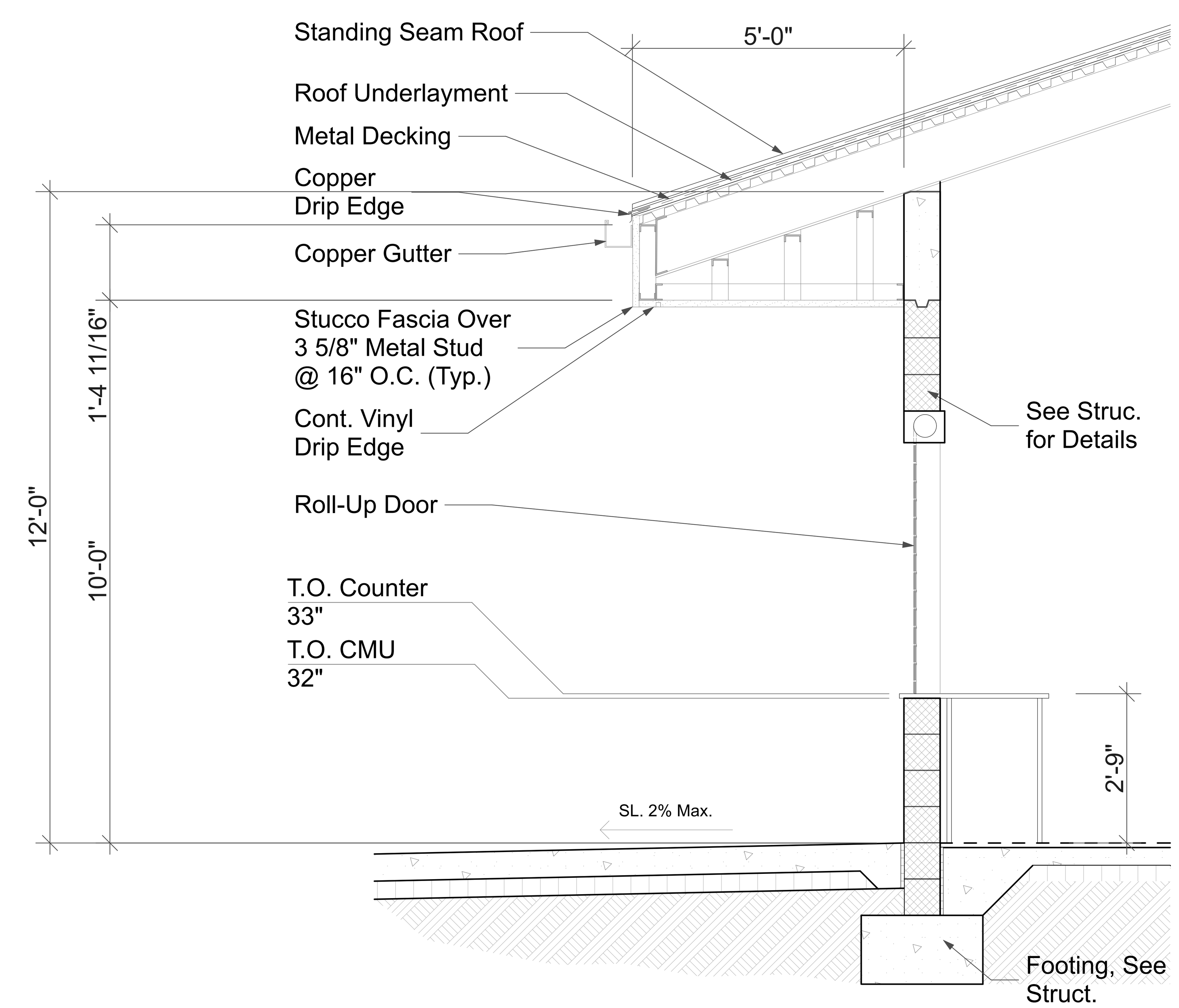

1 Wall Section at Kitchen
SCALE: 1/2" = 1'-0"

BID SET

2145 Wells Street, Suite 301
Wailuku, Hawaii 96793
Telephone: (808) 242-6900
Fax: (808) 986-8301
Email: nai@adcmaui.com
www.nishikawaarchitectsmaui.com

Nishikawa Architects, Inc.

© 2017 Nishikawa Architects, Inc.

THIS WORK WAS PREPARED BY ME OR UNDER MY SUPERVISION. CONSTRUCTION OF THIS PROJECT WILL BE UNDER MY OBSERVATION.

CLAYTON H. NISHIKAWA
LICENSED PROFESSIONAL ARCHITECT
No. 6710
HAWAII, U.S.A.
LICENSE EXPIRES 4/30/2018

South Maui Community Park
Recreation Center
Liloa Drive, Kihei, Hawaii
TMK: (2) 2-2-02 : 42
Job # P12/012

REVISIONS:

Wall Sections

A-9

SHEET:
PROJECT NO: #Pln
DATE: 11/01/16

ALL DOCUMENTS AND INSTRUMENTS PREPARED BY NISHIKAWA ARCHITECTS, INC. AS INSTRUMENTS OF SERVICE SHALL REMAIN THE PROPERTY OF NISHIKAWA ARCHITECTS, INC. AND IS PROTECTED BY COPYRIGHT LAW AND MAY NOT BE REPRODUCED WITHOUT PERMISSION.

A-9 Wall Sections : Plotted on 1/23/17 at 4:27 PM by Darwin Kiyabu, File Path: BIM Server: bimserver.local - BIM Server 18/1406 SMCPG/SMCP Recreation Center 18

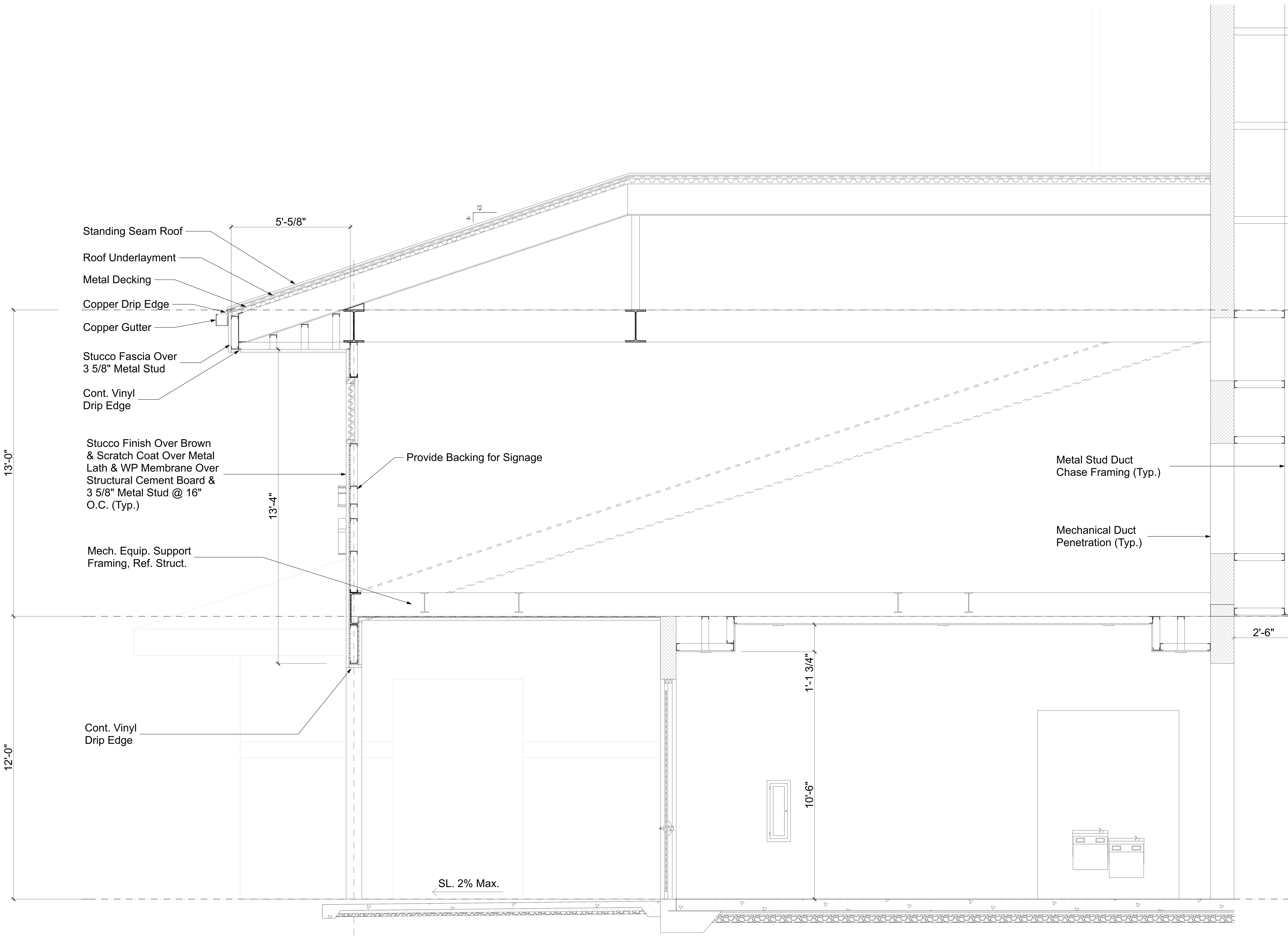

1 Wall Section at Entry
SCALE: 1/2" = 1'-0"

BID SET

THIS WORK WAS PREPARED BY ME OR UNDER MY SUPERVISION. CONSTRUCTION OF THIS PROJECT WILL BE UNDER MY OBSERVATION.

CLAYTON H. NISHIKAWA
LICENSED PROFESSIONAL ARCHITECT
No. 6710
HAWAII, U.S.A.
LICENSE EXPIRES 4/30/2018

Nishikawa Architects, Inc.
2145 Wells Street, Suite 301
Wailuku, Hawaii 96793
Telephone: (808) 242-6900
Fax: (808) 986-8301
Email: nai@adcmaui.com
www.nishikawaarchitectsmaui.com

© 2017 Nishikawa Architects, Inc.

South Maui Community Park
Recreation Center
Liloa Drive, Kihei, Hawaii
TMK: (2) 2-2-02 : 42
Job # P12/012

REVISIONS:

Wall Sections

A-9.1

SHEET:
PROJECT NO: #Pln
DATE: 11/01/16

ALL DOCUMENTS AND INSTRUMENTS PREPARED BY NISHIKAWA ARCHITECTS, INC. AS INSTRUMENTS OF SERVICE SHALL REMAIN THE PROPERTY OF NISHIKAWA ARCHITECTS, INC. AND IS PROTECTED BY COPYRIGHT LAW AND MAY NOT BE REPRODUCED WITHOUT PERMISSION.

A-9.1 Wall Sections : Plotted on 1/23/17 at 4:27 PM by Durwin Kiyabu. File Path: BIM Server: bimserver.local - BIM Server 18/1406 SMCPG/SMCP Recreation Center 18

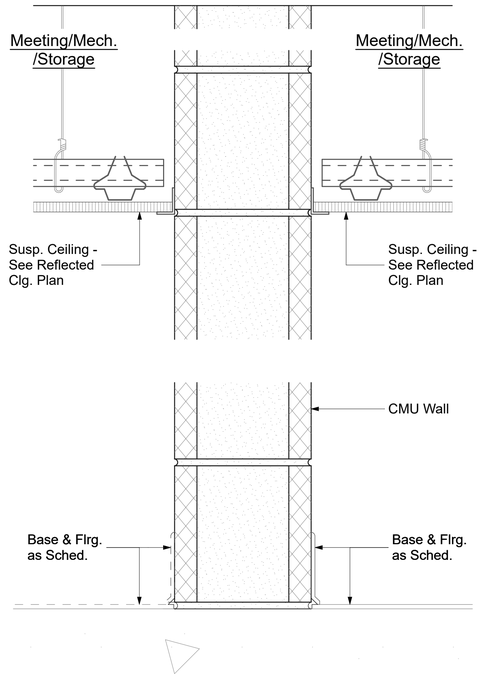

W1

1 Meeting/Storage Wall Type
SCALE: 3" = 1'-0"

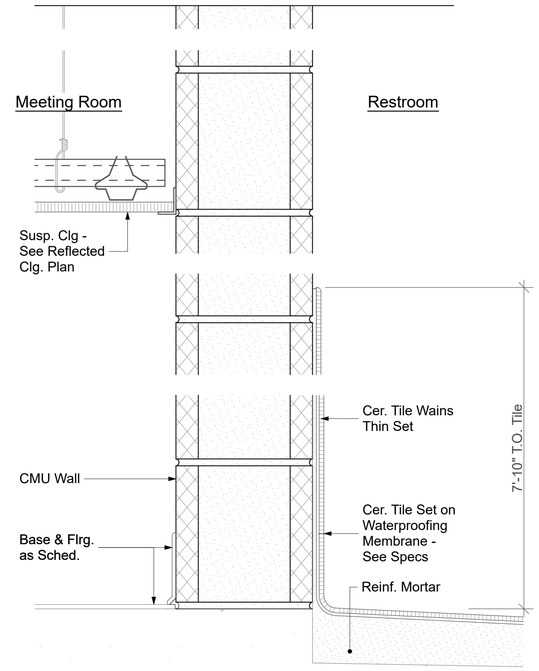

W2

2 Meeting/Restroom Wall Type
SCALE: 3" = 1'-0"

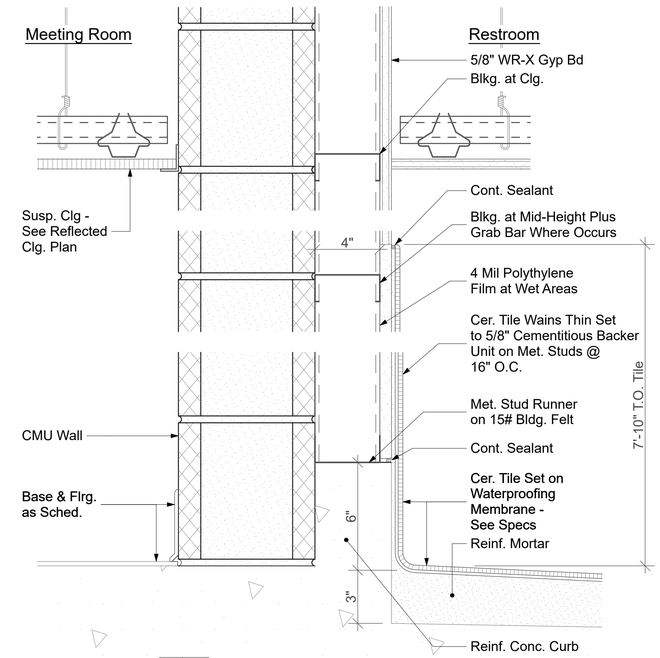

W3

3 Meeting/Furred Restroom Wall Type
SCALE: 3" = 1'-0"

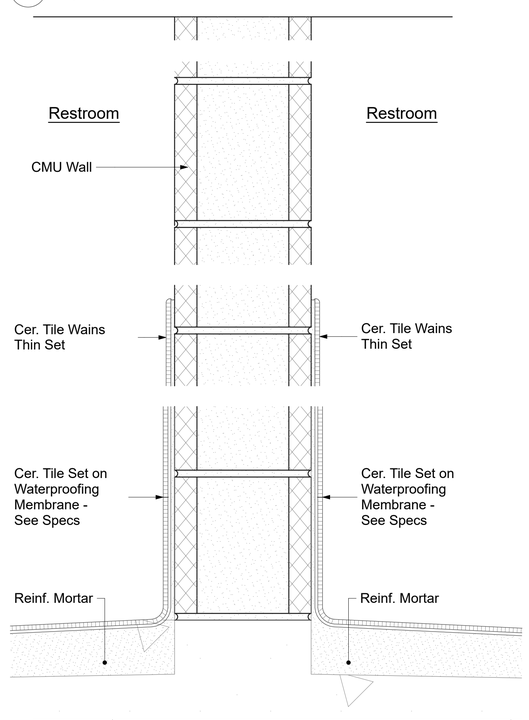

W4

4 Restroom/Restroom Wall Type
SCALE: 3" = 1'-0"

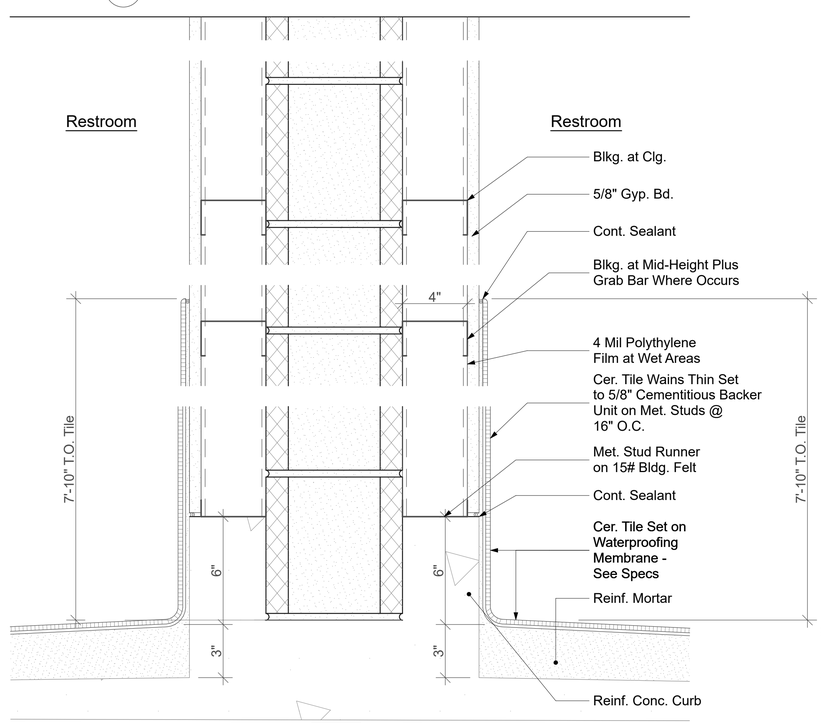

W5

5 Furred Restroom/Furred Restroom Wall Type
SCALE: 3" = 1'-0"

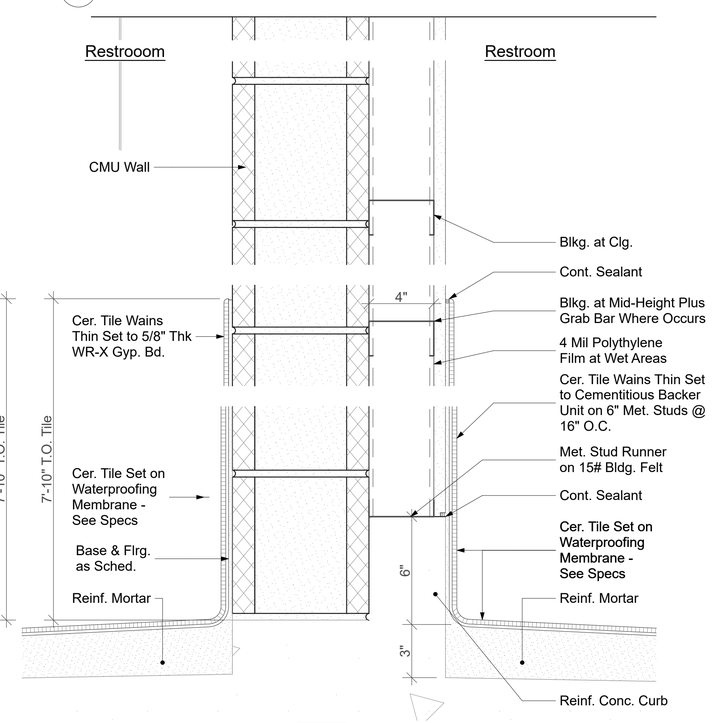

W6

6 Restroom/Furred Wall Type
SCALE: 3" = 1'-0"

BID SET

2145 Wells Street, Suite 301
Wailuku, Hawaii 96793
Telephone: (808) 242-6800
Fax: (808) 986-8301
Email: nai@alcmaui.com
www.nishikawaarchitectsmaui.com

Nishikawa Architects, Inc.

© 2017 Nishikawa Architects, Inc.

CLAYTON H. NISHIKAWA
LICENSED PROFESSIONAL ARCHITECT
No. 6716
HAWAII

THIS WORK WAS PREPARED BY ME OR UNDER MY SUPERVISION. CONSTRUCTION OF THIS PROJECT WILL BE UNDER MY OBSERVATION.

LAST DAY FOR OBSERVATION

South Maui Community Park
Recreation Center
Liloa Drive, Kihei, Hawaii
TMK: (2) 2-2-02 : 42
Job # P12/012

REVISIONS:

Wall Types

A-10

SHEET:
PROJECT NO: #Pln
DATE: 11/01/16

ALL DOCUMENTS AND INSTRUMENTS PREPARED BY NISHIKAWA ARCHITECTS, INC. AS INSTRUMENTS OF SERVICE SHALL REMAIN THE PROPERTY OF NISHIKAWA ARCHITECTS, INC. AND IS PROTECTED BY COPYRIGHT LAW AND MAY NOT BE REPRODUCED WITHOUT PERMISSION.

A-10 Wall Types - Plotted on 12/21/17 at 4:27 PM by Derwin Kiyabu - File Path: BIM Server: bimserver.local - BIM Server 18\1406 SMCPC\SMCP Recreation Center 18

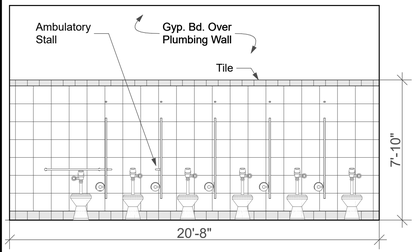

1 01 Rm. 123 Women's Restroom
SCALE: 1/4" = 1'-0"

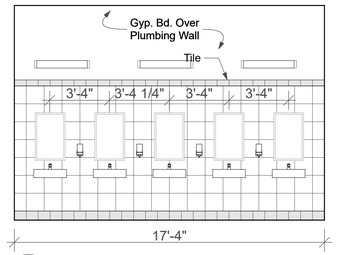

2 02 Rm. 123 Women's Restroom
SCALE: 1/4" = 1'-0"

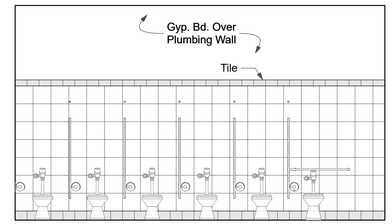

3 03 Rm. 123 Women's Restroom
SCALE: 1/4" = 1'-0"

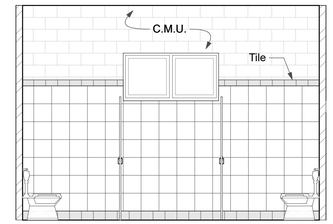

4 04 Rm. 123 Women's Restroom
SCALE: 1/4" = 1'-0"

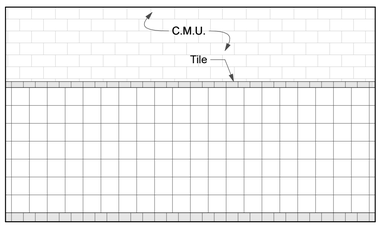

5 01 Rm. 122 Women's Shower
SCALE: 1/4" = 1'-0"

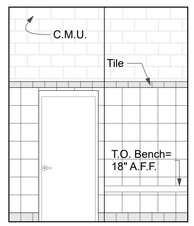

6 02 Rm. 122 Women's Shower
SCALE: 1/4" = 1'-0"

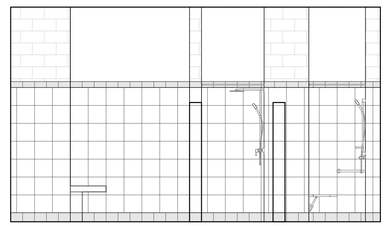

7 03 Rm. 122 Women's Shower
SCALE: 1/4" = 1'-0"

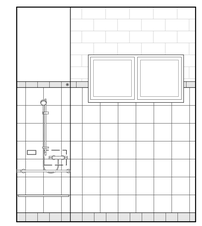

8 04 Rm. 122 Women's Shower
SCALE: 1/4" = 1'-0"

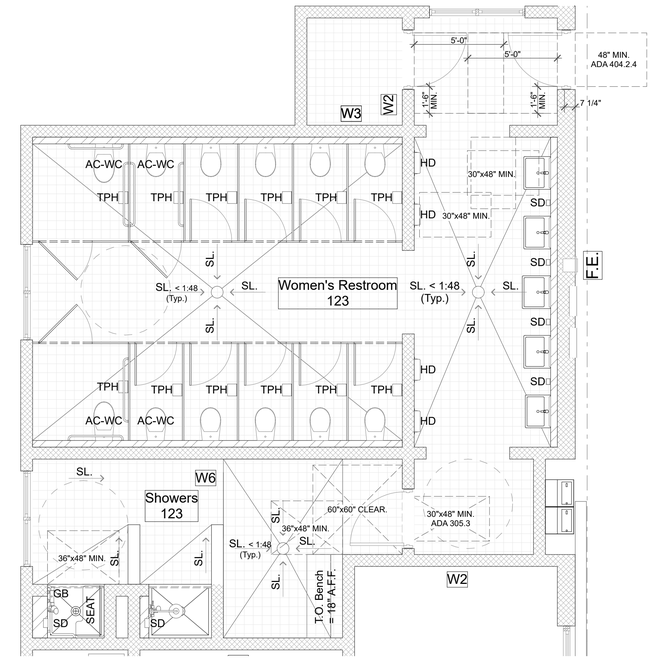

Women's Restrooms/Showers

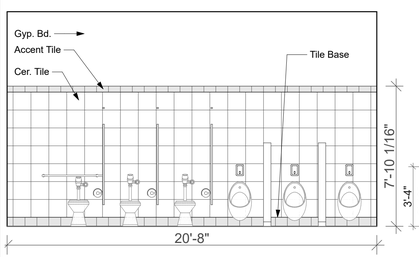

9 01 Rm. 113 Mens Restroom
SCALE: 1/4" = 1'-0"

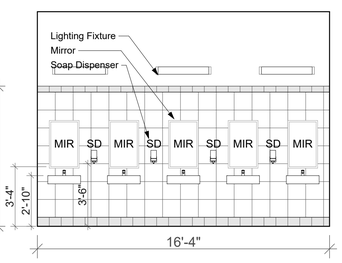

10 02 Rm. 113 Restroom
SCALE: 1/4" = 1'-0"

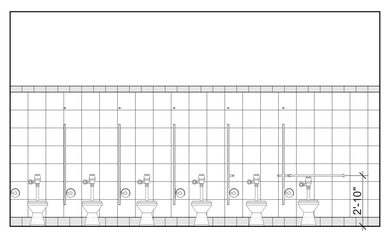

11 03 Rm. 113 Mens Restroom
SCALE: 1/4" = 1'-0"

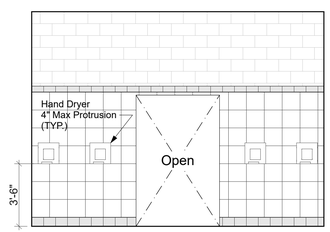

12 04 Rm. 113 Mens Restroom
SCALE: 1/4" = 1'-0"

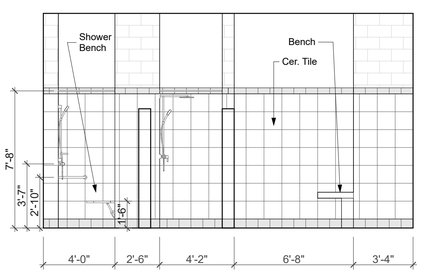

13 01 Rm. 114 Men's Shower
SCALE: 1/4" = 1'-0"

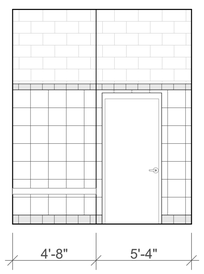

14 02 Rm. 114 Men's Shower
SCALE: 1/4" = 1'-0"

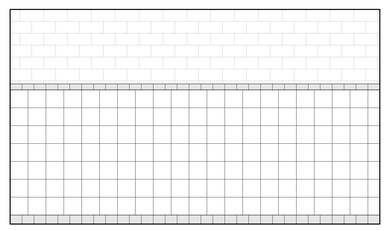

15 03 Rm. 114 Men's Shower
SCALE: 1/4" = 1'-0"

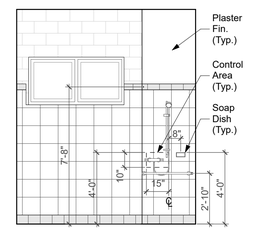

16 04 Rm. 114 Men's Shower
SCALE: 1/4" = 1'-0"

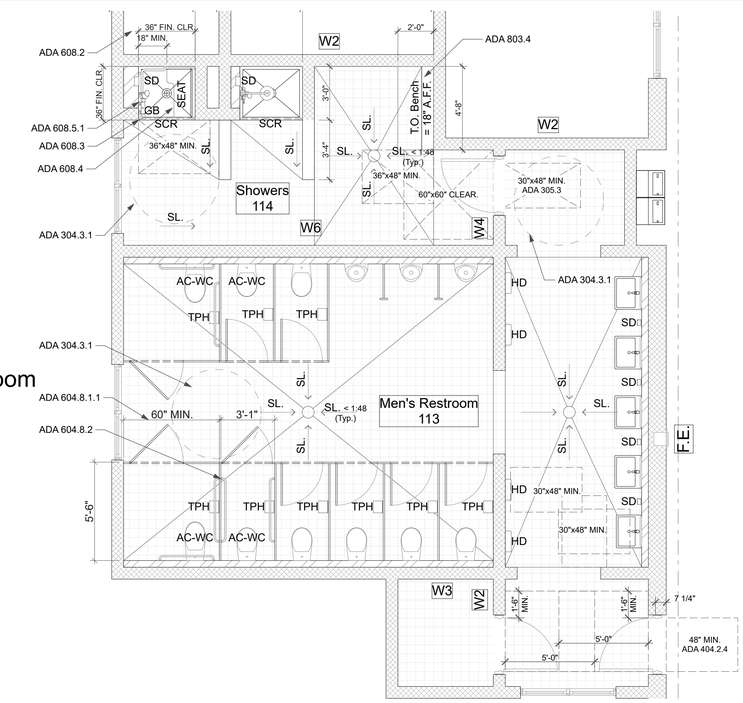

Men's Restrooms/Showers

BID SET

2145 Wells Street, Suite 301
Wailuku, Hawaii 96793
Telephone: (808) 242-6800
Fax: (808) 986-8301
Email: nai@alcmaui.com
www.nishikawaarchitectsmaui.com

Nishikawa Architects, Inc.

© 2017 Nishikawa Architects, Inc.

CLAYTON H. NISHIKAWA LICENSED PROFESSIONAL ARCHITECT No. 6716 HAWAII

THIS WORK WAS PREPARED BY ME OR UNDER MY SUPERVISION. CONSTRUCTION OF THIS PROJECT WILL BE UNDER MY OBSERVATION.

South Maui Community Park
Recreation Center
Liloa Drive, Kihei, Hawaii
TMK: (2) 2-2-02 : 42
Job # P12/012

REVISIONS:

Detailed Plans/Interior Elev

A-11

SHEET:
PROJECT NO: #Pln
DATE: 11/01/16

ALL DOCUMENTS AND INSTRUMENTS PREPARED BY NISHIKAWA ARCHITECTS, INC. AS INSTRUMENTS OF SERVICE SHALL REMAIN THE PROPERTY OF NISHIKAWA ARCHITECTS, INC. AND ARE PROTECTED BY COPYRIGHT LAW AND MAY NOT BE REPRODUCED WITHOUT PERMISSION.

A-11 Detailed Plans/Interior Elev - Plotted on 1/23/17 at 4:27 PM by Darwin Kiyabu. File Path: BIM Server /BIM Server bimserver.local - BIM Server 18/1406 SMCPC-SMCP Recreation Center 18

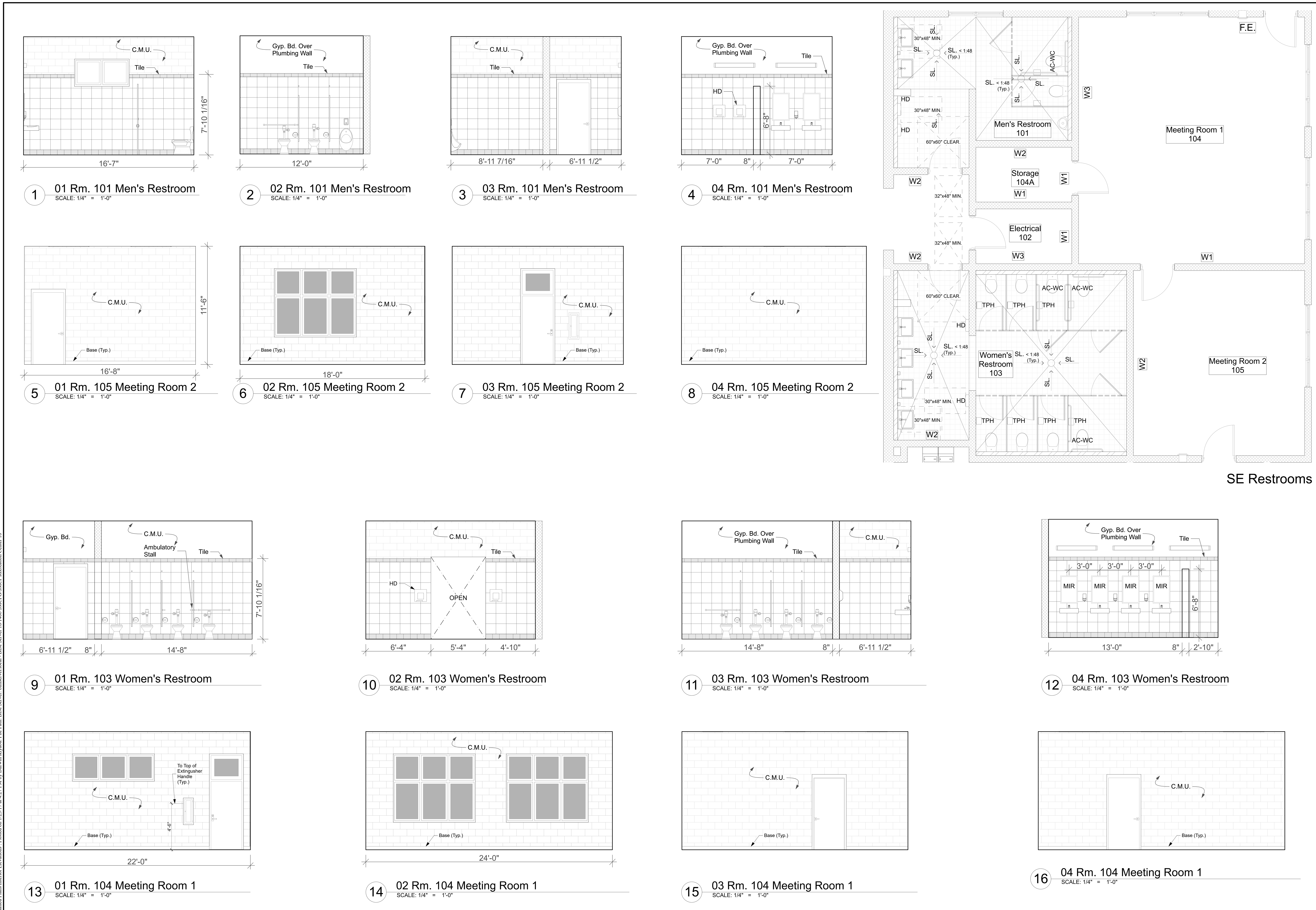

BID SET

2145 Wells Street, Suite 301
Wailuku, Hawaii 96793
Telephone: (808) 242-6900
Fax: (808) 986-8301
Email: nai@adcmaui.com
www.nishikawaarchitectsmaui.com

Nishikawa Architects, Inc.

© 2017 Nishikawa Architects, Inc.

CLAYTON H. NISHIKAWA
LICENSED PROFESSIONAL ARCHITECT
No. 6710
HAWAII, U.S.A.
LICENSE EXPIRES 4/30/2018

THIS WORK WAS PREPARED BY ME OR UNDER MY SUPERVISION. CONSTRUCTION OF THIS PROJECT WILL BE UNDER MY OBSERVATION.

South Maui Community Park
Recreation Center

Liloa Drive, Kihei, Hawaii
TMK: (2) 2-2-02 : 42
Job # P12/012

REVISIONS:

Detailed Plans/Interior Elevations

A-12

SHEET:
PROJECT NO: #Pln
DATE: 11/01/16

ALL DOCUMENTS AND INSTRUMENTS PREPARED BY NISHIKAWA ARCHITECTS, INC. AS INSTRUMENTS OF SERVICE SHALL REMAIN THE PROPERTY OF NISHIKAWA ARCHITECTS, INC. AND IS PROTECTED BY COPYRIGHT LAW AND MAY NOT BE REPRODUCED WITHOUT PERMISSION.

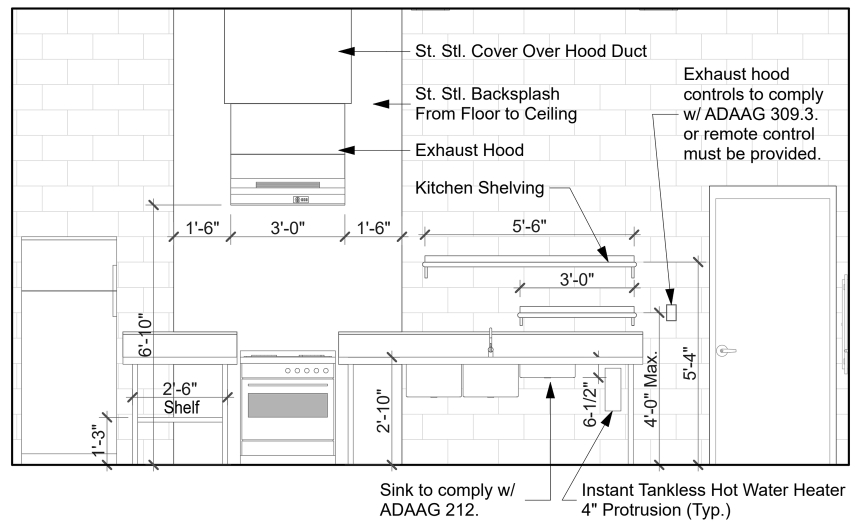

1 01 Rm. 112 Kitchen
SCALE: 1/4" = 1'-0"

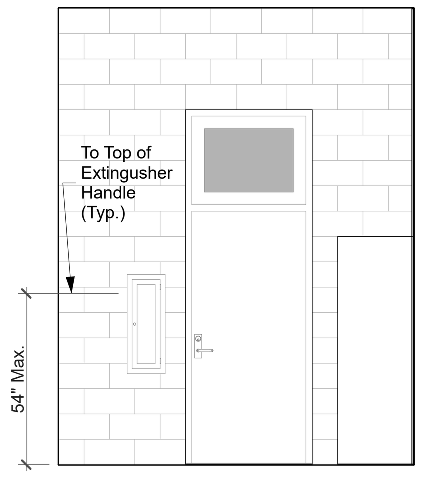

2 02 Rm. 112 Kitchen
SCALE: 1/4" = 1'-0"

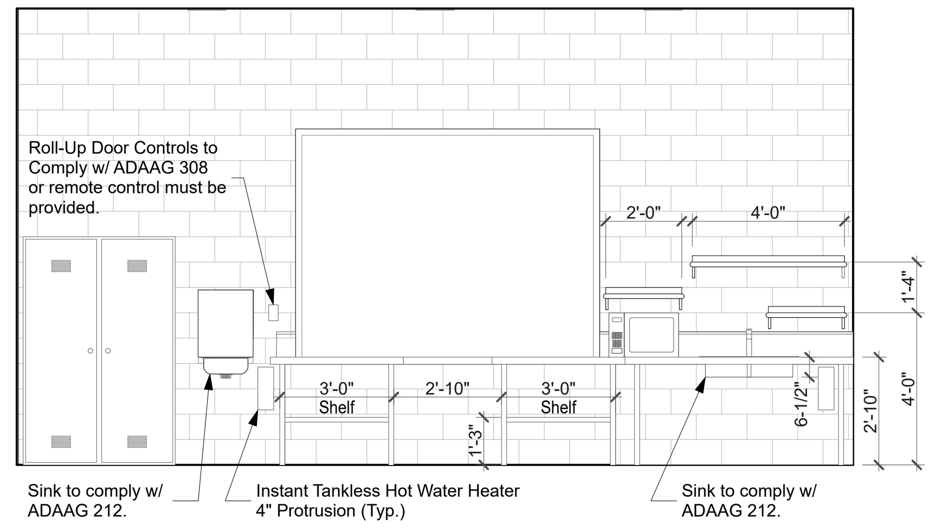

3 03 Rm. 112 Kitchen
SCALE: 1/4" = 1'-0"

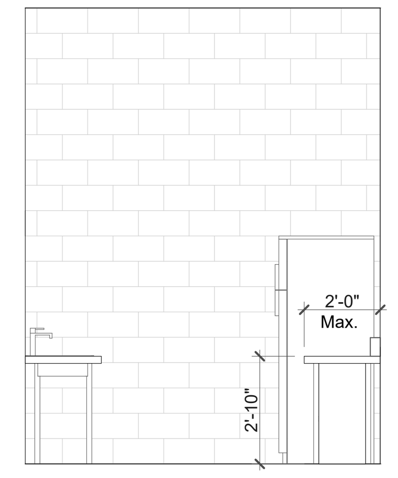

4 04 Rm. 112 Kitchen
SCALE: 1/4" = 1'-0"

SW Restrooms/Kitchen

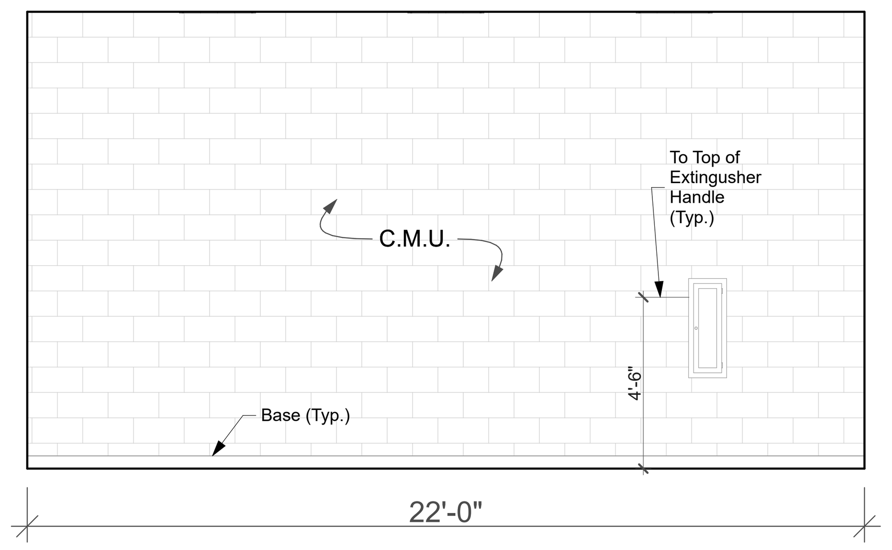

5 01 Rm. 111 Meeting Room 3
SCALE: 1/4" = 1'-0"

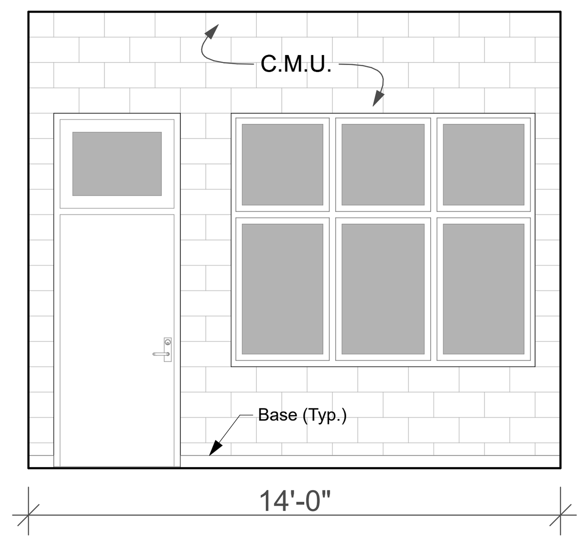

6 02 Rm. 111 Meeting Room 3
SCALE: 1/4" = 1'-0"

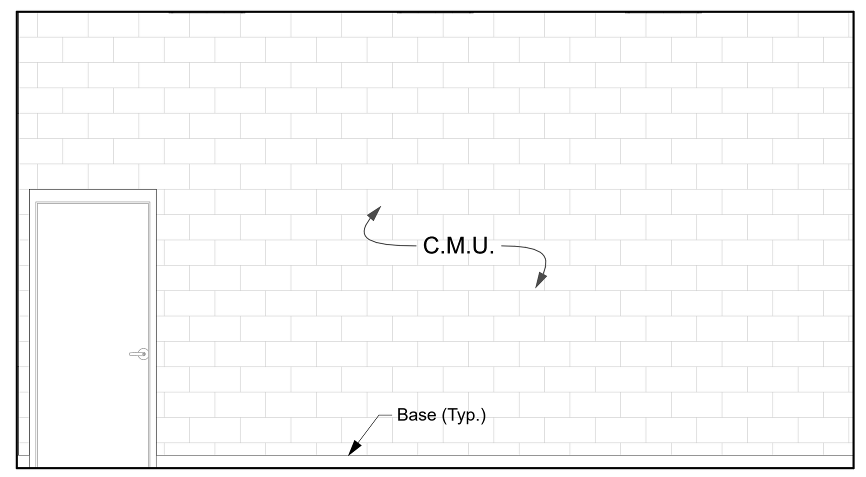

7 03 Rm. 111 Meeting Room 3
SCALE: 1/4" = 1'-0"

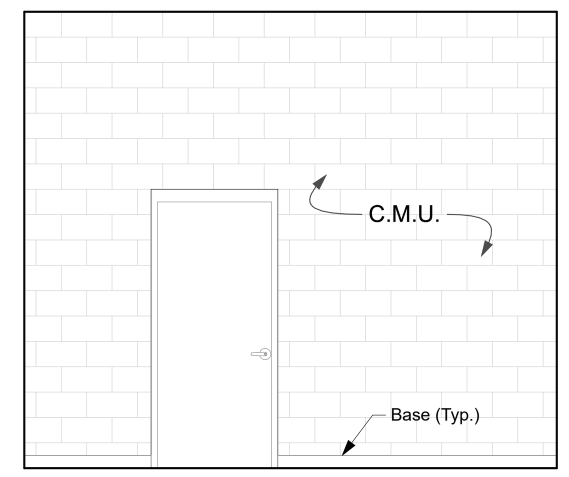

8 04 Rm. 111 Meeting Room 3
SCALE: 1/4" = 1'-0"

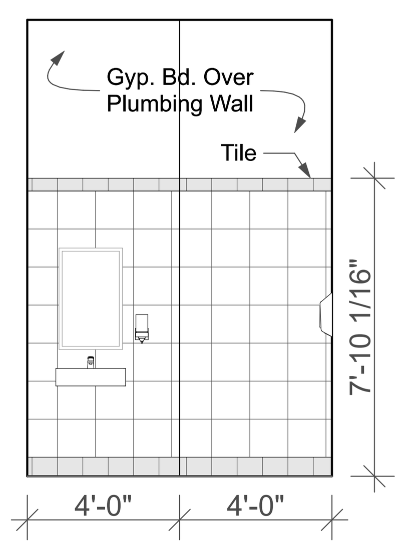

9 01 Rm. 110 Ext. Men's Restroom
SCALE: 1/4" = 1'-0"

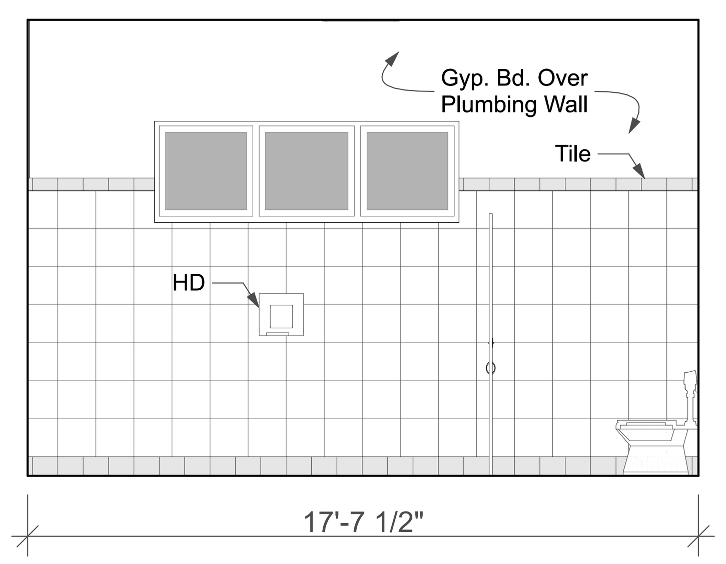

10 02 Rm. 110 Ext. Men's Restroom
SCALE: 1/4" = 1'-0"

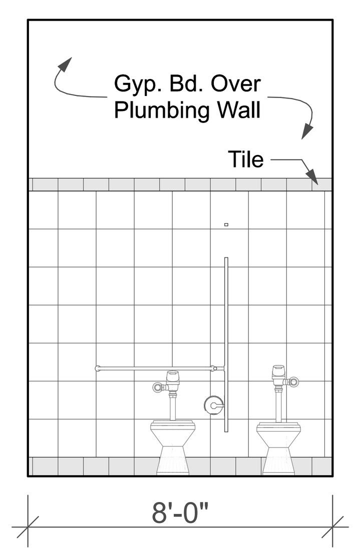

11 03 Rm. 110 Ext. Men's Restroom
SCALE: 1/4" = 1'-0"

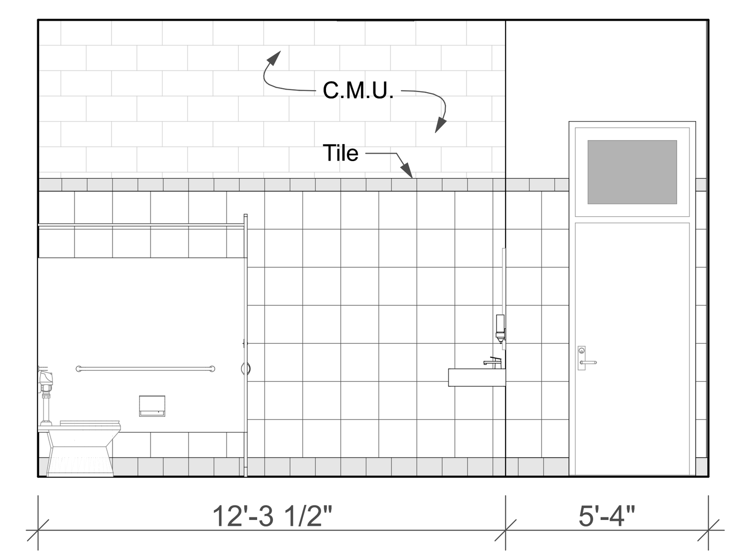

12 04 Rm. 110 Ext. Men's Restroom
SCALE: 1/4" = 1'-0"

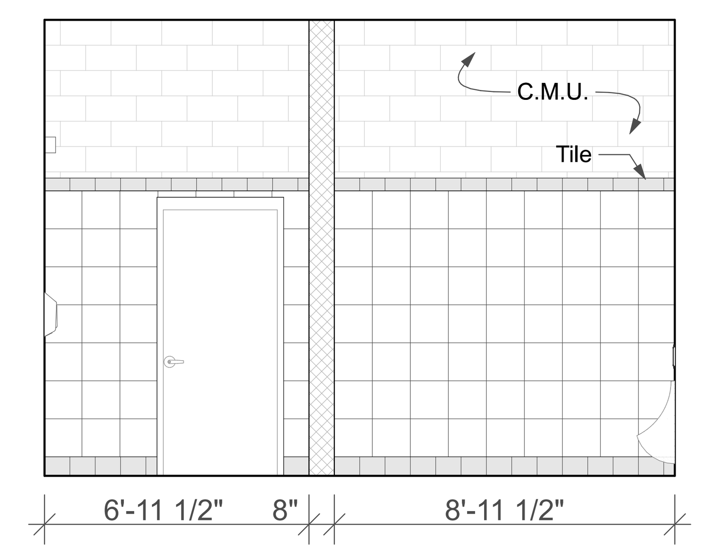

13 01 Rm. 108 Men's Restroom
SCALE: 1/4" = 1'-0"

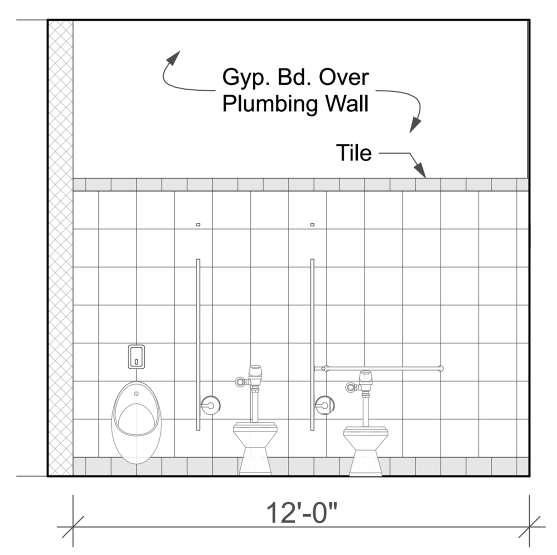

14 02 Rm. 108 Men's Restroom
SCALE: 1/4" = 1'-0"

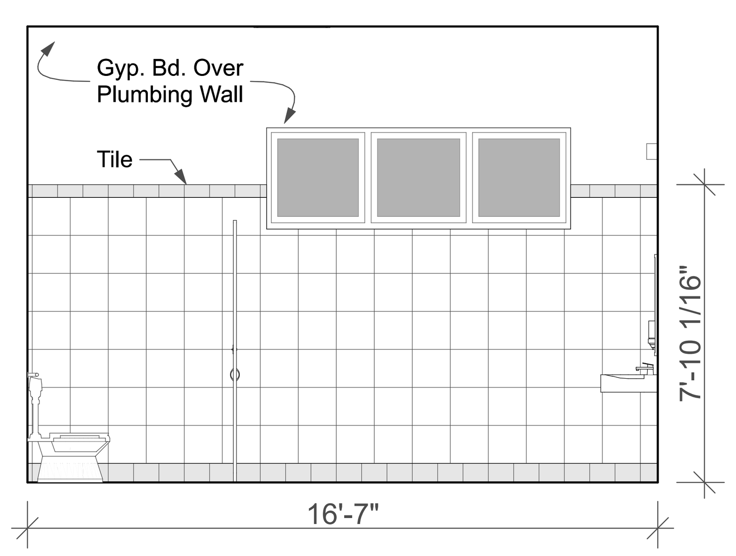

15 03 Rm. 108 Men's Restroom
SCALE: 1/4" = 1'-0"

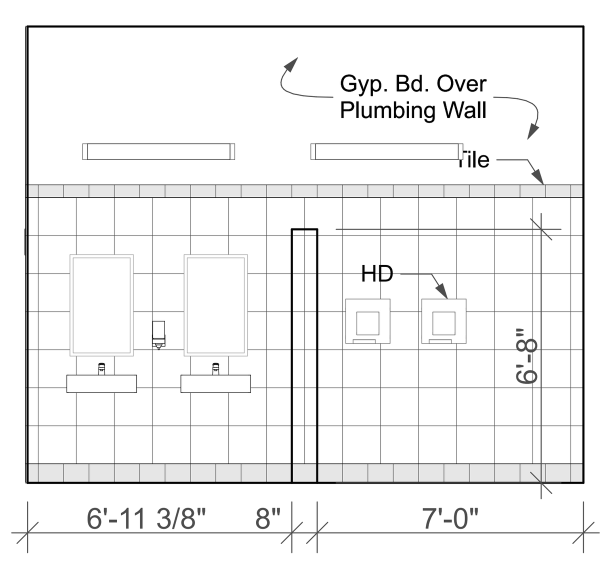

16 04 Rm. 108 Men's Restroom
SCALE: 1/4" = 1'-0"

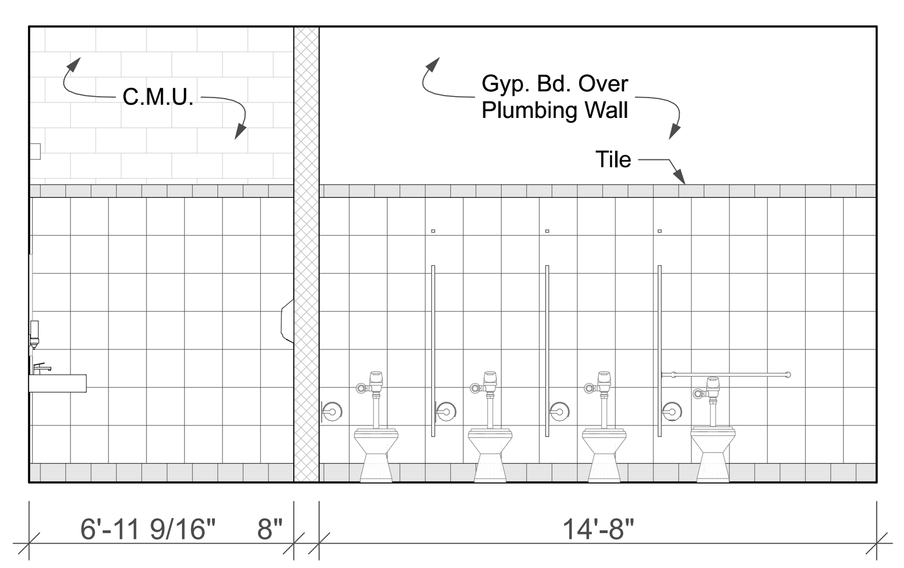

17 01 Rm. 106 Women's Restroom
SCALE: 1/4" = 1'-0"

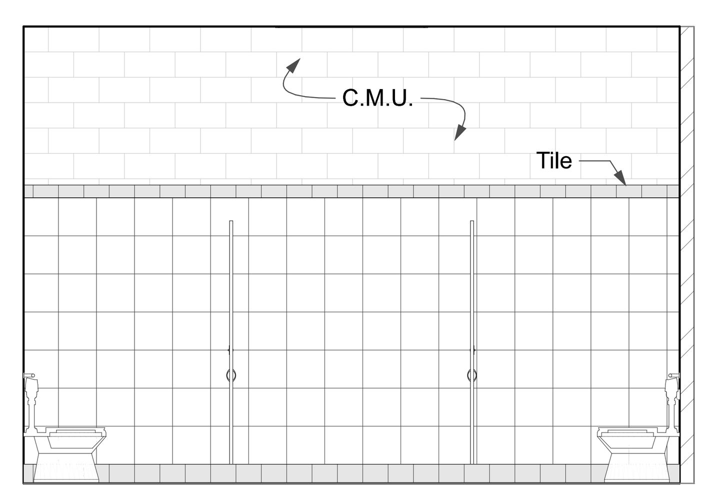

18 02 Rm. 106 Women's Restroom
SCALE: 1/4" = 1'-0"

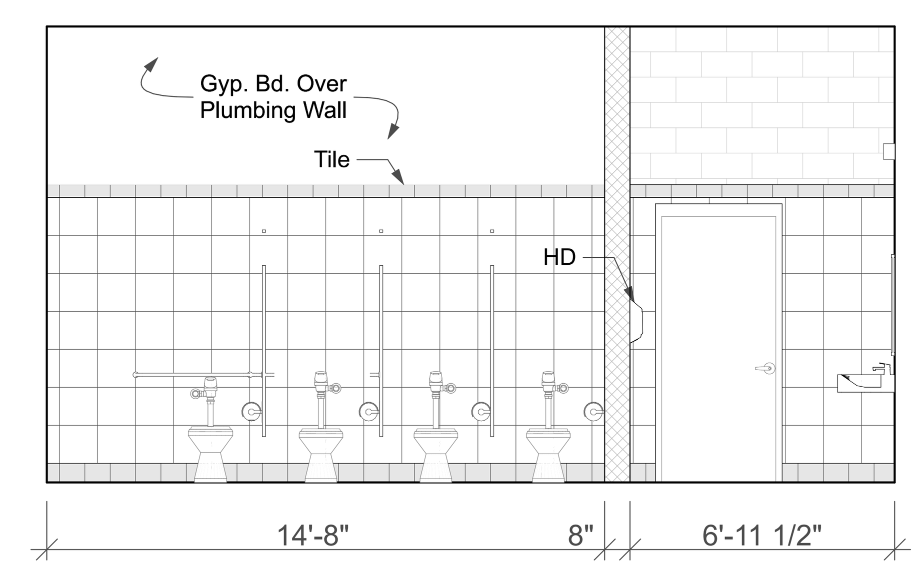

19 03 Rm. 106 Women's Restroom
SCALE: 1/4" = 1'-0"

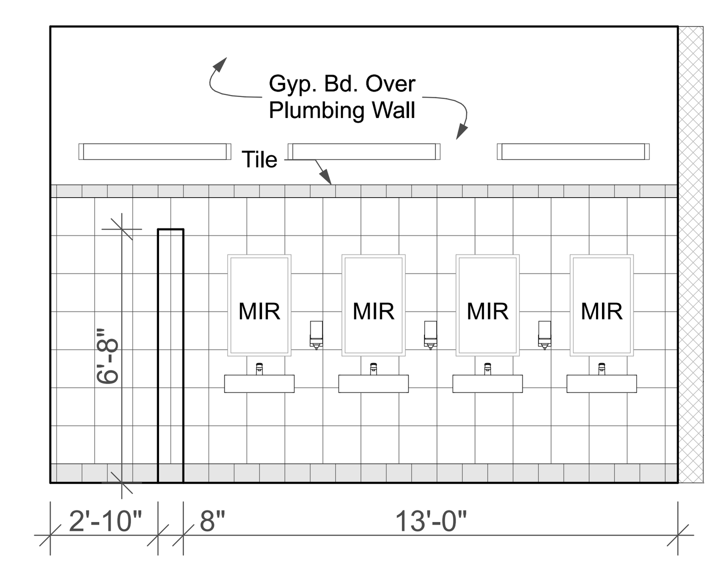

20 04 Rm. 106 Women's Restroom
SCALE: 1/4" = 1'-0"

BID SET

Nishikawa Architects, Inc.
2145 Wells Street, Suite 301
Wailuku, Hawaii 96793
Telephone: (808) 242-6900
Fax: (808) 986-8301
Email: nai@nishimaui.com
www.nishikawaarchitectsmaui.com

© 2017 Nishikawa Architects, Inc.

CLAYTON H. NISHIKAWA
LICENSED PROFESSIONAL ARCHITECT
No. 6710

THIS WORK WAS PREPARED BY ME OR UNDER MY SUPERVISION. CONSTRUCTION OF THIS PROJECT WILL BE UNDER MY OBSERVATION.

South Maui Community Park
Recreation Center
Liloa Drive, Kihei, Hawaii
TMK: (2) 2-2-02 : 42
Job # P12/012

REVISIONS:

Detailed Plans/Interior Elevat

A-13

SHEET:
PROJECT NO: #Pln
DATE: 11/01/16

ALL DOCUMENTS AND INSTRUMENTS PREPARED BY NISHIKAWA ARCHITECTS, INC. AS INSTRUMENTS OF SERVICE SHALL REMAIN THE PROPERTY OF NISHIKAWA ARCHITECTS, INC. AND IS PROTECTED BY COPYRIGHT LAW AND MAY NOT BE REPRODUCED WITHOUT PERMISSION.

A-13 Detailed Plans/Interior Elevations : Plotted on 1/23/17 at 4:27 PM by Darwin Kiyabu. File Path: BIM Server: bimserver.local - BIM Server 18/1406 SMCP/SMCP Recreation Center 18

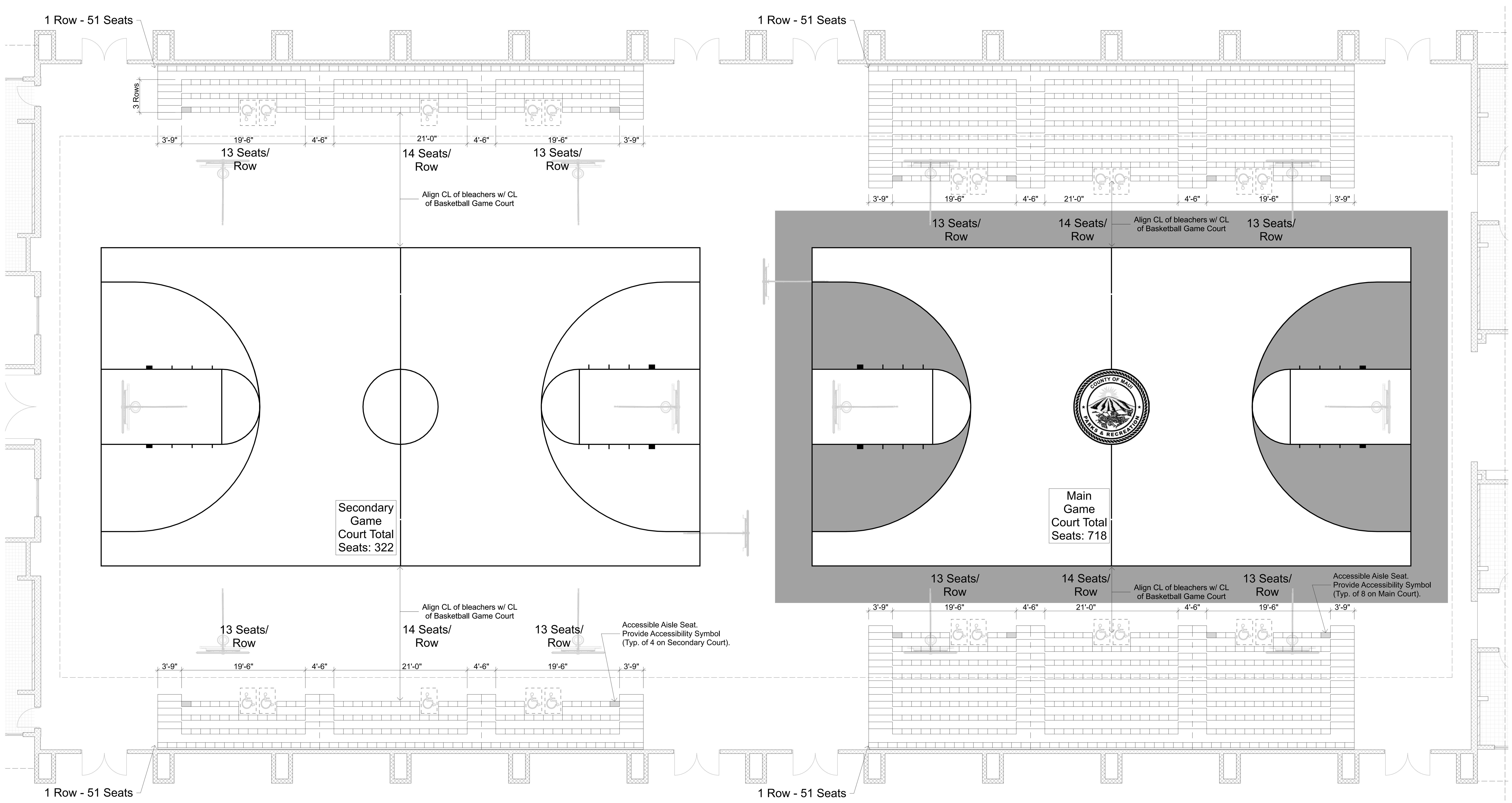

1 Enlarged Bleacher Plan
SCALE: 1/8" = 1'-0"

Secondary Court Seating Notes:

Seating to comply with ADAAG 221:
- 161 Seats Each Side
- 5 Wheelchair Spaces Required on Each Side (5 Spaces provided)

Seating to comply with ADAAG 221.4 Designated Aisle Seats:
- 18 Aisle Seats Each Side
- 1 Designated Aisle Seats Required on Each Side (2 Designated Aisle Seats Provided)

Seating to comply with ADAAG 802.4.2 Identification
Each designated aisle seat shall be identified by a sign or marker.

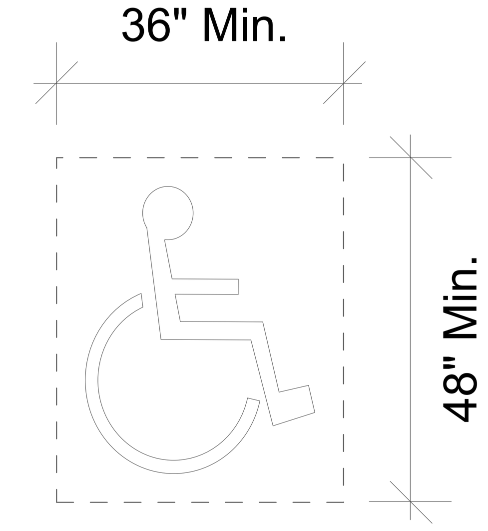

Wheelchair Space
ADAAG 802.1

Main Court Seating Notes:

Seating to comply with ADAAG 221:
- 359 Seats Each Side
- 6 Wheelchair Spaces Required on Each Side (6 Spaces provided)

Seating to comply with ADAAG 221.4 Designated Aisle Seats:
- 48 Aisle Seats Each Side
- 3 Designated Aisle Seats Required on Each Side (4 Designated Aisle Seats Provided)

Seating to comply with ADAAG 802.4.2 Identification
Each designated aisle seat shall be identified by a sign or marker.

BID SET

Nishikawa Architects, Inc.
2145 Wells Street, Suite 301
Wailuku, Hawaii 96793
Telephone: (808) 242-6900
Fax: (808) 986-8301
Email: nai@adcmaui.com
www.nishikawaarchitectsmaui.com

© 2017 Nishikawa Architects, Inc.

THIS WORK WAS PREPARED BY ME OR UNDER MY SUPERVISION. CONSTRUCTION OF THIS PROJECT WILL BE UNDER MY OBSERVATION.

CLAYTON H. NISHIKAWA — LICENSED PROFESSIONAL ARCHITECT No. 6710 — HAWAII, U.S.A.
LICENSE EXPIRES 4/30/2018

South Maui Community Park
Recreation Center
Liloa Drive, Kihei, Hawaii
TMK: (2) 2-2-02 : 42
Job # P12/012

REVISIONS:

Enlarged Bleacher Plan

A-14

SHEET:
PROJECT NO: #Pln
DATE: 11/01/16

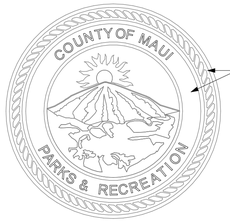

Note: Match all colors of 'County of Maui Parks & Recreation' seal unless otherwise noted.

Area behind to be left blank to show wood grain of court floor.

5 Detail at Gym Floor County Logo

SCALE: 1/4" = 1'-0"

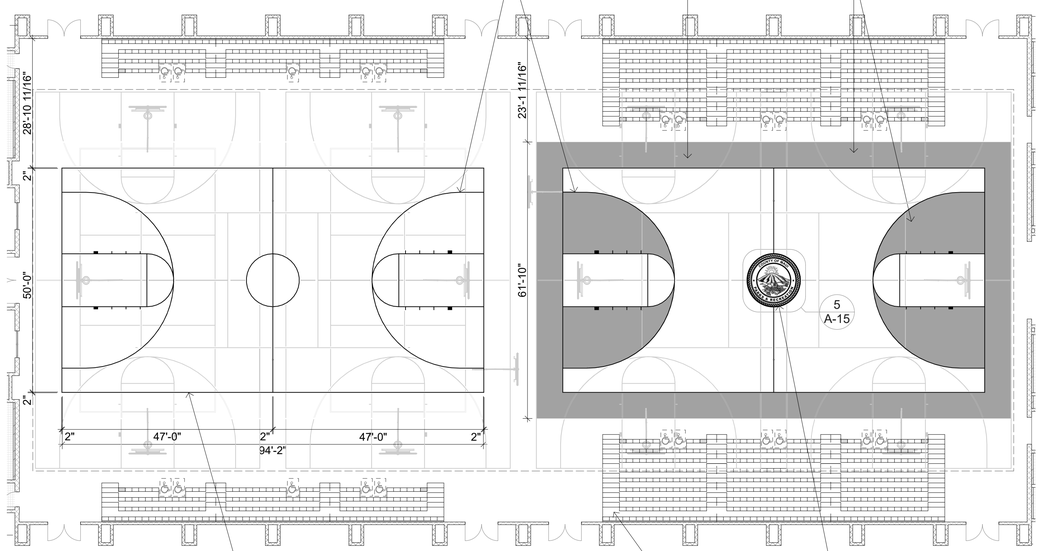

4 Game Basketball Court

SCALE: 1/16" = 1'-0"

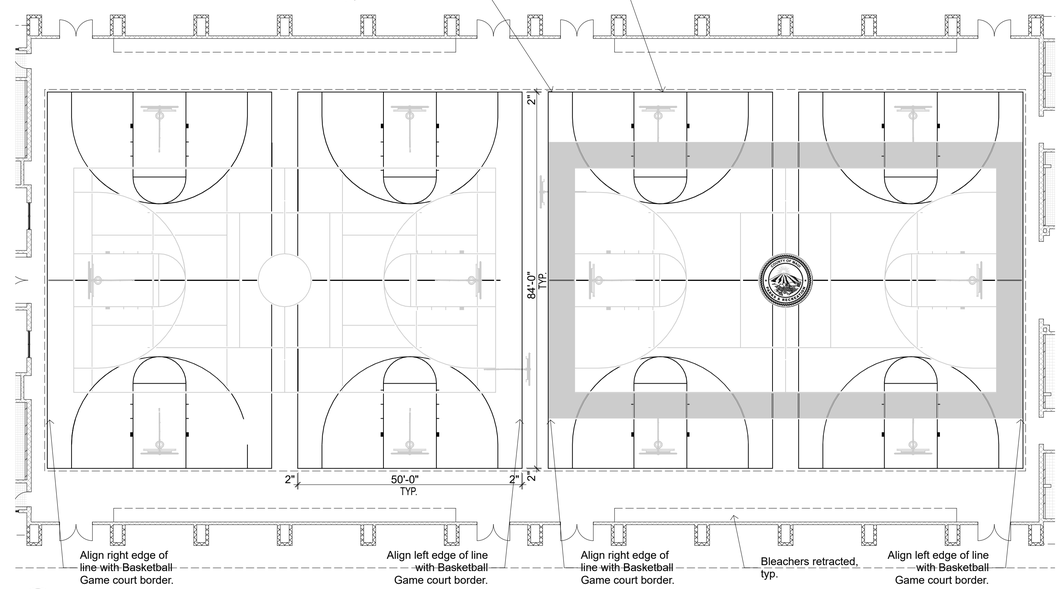

3 Practice Basketball Court

SCALE: 1/16" = 1'-0"

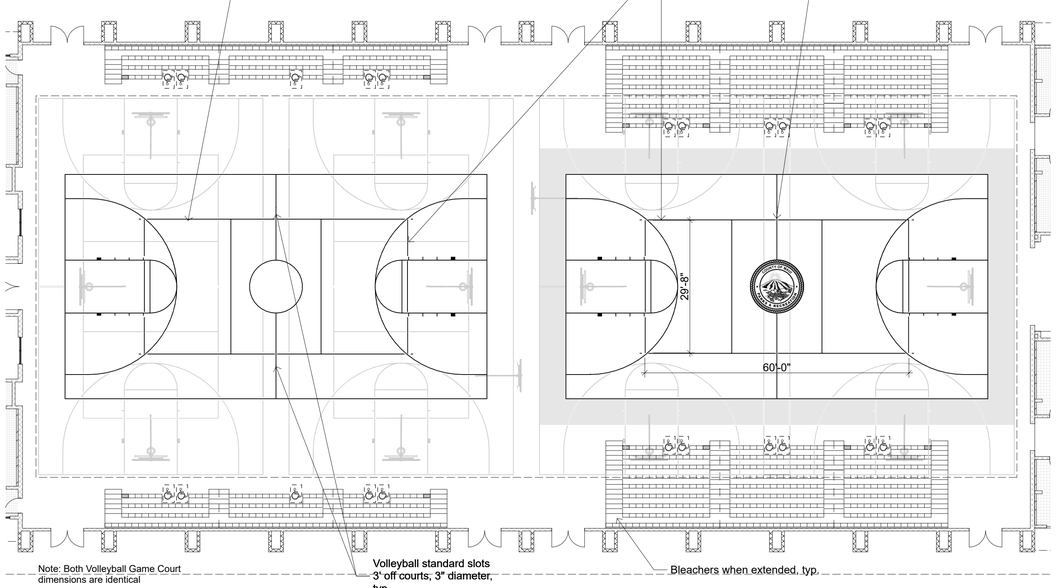

2 Game Volleyball Court

SCALE: 1/16" = 1'-0"

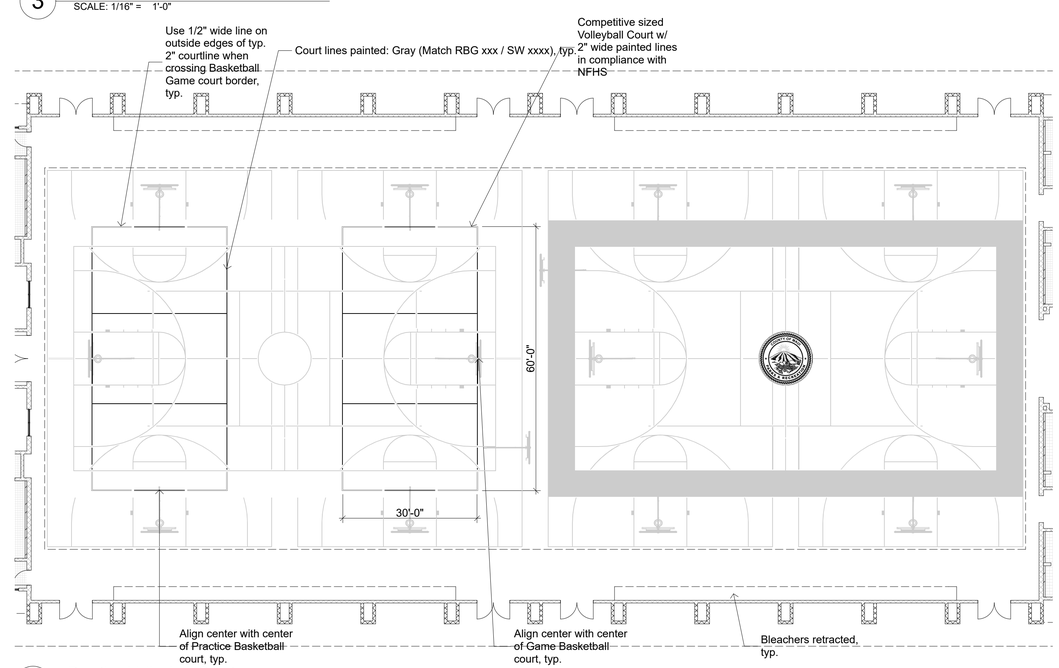

1 Practice Volleyball Court

SCALE: 1/16" = 1'-0"

BID SET

2145 Wells Street, Suite 301
Wailuku, Hawaii 96793
Telephone: (808) 242-6800
Fax: (808) 986-8301
Email: nai@alcmaui.com
www.nishikawaarchitectsmaui.com

Nishikawa Architects, Inc.

© 2017 Nishikawa Architects, Inc.

CLAYTON H. NISHIKAWA
LICENSED PROFESSIONAL ARCHITECT
No. 6716
HAWAII, U.S.A.

THIS WORK WAS PREPARED BY ME OR UNDER MY SUPERVISION. CONSTRUCTION OF THIS PROJECT WILL BE UNDER MY OBSERVATION.

South Maui Community Park
Recreation Center

Liloa Drive, Kihei, Hawaii

TMK: (2) 2-2-02 : 42

Job # P12/012

REVISIONS:

Gym Striping - Court Plans

A-15

SHEET:
PROJECT NO: #Pln
DATE: 11/01/16

ALL DOCUMENTS AND INSTRUMENTS PREPARED BY NISHIKAWA ARCHITECTS, INC. AS INSTRUMENTS OF SERVICE SHALL REMAIN THE PROPERTY OF NISHIKAWA ARCHITECTS, INC. AND IS PROTECTED BY COPYRIGHT LAW AND MAY NOT BE REPRODUCED WITHOUT PERMISSION.

A-15 Gym Striping - Court Plans - Plotted on 1/23/17 at 4:27 PM by Darwin Kiyabu. File Path: BIM Server: bimserver.local - BIM Server 18\1406 SMCPG\SMCP Recreation Center 18

MATERIAL SCHEDULE

MATERIAL KEY	MATERIAL DESCRIPTION	SOURCE/ MANUFACTURER	SIZE / PATTERN / FINISH	COLOR / PRODUCT NO.	REMARKS
AT-1	ACOUSTICAL TILE	ARMSTRONG CO	24" X 48"	FINE FISSURED-1714 (WHITE)	
CT-1	CERAMIC TILE (FLOOR)	DAL-TILE	12" X 12" PORCELAIN UNPOLISHED	PORCELATO VERDE ALGHERO	PROVIDE CORRESPONDING TRIMS
CT-2	CERAMIC TILE (FLOOR)	DAL-TILE	8" X 8" PORCELAIN UNPOLISHED	PORCELATO VERDE ALGHERO	PROVIDE CORRESPONDING TRIMS
CT-3	CERAMIC TILE (WALL)	DAL-TILE	12" X 12" PORCELAIN POLISHED	PORCELATO BIANCO ALPI	PROVIDE CORRESPONDING TRIMS
CT-4	CERAMIC TILE (WALL)	DAL-TILE	4" X 8" SBN	PORCELATO VERDE ALGHERO	PROVIDE CORRESPONDING TRIMS
CT-5	CERAMIC TILE (BASE)	DAL-TILE	6" X 8" CV BASE	PORCELATO VERDE ALGHERO	PROVIDE CORRESPONDING TRIMS
GT-1	GROUT	MAPEI	-	(SUBMIT MANUF COLOR SELECTOR)	
EFS-1	EXTERIOR FINISH SYSTEM	STO CORPORATION	FINE	MATCH PT-1	
PT-1	PAINT	DEVOE	SEMI-GLOSS	BRAMBLE TAN 2W19-3	
PT-2	PAINT	DEVOE	SEMI-GLOSS	SEPIA 2W19-5	
PT-3	PAINT	DEVOE	SEMI-GLOSS	EGRET 2H14P	
PT-4	PAINT				
RB-1	RUBBER BASE	ARMSTRONG	4" COVE	(SUBMIT MANUF COLOR SELECTOR)	
LT-1	LINOLEUM TILE	ARMSTRONG	12" X 12" LinoArt Granette Tile	(SUBMIT MANUF COLOR SELECTOR)	
SC-1	CONCRETE SEALER	BONDED MATERIALS	CLEAR	GLAZE 'N SEAL	

ROOM FINISH SCHEDULE

		Ceiling		Walls		Floor		Base		Remarks
Room No.	Room Name	Mat.	Fin.	Mat.	Fin.	Mat.	Fin.	Mat.	Fin.	
101	MEN RESTROOM	A	PT-3	A, C, D	CT-3, CT-4, PT-1	C	CT-1	C	CT-5	
102	ELECTRICAL	A	PT-3	D	PT-1	E	SC-1	-	-	
103	WOMEN RESTROOM	A	PT-3	A, C, D	CT-3, CT-4, PT-1	C	CT-1	C	CT-5	
104	MEETING ROOM 1	B	AT-1	D	PT-1	F	LT-1	-	RB-1	
104A	STORAGE	A	PT-3	D	PT-1	F	LT-1	-	RB-1	
105	MEETING ROOM 2	B	AT-1	D	PT-1	F	LT-1	-	RB-1	
106	WOMEN RESTROOM	A	PT-3	A, C, D	CT-3, CT-4, PT-1	C	CT-1	C	CT-5	
107	JANITOR	A	PT-3	A, C, D	CT-3, CT-4, PT-1	C	CT-1	C	CT-5	
108	MEN RESTROOM	A	PT-3	A, C, D	CT-3, CT-4, PT-1	C	CT-1	C	CT-5	
109	WOMEN RESTROOM	A	PT-3	A, C, D	CT-3, CT-4, PT-1	C	CT-1	C	CT-5	
110	MEN RESTROOM	A	PT-3	A, C, D	CT-3, CT-4, PT-1	C	CT-1	C	CT-5	
111	MEETING ROOM 3	B	AT-1	D	PT-1	F	LT-1	-	RB-1	
111A	STORAGE	A	PT-3	D	PT-1	F	LT-1	-	RB-1	
112	KITCHEN	A	PT-3	D	PT-1	E		-	PT-4	
113	MEN RESTROOM	A	PT-3	A, C, D	CT-3, CT-4, PT-1	C	CT-1	C	CT-5	
113A	STORAGE	A	PT-3	D	PT-1	C	CT-1	C	CT-5	
114	SHOWER/CHANGING	A	PT-3	A, C, D	CT-3, CT-4, PT-1	C	CT-1, CT-2	C	CT-5	
115	OFFICE	B	AT-1	D	PT-1	F	LT-1	-	RB-1	
116	STORAGE	A	PT-3	D	PT-1	E	SC-1	-	-	
117	ELECTRICAL	A	PT-3	D	PT-1	E	SC-1	-	-	
118	VESTIBLE	A	PT-3	D	PT-1	E	SC-1	-	-	
119	MECHANICAL	A	PT-3	D	PT-1	E	SC-1	-	-	
120	STORAGE	A	PT-3	D	PT-1	E	SC-1	-	-	
121	OFFICE	B	AT-1	D	PT-1	F	LT-1	-	RB-1	
122	SHOWER/CHANGING	A	PT-3	A, C, D	CT-3, CT-4, PT-1	C	CT-1, CT-2	C	CT-5	
123	WOMEN RESTROOM	A	PT-3	A, C, D	CT-3, CT-4, PT-1	C	CT-1	C	CT-5	
123A	STORAGE	A	PT-3	D	PT-1	C	CT-1	C	CT-5	
124	RECREATION CENTER COURTS	-	PT-3	A, D	PT-1	E, G	SC-1	-	-	
125	LOBBY	A	PT-3	D	PT-1	E	SC-1	-	-	

ROOM MATERIAL CODE LIST		REMARKS
A	GYPSUM BOARD	1
B	ACOUSTICAL TILE	2
C	TILE	3
D	CMU	4
E	CONCRETE	
F	LINOLEUM	
G	WOOD	

BID SET

2145 Wells Street, Suite 301
Wailuku, Hawaii 96793
Telephone: (808) 242-6800
Fax: (808) 986-8301
Email: nai@alohanet.com
www.nishikawaarchitectsmaui.com

Nishikawa Architects, Inc.

© 2017 Nishikawa Architects, Inc.

CLAYTON H. NISHIKAWA LICENSED PROFESSIONAL ARCHITECT No. 6716 HAWAII

THIS WORK WAS PREPARED BY ME OR UNDER MY SUPERVISION. CONSTRUCTION OF THIS PROJECT WILL BE UNDER MY OBSERVATION.

LICENSE EXPIRES 04/30/18

South Maui Community Park
Recreation Center
Liloa Drive, Kihei, Hawaii
TMK: (2) 2-2-02 : 42
Job # P12/012

REVISIONS:

Room Finish Schedule

A-16

SHEET:
PROJECT NO: #Pln
DATE: 11/01/16

ALL DOCUMENTS AND INSTRUMENTS PREPARED BY NISHIKAWA ARCHITECTS, INC. AS INSTRUMENTS OF SERVICE SHALL REMAIN THE PROPERTY OF NISHIKAWA ARCHITECTS, INC. AND IS PROTECTED BY COPYRIGHT LAW AND MAY NOT BE REPRODUCED WITHOUT PERMISSION.

A-16 Room Finish Schedule - Plotted on 1/23/17 at 4:27 PM by Darwin Kiyabu. File Path: BIM Server: bimserver/local - BIM Server 18/1406 SMCPG/SMCP Recreation Center 18

DOOR AND FRAME SCHEDULE

MARK	SIZE			Type	Door	Mode	Glz.	Frame		Framing Details			FIRE RATING	Hardware			NOTES
	W	HT	THK					Constr.	Finish	Head	Jamb	Thres.		SET	Outside	Inside	
D101	7'-0"	9'-2"	0'-1 3/4"	A - Double Swing - Ext.	AG	PR	TG	AL	ALF	1/A-18	2/A-18	6/A-18	NR	10	EXTERIOR	LOBBY	PANIC HARDWARE
D102	7'-0"	9'-2"	0'-1 3/4"	A - Double Swing - Ext.	AG	PR	TG	AL	ALF	1/A-18	2/A-18	6/A-18	NR	10	EXTERIOR	LOBBY	PANIC HARDWARE
D103	3'-0"	6'-8"	0'-1 3/4"	B - Single Swing - Ext.	HMD	SGL	TG	HM	HMF	1/A-18	2/A-18	6/A-18	NR	02	EXTERIOR	WOMEN RR	
D104	3'-0"	6'-8"	0'-1 3/4"	B - Single Swing - Ext.	HMD	SGL	TG	HM	HMF	1/A-18	2/A-18	6/A-18	NR	02	EXTERIOR	MEN RR	
D105	3'-0"	6'-8"	0'-1 3/4"	B - Single Swing - Ext.	HMD	SGL	TG	HM	HMF	1/A-18	2/A-18	6/A-18	NR	01	EXTERIOR	MEETING RM	
D106	3'-0"	6'-8"	0'-1 3/4"	B - Single Swing - Ext.	HMD	SGL	TG	HM	HMF	1/A-18	2/A-18	6/A-18	NR	01	EXTERIOR	KITCHEN	
D107	7'-0"	8'-0"	0'-1 3/4"	C - Double Swing - Ext.	HMD	PR		HM	HMF	1/A-18	2/A-18	6/A-18	NR	09	EXTERIOR	COURT	PANIC HARDWARE
D108	7'-0"	8'-0"	0'-1 3/4"	C - Double Swing - Ext.	HMD	PR		HM	HMF	1/A-18	2/A-18	6/A-18	NR	09	EXTERIOR	COURT	PANIC HARDWARE
D109	7'-0"	8'-0"	0'-1 3/4"	C - Double Swing - Ext.	HMD	PR		HM	HMF	1/A-18	2/A-18	6/A-18	NR	09	EXTERIOR	COURT	PANIC HARDWARE
D110	7'-0"	8'-0"	0'-1 3/4"	C - Double Swing - Ext.	HMD	PR		HM	HMF	1/A-18	2/A-18	6/A-18	NR	09	EXTERIOR	COURT	PANIC HARDWARE
D111	10'-0"	9'-8"	0'-1 3/4"	C - Double Swing - Ext.	HMD	PR		HM	HMF	1/A-18	2/A-18	6/A-18	NR	08	EXTERIOR	VESTIBULE	
D112	7'-0"	8'-0"	0'-1 3/4"	C - Double Swing - Ext.	HMD	PR		HM	HMF	1/A-18	2/A-18	6/A-18	NR	09	EXTERIOR	COURT	PANIC HARDWARE
D113	7'-0"	8'-0"	0'-1 3/4"	C - Double Swing - Ext.	HMD	PR		HM	HMF	1/A-18	2/A-18	6/A-18	NR	09	EXTERIOR	COURT	PANIC HARDWARE
D114	7'-0"	8'-0"	0'-1 3/4"	C - Double Swing - Ext.	HMD	PR		HM	HMF	1/A-18	2/A-18	6/A-18	NR	09	EXTERIOR	COURT	PANIC HARDWARE
D115	7'-0"	8'-0"	0'-1 3/4"	C - Double Swing - Ext.	HMD	PR		HM	HMF	1/A-18	2/A-18	6/A-18	NR	09	EXTERIOR	COURT	PANIC HARDWARE
D116	3'-0"	6'-8"	0'-1 3/4"	B - Single Swing - Ext.	HMD	SGL	TG	HM	HMF	1/A-18	2/A-18	6/A-18	NR	01	EXTERIOR	MEETING RM	
D117	3'-0"	6'-8"	0'-1 3/4"	B - Single Swing - Ext.	HMD	SGL	TG	HM	HMF	1/A-18	2/A-18	6/A-18	NR	01	EXTERIOR	MEETING RM	
D118	3'-0"	7'-0"	0'-1 3/4"	E - Single Swing - Int.	HMD	SGL		HM	HMF	4/A-18	4/A-18	7/A-18	NR	03	COURT	WOMEN RR	
D119	3'-0"	7'-0"	0'-1 3/4"	E - Single Swing - Int.	HMD	SGL		HM	HMF	4/A-18	4/A-18	5/A-18	NR	05	COURT	JANITOR	
D120	3'-0"	7'-0"	0'-1 3/4"	E - Single Swing - Int.	HMD	SGL		HM	HMF	4/A-18	4/A-18	7/A-18	NR	03	COURT	MEN RR	
D121	3'-0"	7'-0"	0'-1 3/4"	E - Single Swing - Int.	WD	SGL		HM	HMF	4/A-18	4/A-18	5/A-18	NR	06	MTG RM	MTG RM STOR.	
D122	3'-0"	7'-0"	0'-1 3/4"	E - Single Swing - Int.	WD	SGL		HM	HMF	4/A-18	4/A-18	7/A-18	NR	07	MTG RM	KITCHEN	
D123	3'-0"	7'-0"	0'-1 3/4"	E - Single Swing - Int.	HMD	SGL		HM	HMF	4/A-18	4/A-18	7/A-18	NR	03	COURT	MEN RR	
D124	3'-0"	7'-0"	0'-1 3/4"	E - Single Swing - Int.	WD	SGL		HM	HMF	4/A-18	4/A-18	7/A-18	NR	06	MEN RR	STORAGE	
D125	3'-0"	7'-0"	0'-1 3/4"	E - Single Swing - Int.	WD	SGL		HM	HMF	4/A-18	4/A-18	7/A-18	NR	04	MEN RR	SHOWER	
D126	10'-0"	9'-8"	0'-1 3/4"	C - Double Swing - Int.	HMD	PR		HM	HMF	1/A-18	2/A-18	6/A-18	NR	08	VESTIBULE	COURT	
D127	3'-0"	7'-0"	0'-1 3/4"	E - Single Swing - Int.	HMD	SGL		HM	HMF	4/A-18	4/A-18	5/A-18	NR	05	VESTIBULE	OFFICE	
D128	8'-0"	9'-0"	0'-1 3/4"	C - Double Swing - Int.	HMD	PR		HM	HMF	4/A-18	4/A-18	5/A-18	NR	11	VESTIBULE	STORAGE	
D129	3'-0"	7'-0"	0'-1 3/4"	E - Single Swing - Int.	WD	SGL		HM	HMF	4/A-18	4/A-18	5/A-18	NR	07	VESTIBULE	ELEC RM	
D130	3'-0"	7'-0"	0'-1 3/4"	E - Single Swing - Int.	WD	SGL		HM	HMF	4/A-18	4/A-18	5/A-18	NR	07	VESTIBULE	MECH RM	
D131	8'-0"	9'-8"	0'-1 3/4"	C - Double Swing - Int.	HMD	PR		HM	HMF	4/A-18	4/A-18	5/A-18	NR	11	VESTIBULE	STORAGE	
D132	3'-0"	7'-0"	0'-1 3/4"	E - Single Swing - Int.	HMD	SGL		HM	HMF	4/A-18	4/A-18	5/A-18	NR	05	VESTIBULE	OFFICE	
D133	3'-0"	7'-0"	0'-1 3/4"	E - Single Swing - Int.	WD	SGL		HM	HMF	4/A-18	4/A-18	7/A-18	NR	04	WOMEN RR	SHOWER	
D134	3'-0"	7'-0"	0'-1 3/4"	E - Single Swing - Int.	WD	SGL		HM	HMF	4/A-18	4/A-18	7/A-18	NR	06	WOMEN RR	STORAGE	
D135	3'-0"	7'-0"	0'-1 3/4"	E - Single Swing - Int.	HMD	SGL		HM	HMF	4/A-18	4/A-18	7/A-18	NR	03	COURT	WOMEN RR	
D136	3'-0"	7'-0"	0'-1 3/4"	E - Single Swing - Int.	HMD	SGL		HM	HMF	4/A-18	4/A-18	7/A-18	NR	03	COURT	MEN RR	
D137	3'-0"	7'-0"	0'-1 3/4"	E - Single Swing - Int.	WD	SGL		HM	HMF	4/A-18	4/A-18	5/A-18	NR	07	COURT	ELEC RM	
D138	3'-0"	7'-0"	0'-1 3/4"	E - Single Swing - Int.	HMD	SGL		HM	HMF	4/A-18	4/A-18	7/A-18	NR	03	COURT	WOMEN RR	
D139	3'-0"	7'-0"	0'-1 3/4"	E - Single Swing - Int.	WD	SGL		HM	HMF	4/A-18	4/A-18	5/A-18	NR	06	MTG RM	MTG RM STOR.	
D140	3'-0"	7'-0"	0'-1 3/4"	E - Single Swing - Int.	WD	SGL		HM	HMF	4/A-18	4/A-18	5/A-18	NR	06	MTG RM	MTG RM STOR.	
D141	7'-8"	6'-0"	0'-1"	F - Roll-Up	MTL	RU		MTL	MTL	8-A/18	2/A-18		NR	12	EXTERIOR	KITCHEN	
D142	8'-8"	6'-8"	0'-1 1/4"	D - Exterior Gate	GATE	PR			STL	1/A-22	2/A-22	3/A-22	NR	13	EXTERIOR	MECH ENCL.	
D143	8'-8"	6'-8"	0'-1 1/4"	D - Exterior Gate	GATE	PR			STL	1/A-22	2/A-22	3/A-22	NR	13	EXTERIOR	MECH ENCL.	
D144	6'-0"	4'-0"	0'-1 1/4"	D - Exterior Gate	GATE	PR			MTL	1/A-22	2/A-22	3/A-22	NR	13	EXTERIOR	EXTERIOR	
D145	8'-8"	6'-8"	0'-1 1/4"	D - Exterior Gate	GATE	PR			STL	1/A-22	2/A-22	3/A-22	NR	13	EXTERIOR	TRASH	
D146	8'-8"	6'-8"	0'-1 1/4"	D - Exterior Gate	GATE	PR			STL	1/A-22	2/A-22	3/A-22	NR	13	EXTERIOR	TRASH	
D147	8'-8"	6'-8"	0'-1 1/4"	D - Exterior Gate	GATE	PR			STL	1/A-22	2/A-22	3/A-22	NR	13	EXTERIOR	TRASH	
D148	8'-8"	6'-8"	0'-1 1/4"	D - Exterior Gate	GATE	PR			STL	1/A-22	2/A-22	3/A-22	NR	13	EXTERIOR	TRASH	
D149	3'-0"	7'-0"	0'-1 1/4"	D - Exterior Gate	GATE	SGL			STL	1/A-22	2/A-22	3/A-22	NR	14	EXTERIOR	TRASH	

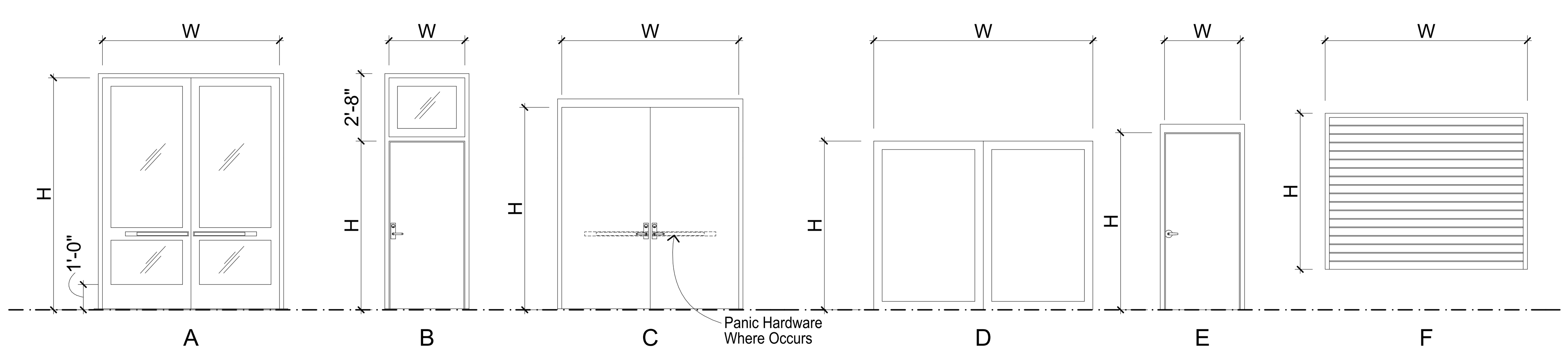

Door Types

SCALE: 1/4" = 1'-0"

DOOR SCHEDULE GENERAL NOTES:

1. DOOR CONSTRUCTION:
   AL = ALUMINUM AND GLASS
   HC = HOLLOW CORE WOOD
   HM = HOLLOW METAL (STEEL)
   MR = METAL (STEEL) ROLL-UP
   SC = SOLID CORE (WOOD)
   SR = STILE AND RAIL (WOOD)
2. FACING AND FINISH:
   AN = ALUMINUM, ANODIZED
   EP = ALUMINUM, ELECTROSTATIC, PAINTED
   MP = METAL, PAINTED
   PL = PLASTIC LAMINATE
   WP = WOOD, PAINTED
   WS = HARDWOOD, STAINED
3. GLASS/LOUVER TYPES:
   AL = ALUMINUM (LOUVER)
   SG = SAFETY GLASS
   SM = SHEET METAL (LOUVER)
   TG = TEMPERED GLASS
   WD = WOOD LOUVER (SPECIES & FINISH TO MATCH DOOR)
4. 3 HR, 1-1/2 HR, 1 HR, ¾ HR, OR 20 MINUTE INDICATED LABELED TIME OF FIRE RATING.
5. ALL DOORS SHALL MEET THE "2006 INTERNATIONAL ENERGY CONSRVATION CODE" REQUIREMENTS, INCLUDING BUT NOT LIMITED TO:
   a. MAX U-FACTOR OF 1.2
   b. MAX SHGC OF 0.40
   c. MAX AIR LEAKAGE OF 0.30 CFM/SF FOR SLIDING DOORS
   d. MAX AIR LEAKAGE OF 0.50 CFM/SF FOR SWING DOORS
6. ADAAG COMPLIANCE
   404.2.7: OPERABLE PARTS OF ALL HARDWARE SHALL BE 34 INCHES MIN. AND 48 INCHES MAX. ABOVE F.F. OR GROUND.

   404.2.7 CONT.: DOOR HARDWARE WITH HARDWARE FUNCTION THAT REQUIRES TO HANDS TO OPERATE SHALL NOT BE USED.

BID SET

2145 Wells Street, Suite 301
Wailuku, Hawaii 96793
Telephone: (808) 242-6900
Fax: (808) 986-8301
Email: nai@adcmaui.com
www.nishikawaarchitectsmaui.com
Nishikawa Architects, Inc.

© 2017 Nishikawa Architects, Inc.

CLAYTON H. NISHIKAWA
LICENSED PROFESSIONAL ARCHITECT
No. 6710
HAWAII, U.S.A.
LICENSE EXPIRES 4/30/2018

THIS WORK WAS PREPARED BY ME OR UNDER MY SUPERVISION. CONSTRUCTION OF THIS PROJECT WILL BE UNDER MY OBSERVATION.

South Maui Community Park
Recreation Center
Liloa Drive, Kihei, Hawaii
TMK: (2) 2-2-02 : 42
Job # P12/012

REVISIONS:

Door Schedule & Types

A-17

SHEET:
PROJECT NO: #Pln
DATE: 11/01/16

ALL DOCUMENTS AND INSTRUMENTS PREPARED BY NISHIKAWA ARCHITECTS, INC. AS INSTRUMENTS OF SERVICE SHALL REMAIN THE PROPERTY OF NISHIKAWA ARCHITECTS, INC. AND IS PROTECTED BY COPYRIGHT LAW AND MAY NOT BE REPRODUCED WITHOUT PERMISSION.

A-17 Door Schedule & Types : Plotted on 1/23/17 at 4:27 PM by Durwin Kiyabu. File Path: BIM Server: bimserver.local - BIM Server 18/1406 SMCPG/SMCP Recreation Center 18

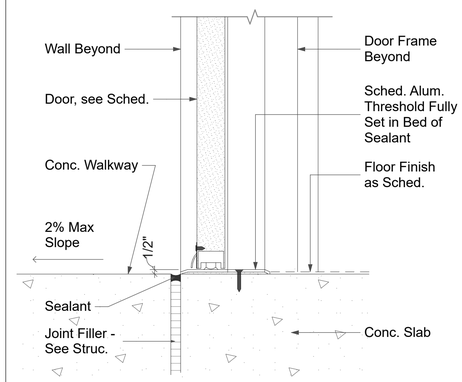

6 Door Threshold Detail
SCALE: 1 1/2"= 1'-0"

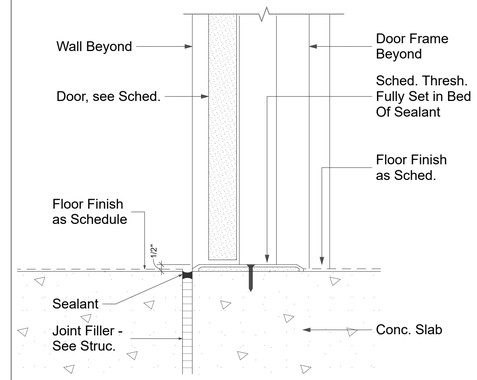

3 Door Threshold Detail
SCALE: 1 1/2"= 1'-0"

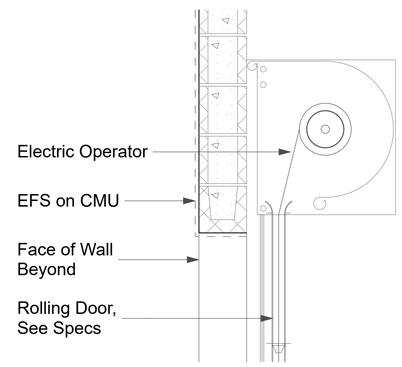

8 Roll Up Door
SCALE: 1" = 1'-0"

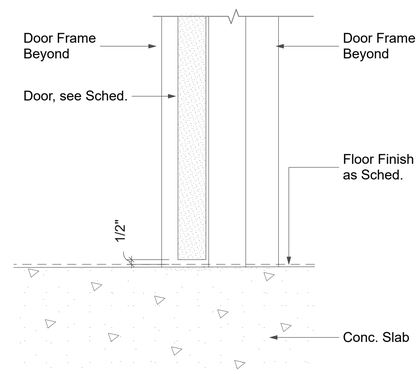

5 Door Threshold Detail
SCALE: 1 1/2"= 1'-0"

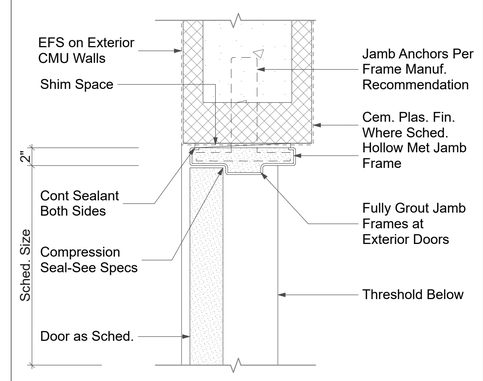

2 Door Jamb Detail
SCALE: 1 1/2"= 1'-0"

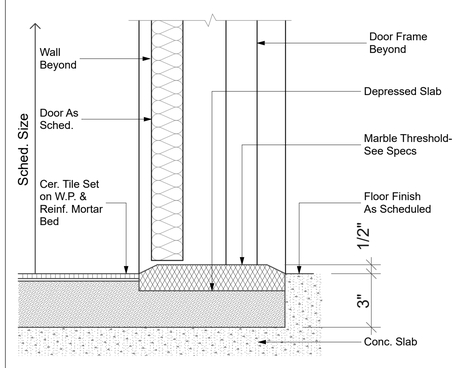

7 Threshold Detail @ Tile
SCALE: 3" = 1'-0"

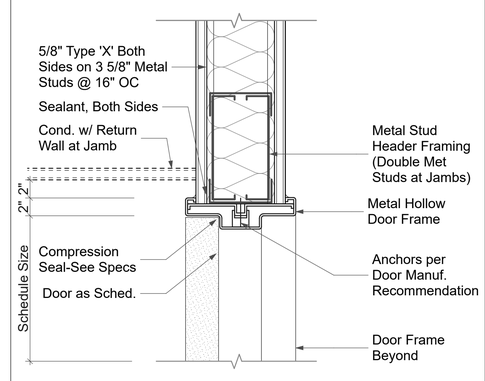

4 Door Head Detail (Jamb Similar)
SCALE: 1 1/2"= 1'-0"

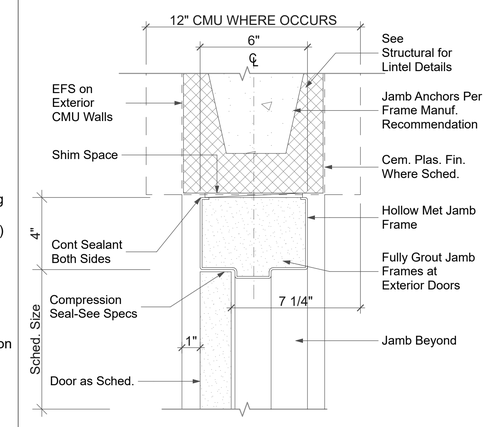

1 Door Head Detail
SCALE: 3" = 1'-0"

BID SET

2145 Wells Street, Suite 301
Wailuku, Hawaii 96793
Telephone: (808) 242-6800
Fax: (808) 986-8301
Email: nai@alohanet.com
www.nishikawaarchitectsmaui.com

Nishikawa Architects, Inc.

CLAYTON H. NISHIKAWA
LICENSED PROFESSIONAL ARCHITECT
No. 6716
HAWAII
Licensed Professional Architect

THIS WORK WAS PREPARED BY ME OR UNDER MY SUPERVISION. CONSTRUCTION OF THIS PROJECT WILL BE UNDER MY OBSERVATION.

South Maui Community Park
Recreation Center

Liloa Drive, Kihei, Hawaii
TMK: (2) 2-2-02 : 42
Job # P12/012

REVISIONS:

Door Details

A-18

SHEET:
PROJECT NO: #Pln
DATE: 11/01/16

© 2017 Nishikawa Architects, Inc.

ALL DOCUMENTS AND INSTRUMENTS PREPARED BY NISHIKAWA ARCHITECTS, INC. AS INSTRUMENTS OF SERVICE SHALL REMAIN THE PROPERTY OF NISHIKAWA ARCHITECTS, INC. AND IS PROTECTED BY COPYRIGHT LAW AND MAY NOT BE REPRODUCED WITHOUT PERMISSION.

Window Schedule														
MARK	Room #	Location	W	H	Sill Height	Type	Frame		Glazing		Framing Details			NOTES
							Material	Finish	Material	Tint Color	Head	Jamb	Sill	
W101	110	Men's Restroo	8'-0"	2'-8"	6'-8"	C	AL	AN	SG, OB		3/A-20	2/A-20	1/A-20	
W102	111	Meeting Room 3	8'-0"	6'-8"	2'-8"	C	AL	AN	SG		3/A-20	2/A-20	1/A-20	
W103	108	Men's Restroom	8'-0"	2'-8"	6'-8"	B	AL	AN	SG, OB		3/A-20	2/A-20	1/A-20	
W104	113	Men's Restroom	5'-4"	2'-8"	6'-8"	A	AL	AN	SG, OB		1/A-20	2/A-20	1/A-20	
W105	113	Men's Restroom	5'-4"	2'-8"	6'-8"	A	AL	AN	SG, OB		3/A-20	2/A-20	1/A-20	
W106	114	Men's Restroom	5'-4"	2'-8"	6'-8"	A	AL	AN	SG, OB		3/A-20	2/A-20	1/A-20	
W107	122	Women's Restroom	5'-4"	2'-8"	6'-8"	A	AL	AN	SG, OB		3/A-20	2/A-20	1/A-20	
W108	123	Women's Restroom	5'-4"	2'-8"	6'-8"	A	AL	AN	SG, OB		3/A-20	2/A-20	1/A-20	
W109	123	Women's Restroom	5'-4"	2'-8"	6'-8"	A	AL	AN	SG, OB		3/A-20	2/A-20	1/A-20	
W110	101	Men's Restroom	5'-4"	2'-8"	6'-8"	A	AL	AN	SG, OB		3/A-20	2/A-20	1/A-20	
W111	104	Meeting Room	8'-0"	2'-8"	6'-8"	C	AL	AN	SG		3/A-20	2/A-20	1/A-20	
W112	104	Meeting Room 1	8'-0"	6'-8"	2'-8"	C	AL	AN	SG		3/A-20	2/A-20	1/A-20	
W113	104	Meeting Room 1	8'-0"	6'-8"	2'-8"	C	AL	AN	SG		3/A-20	2/A-20	1/A-20	
W114	105	Meeting Room 2	8'-0"	6'-8"	2'-8"	C	AL	AN	SG		3/A-20	2/A-20	1/A-20	
W115	115	Office 115	6'-0"	5'-4"	2'-8"	D Sim.	AL	AN	SG	Privacy	3/A-20	2/A-20	1/A-20	Single Hung, Tinted
W116	121	Office 121	6'-0"	5'-4"	2'-8"	D Sim.	AL	AN	SG	Privacy	3/A-20	2/A-20	1/A-20	Single Hung, Tinted
W201		South Face Vent	2'-8"	2'-8"	7'-4"	E	AL	AN			6/A-20		5/A-20	
W202		South Face Vent	2'-8"	2'-8"	7'-4"	E	AL	AN			6/A-20	6/A-20	5/A-20	
W203		South Face Vent	2'-8"	2'-8"	7'-4"	E	AL	AN			6/A-20	6/A-20	5/A-20	
W204		South Face Vent	2'-8"	2'-8"	7'-4"	E	AL	AN			6/A-20	6/A-20	5/A-20	
W208		Gymnassium	6'-4"	5'-4"	14'-0"	D	AL	AN	SG		3/A-20	2/A-20	4/A-20	
W209		Gymnassium	6'-4"	5'-4"	14'-0"	D	AL	AN	SG		3/A-20	2/A-20	4/A-20	
W210		Gymnassium	6'-4"	5'-4"	14'-0"	D	AL	AN	SG		3/A-20	2/A-20	4/A-20	
W211		Gymnassium	6'-4"	5'-4"	14'-0"	D	AL	AN	SG		3/A-20	2/A-20	4/A-20	
W212		Gymnassium	6'-4"	5'-4"	14'-0"	D	AL	AN	SG		3/A-20	2/A-20	4/A-20	
W213		Gymnassium	6'-4"	5'-4"	14'-0"	D	AL	AN	SG		3/A-20	2/A-20	4/A-20	
W214		Gymnassium	6'-4"	5'-4"	14'-0"	D	AL	AN	SG		3/A-20	2/A-20	4/A-20	
W215		Gymnassium	6'-4"	5'-4"	14'-0"	D	AL	AN	SG		3/A-20	2/A-20	4/A-20	
W216		Gymnassium	6'-4"	5'-4"	14'-0"	D	AL	AN	SG		3/A-20	2/A-20	4/A-20	
W217		Gymnassium	6'-4"	5'-4"	14'-0"	D	AL	AN	SG		3/A-20	2/A-20	4/A-20	
W218		Gymnassium	6'-4"	5'-4"	14'-0"	D	AL	AN	SG		3/A-20	2/A-20	4/A-20	
W219		Gymnassium	6'-4"	5'-4"	14'-0"	D	AL	AN	SG		3/A-20	2/A-20	4/A-20	
W220		Gymnassium	6'-4"	5'-4"	14'-0"	D	AL	AN	SG		3/A-20	2/A-20	4/A-20	
W221		Gymnassium	6'-4"	5'-4"	14'-0"	D	AL	AN	SG		3/A-20	2/A-20	4/A-20	
W222		Gymnassium	6'-4"	5'-4"	14'-0"	D	AL	AN	SG		3/A-20	2/A-20	4/A-20	
W223		Gymnassium	6'-4"	5'-4"	14'-0"	D	AL	AN	SG		3/A-20	2/A-20	4/A-20	
W224		Gymnassium	6'-4"	5'-4"	14'-0"	D	AL	AN	SG		3/A-20	2/A-20	4/A-20	
W225		Gymnassium	6'-4"	5'-4"	14'-0"	D	AL	AN	SG		3/A-20	2/A-20	4/A-20	
W226		Gymnassium	6'-4"	5'-4"	14'-0"	CD	AL	AN	SG		3/A-20	2/A-20	4/A-20	
W227		Gymnassium	6'-4"	5'-4"	14'-0"	D	AL	AN	S		3/A-20	2/A-20	4/A-20	
W228		Gymnassium	6'-4"	5'-4"	14'-0"	D	AL	AN	SG		3/A-20	2/A-20	4/A-20	
W229		Gymnassium	6'-4"	5'-4"	14'-0"	D	AL	AN	SG		3/A-20	2/A-20	4/A-20	
W230		Gymnassium	6'-4"	5'-4"	14'-0"	D	AL	AN	SG		3/A-20	2/A-20	4/A-20	
W231		Gymnassium	6'-4"	5'-4"	14'-0"	D	AL	AN	SG		3/A-20	2/A-20	4/A-20	
W231		North Face Vent	2'-8"	2'-8"	12'-4"	E	AL	AN			6/A-20	6/A-20	5/A-20	
W232		North Face Vent	2'-8"	2'-8"	12'-4"	E	AL	AN			6/A-20	6/A-20	5/A-20	
W233		North Face Vent	2'-8"	2'-8"	12'-4"	E	AL	AN			6/A-20	6/A-20	5/A-20	
W234		North Face Vent	2'-8"	2'-8"	12'-4"	E	AL	AN			6/A-20	6/A-20	5/A-20	
W235		Gymnassium	6'-4"	5'-4"	14'-0"	D	AL	AN	SG		3/A-20	2/A-20	4/A-20	
W236		Gymnassium	6'-4"	5'-4"	14'-0"	D	AL	AN	SG		3/A-20	2/A-20	4/A-20	
W237		Gymnassium	6'-4"	5'-4"	14'-0"	D	AL	AN	SG		3/A-20	2/A-20	4/A-20	
W238		Gymnassium	6'-4"	5'-4"	14'-0"	D	AL	AN	SG		3/A-20	2/A-20	4/A-20	
W239		Gymnassium	6'-4"	5'-4"	14'-0"	D	AL	AN	SG		3/A-20	2/A-20	4/A-20	
W240		Gymnassium	6'-4"	5'-4"	14'-0"	D	AL	AN	SG		3/A-20	2/A-20	4/A-20	
W241		Gymnassium	6'-4"	5'-4"	14'-0"	D	AL	AN	SG		3/A-20	2/A-20	4/A-20	
W242		Gymnassium	6'-4"	5'-4"	14'-0"	D	AL	AN	SG		3/A-20	2/A-20	4/A-20	
W243		Gymnassium	6'-4"	5'-4"	14'-0"	D	AL	AN	SG		3/A-20	2/A-20	4/A-20	
W244		Gymnassium	6'-4"	5'-4"	14'-0"	D	AL	AN	SG		3/A-20	2/A-20	4/A-20	
W245		Gymnassium	6'-4"	5'-4"	14'-0"	D	AL	AN	SG		1/A-20	2/A-20	4/A-20	
W246		Gymnassium	6'-4"	5'-4"	14'-0"	D	AL	AN	SG		3/A-20	2/A-20	4/A-20	
W247		Gymnassium	6'-4"	5'-4"	14'-0"	D	AL	AN	SG		3/A-20	2/A-20	4/A-20	
W248		Gymnassium	6'-4"	5'-4"	14'-0"	D	AL	AN	SG		3/A-20	2/A-20	4/A-20	
W249		Gymnassium	6'-4"	5'-4"	14'-0"	D	AL	AN	SG		3/A-20	2/A-20	4/A-20	
W250		Gymnassium	6'-4"	5'-4"	14'-0"	D	AL	AN	SG		3/A-20	2/A-20	4/A-20	
W251		Gymnassium	6'-4"	5'-4"	14'-0"	D	AL	AN	SG		3/A-20	2/A-20	4/A-20	
W252		Gymnassium	6'-4"	5'-4"	14'-0"	D	AL	AN	SG		3/A-20	2/A-20	4/A-20	
W253		Gymnassium	6'-4"	5'-4"	14'-0"	D	AL	AN	SG		3/A-20	2/A-20	4/A-20	
W254		Gymnassium	6'-4"	5'-4"	14'-0"	D	AL	AN	SG		3/A-20	2/A-20	4/A-20	
W255		Gymnassium	6'-4"	5'-4"	14'-0"	D	AL	AN	SG		3/A-20	2/A-20	4/A-20	
W256		Gymnassium	6'-4"	5'-4"	14'-0"	D	AL	AN	SG		3/A-20	2/A-20	4/A-20	
W257		Gymnassium	6'-4"	5'-4"	14'-0"	D	AL	AN	SG		3/A-20	2/A-20	4/A-20	
W258		Gymnassium	6'-4"	5'-4"	14'-0"	D	AL	AN	SG		3/A-20	2/A-20	4/A-20	

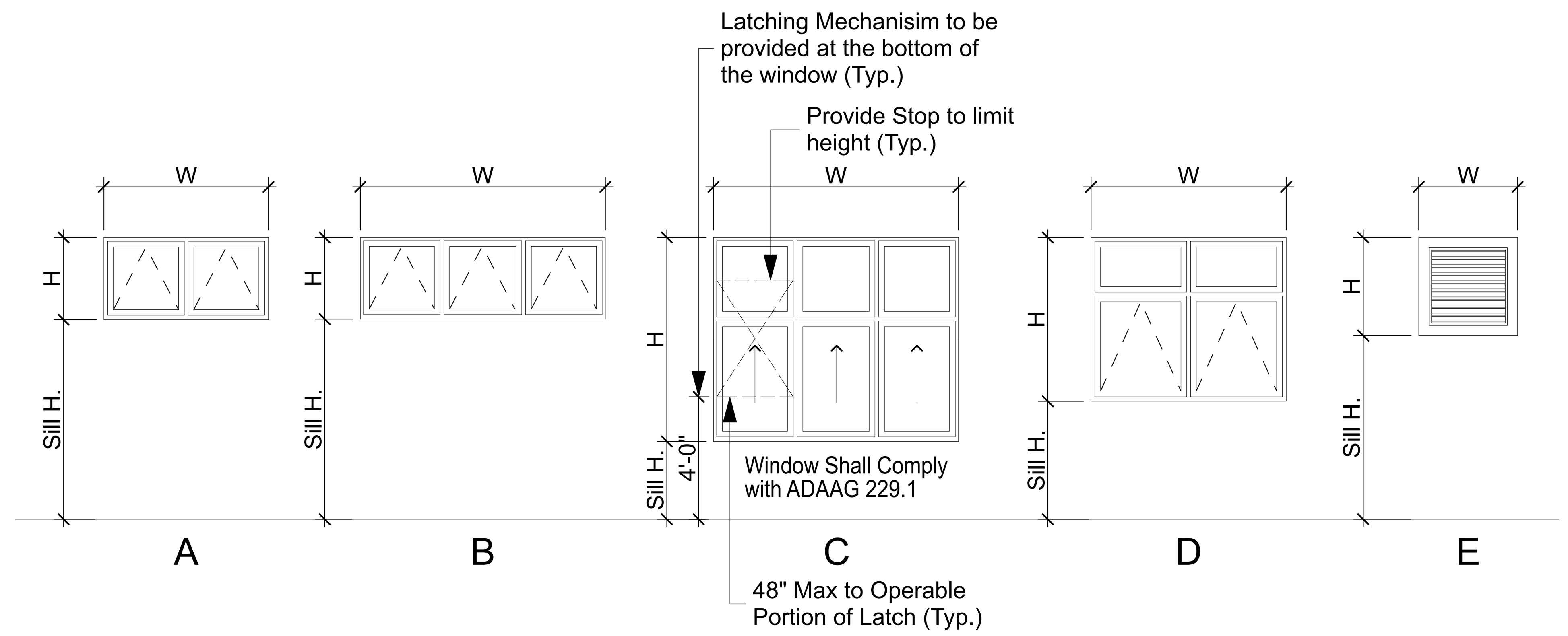

2 Window Types
SCALE: 1/4" = 1'-0"

WINDOW SCHEDULE GENERAL NOTES:

1. "< >" AROUND AN ENTRY DENOTES REMARK RELATING TO THAT ENTRY. REFER TO REMARKS COLUMN OF SCHEDULE & "WINDOW SCHEDULE REMARKS" LIST.
2. CONSTRUCTION:
   AL = ALUMINUM
   VN = VINYL
   WD = WOOD
3. FINISH:
   AN = ALUMINUM, ANODIZED
   MP = METAL, PAINTED
   WS = WOOD, STAINED
4. GLASS TYPES:
   FG = FLOAT GLASS
   MG = MIRROR GLASS
   PG = PROJECTION GLASS
   SG = SAFETY GLASS
   SN = SPANDREL GLASS
   TG = TEMPERED GLASS
   OB = OBSCURE GLASS
   LG = LAMINATED GLASS
5. FIBERGLASS SCREENS IN ALUMINUM FRAMES, MOUNTED ON EXTERIOR SIDE OF OPERABLE SECTIONS, UNLESS OTHERWISE NOTED.
6. SINGLE-PANE GLASS IS 3/16" THICK UNLESS OTHERWISE NOTED.
7. ALL WINDOWS ARE DUAL-GLAZED UNLESS OTHERWISE NOTED.
8. ALL WINDOWS SHALL MEET THE "2006 INTERNATIONAL ENERGY CONSRVATION CODE" REQUIREMENTS, INCLUDING BUT NOT LIMITED TO:
   a. MAX U-FACTOR OF 1.20
   b. MAX SHGC OF 0.40
   c. MAX AIR LEAKAGE OF 0.30 CFM/SF
   d. MAX AIR LEAKAGE OF 1.20 CFM/SF FOR JALOUSIE WINDOWS

BID SET

2145 Wells Street, Suite 301
Wailuku, Hawaii 96793
Telephone: (808) 242-6900
Fax: (808) 986-8301
Email: nai@adcmaui.com
www.nishikawaarchitectsmaui.com
Nishikawa Architects, Inc.

© 2017 Nishikawa Architects, Inc.

CLAYTON H. NISHIKAWA
LICENSED PROFESSIONAL ARCHITECT
No. 6710
HAWAII, U.S.A.
LICENSE EXPIRES 4/30/2018

THIS WORK WAS PREPARED BY ME OR UNDER MY SUPERVISION. CONSTRUCTION OF THIS PROJECT WILL BE UNDER MY OBSERVATION.

South Maui Community Park
Recreation Center
Liloa Drive, Kihei, Hawaii
TMK: (2) 2-2-02 : 42
Job # P12/012

REVISIONS:

Window Schedule & Types

A-19

SHEET:
PROJECT NO: #Pln
DATE: 11/01/16

ALL DOCUMENTS AND INSTRUMENTS PREPARED BY NISHIKAWA ARCHITECTS, INC. AS INSTRUMENTS OF SERVICE SHALL REMAIN THE PROPERTY OF NISHIKAWA ARCHITECTS, INC. AND IS PROTECTED BY COPYRIGHT LAW AND MAY NOT BE REPRODUCED WITHOUT PERMISSION.

A-19 Window Schedule & Types : Plotted on 1/23/17 at 4:27 PM by Durwin Kiyabu. File Path: BIM Server: bimserver.local - BIM Server 18/1406 SMCPG/SMCP Recreation Center 18

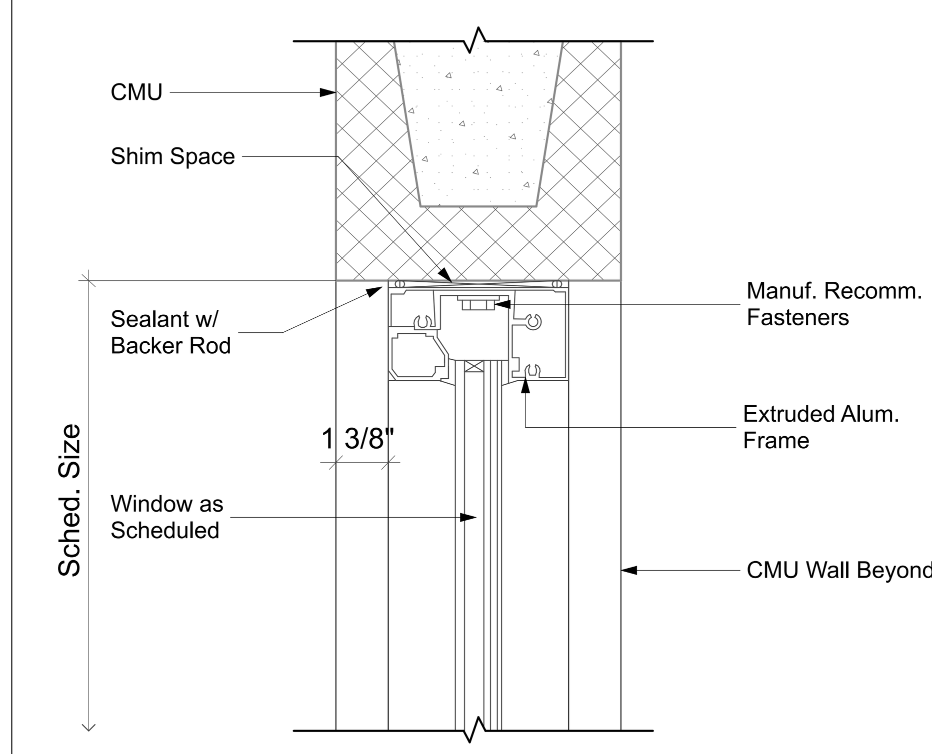

3 Head Detail
SCALE: 3" = 1'-0"

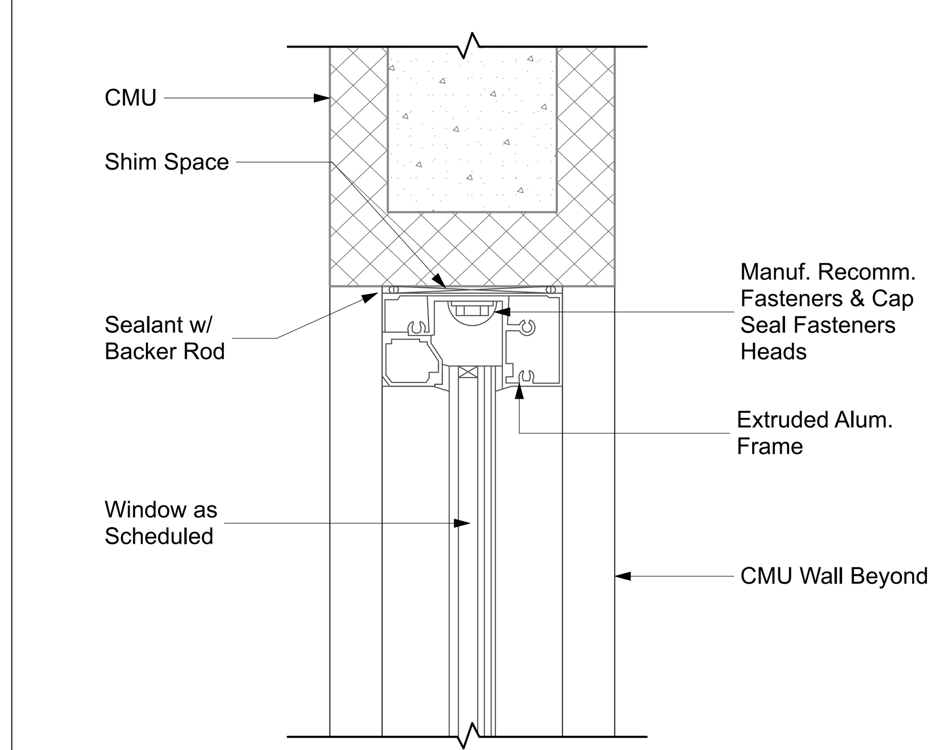

2 Jamb Detail
SCALE: 3" = 1'-0"

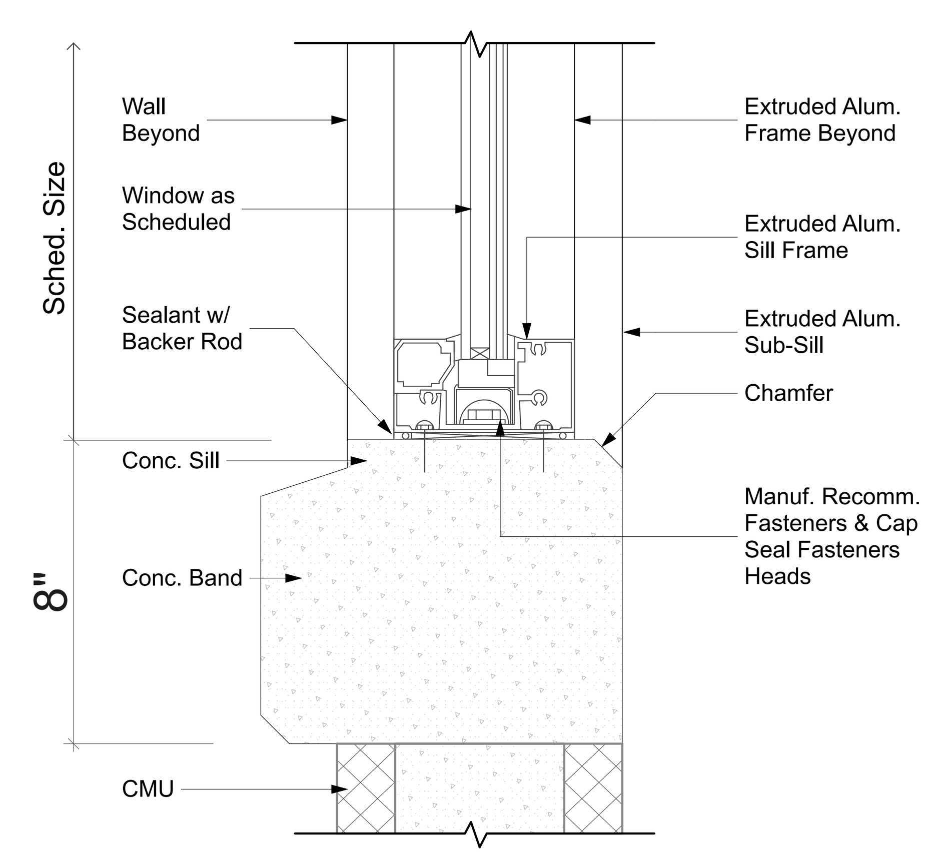

4 Sill / Conc. Band Detail
SCALE: 3" = 1'-0"

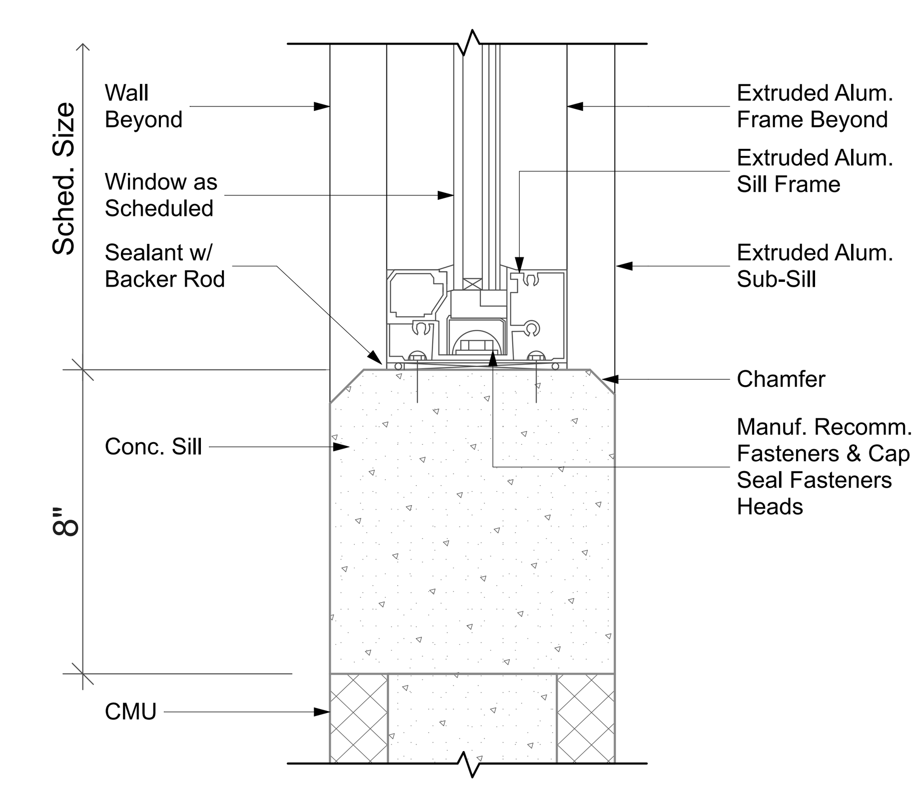

1 Sill Detail
SCALE: 3" = 1'-0"

BID SET

2145 Wells Street, Suite 301
Wailuku, Hawaii 96793
Telephone: (808) 242-6900
Fax: (808) 986-8301
Email: na@adcmaui.com
www.nishikawaarchitectsmaui.com

Nishikawa Architects, Inc.

© 2017 Nishikawa Architects, Inc.

CLAYTON H. NISHIKAWA
LICENSED PROFESSIONAL ARCHITECT
No. 6710

THIS WORK WAS PREPARED BY ME OR UNDER MY SUPERVISION. CONSTRUCTION OF THIS PROJECT WILL BE UNDER MY OBSERVATION.

South Maui Community Park Recreation Center

Liloa Drive, Kihei, Hawaii
TMK: (2) 2-2-02 : 42
Job # P12/012

REVISIONS:

Window Details

A-20

SHEET:
PROJECT NO: #Pln
DATE: 11/01/16

ALL DOCUMENTS AND INSTRUMENTS PREPARED BY NISHIKAWA ARCHITECTS, INC. AS INSTRUMENTS OF SERVICE SHALL REMAIN THE PROPERTY OF NISHIKAWA ARCHITECTS, INC. AND IS PROTECTED BY COPYRIGHT LAW AND MAY NOT BE REPRODUCED WITHOUT PERMISSION.

A-20 Window Details : Plotted on 1/23/17 at 4:27 PM by Darwin Kiyabu. File Path: BIM Server: bimserver.local - BIM Server 18/1406 SMCPG/SMCP Recreation Center 18

Sign Schedule			
Room Number	Room Name	Sign Copy	Notes
101	Men Restroom	Men	
102	Electrical	Electrical	
103	Women Restroom	Women	
104	Meeting Room 1	Meeting A	Provide additional maximum occupancy sign - 35
104A	Storage	Storage	
105	Meeting Room 2	Meeting B	Provide additional maximum occupancy sign - 20
106	Women Restroom	Women	
107	Janitor	Custodial	
108	Men Restroom	Men	
109	Women Restroom	Women	
110	Men Restroom	Men	
111	Meeting Room 3	Meeting C	Provide additional maximum occupancy sign - 20
111A	Meeting Room Storage	Storage	
112	Kitchen	Kitchen	
113	Men Restroom	Men	
113A	Storage	Storage	
114	Shower/Changing	Men Shower	
115	Office	Office A	
116	Storage	Storage	
117	Elec.	Electrical	
118	Vestibule	N/A	
119	Mech.	Mechanical	
120	Storage	Storage	
121	Office	Office B	
122	Shower/Changing	Women Shower	
123	Women Restroom	Women	
123A	Storage	Storage	
124	Recreation Center Courts	N/A	Provide 2 maximum occupancy sign - 3805
N/A	A/C Enclosure	CHILLER ENCLOSURE	Provide 2
N/A	LPG Tank Enclosure	LPG TANK	
N/A	Trash Enclosure	TRASH ENCLOSURE	

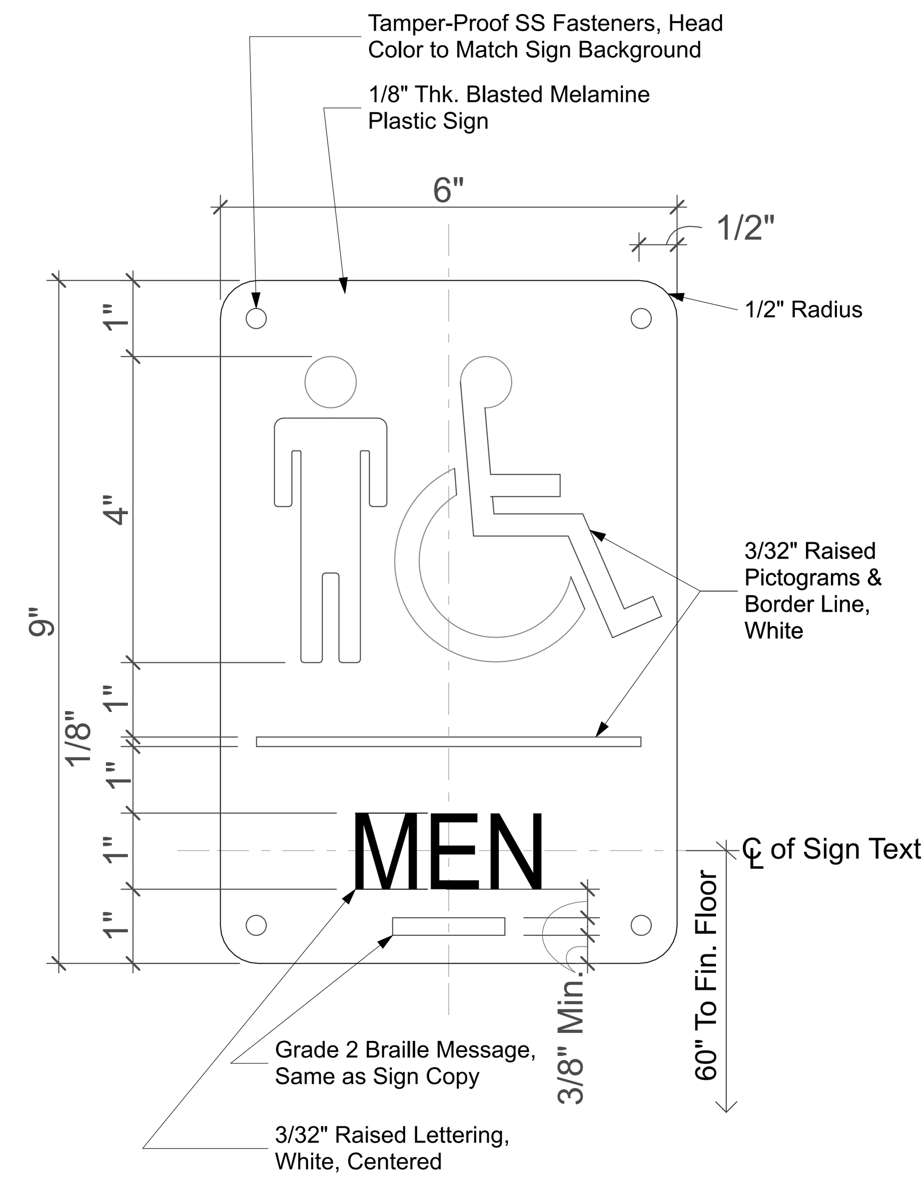

1 Men's Toilet Sign
SCALE: 6" = 1'-0"

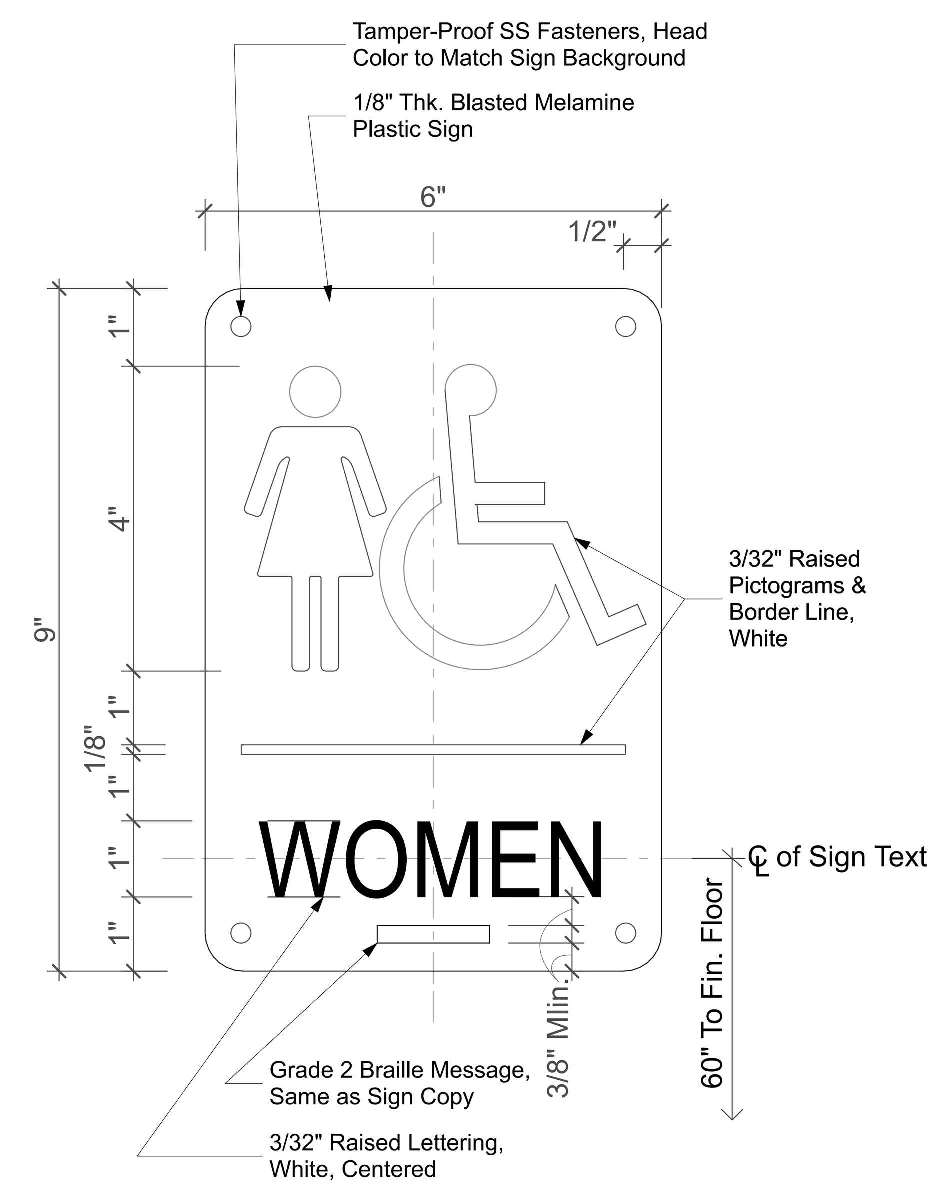

2 Women's Toilet Sign
SCALE: 6" = 1'-0"

Note:

All signs to comply with ADAAG '703 Signs' in reference to:

- -visual/tactile requirements
- -raised character requirements
- -braille requirements
- -installation height and locations
- -visual character requirements
- -pictogram requirements
- -symbols of accessibility.

Font shall be " Helvetica" and compliant to ADAAG 703.2.3 Style.

Provide tactile exit signs at doors where illuminated exits signs occurs.

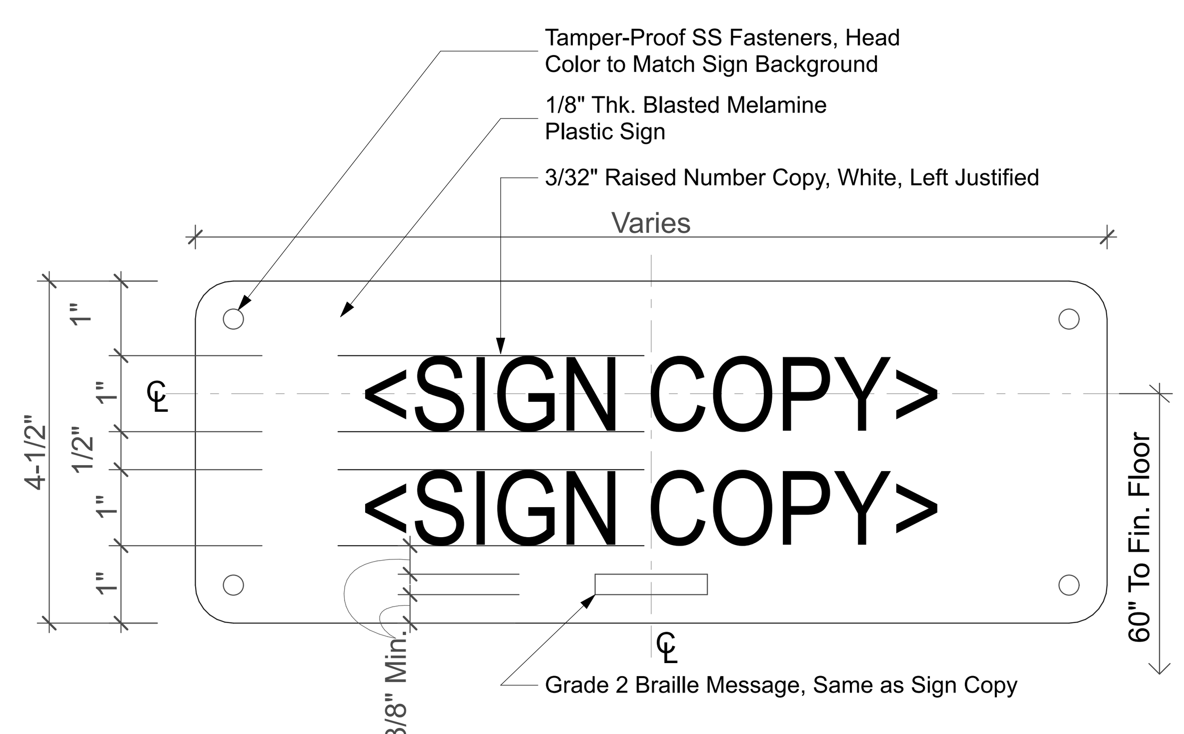

3 Two-Lined Sign
SCALE: 6" = 1'-0"

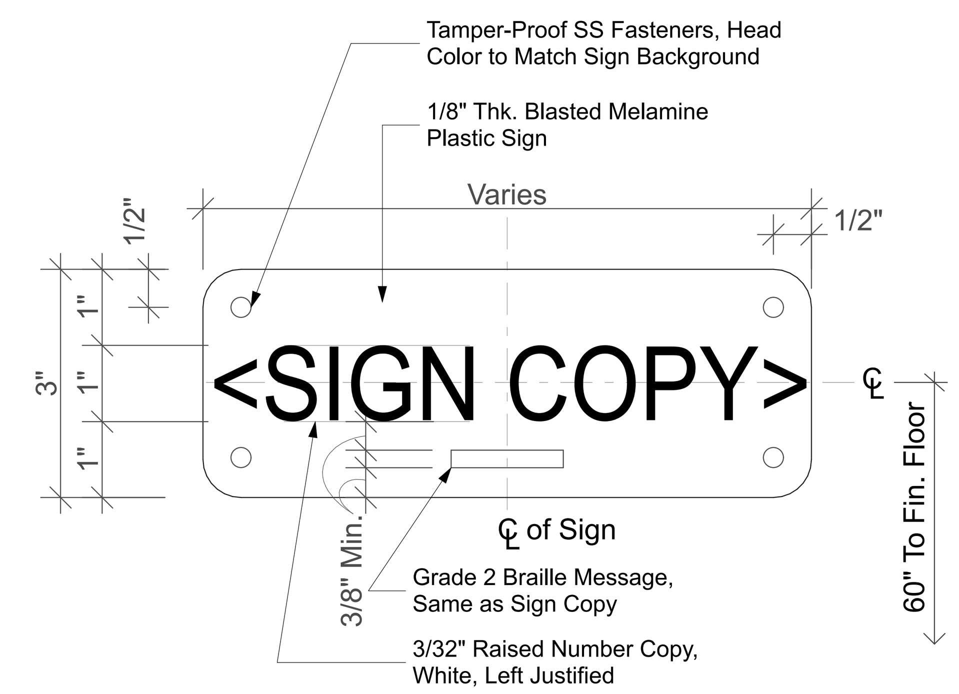

4 One-Lined Sign
SCALE: 6" = 1'-0"

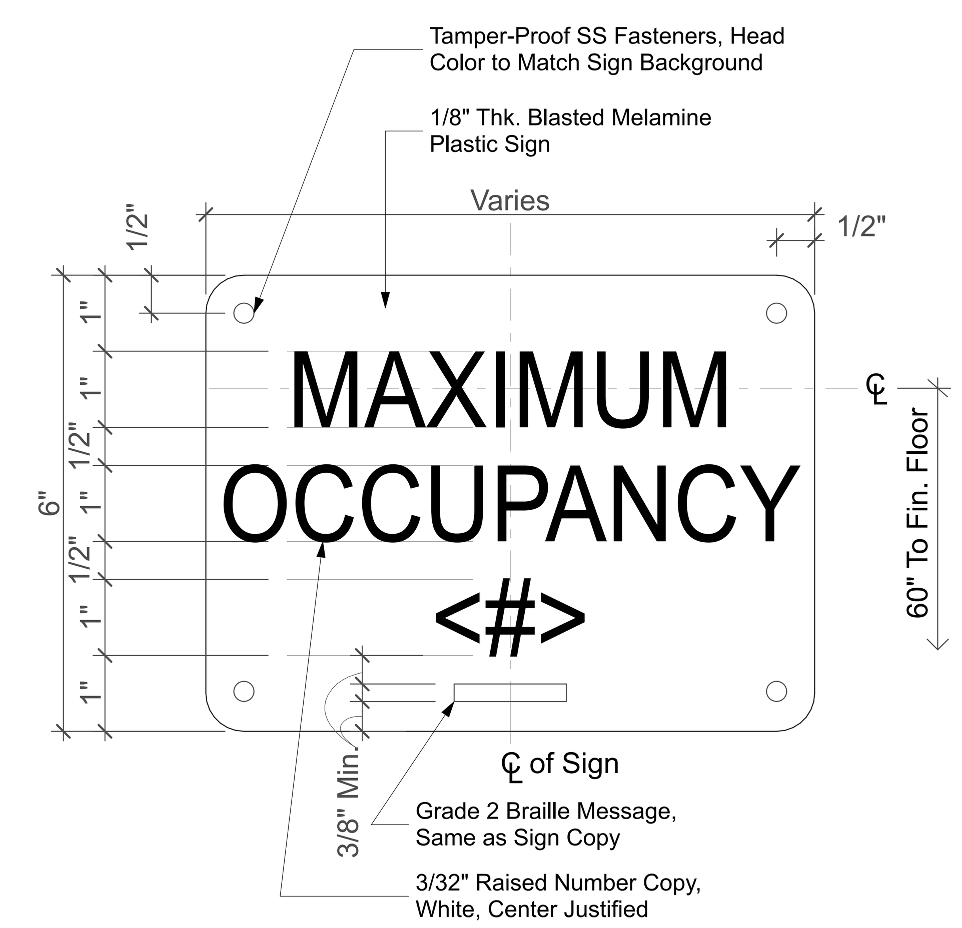

5 Occupant Load Sign
SCALE: 6" = 1'-0"

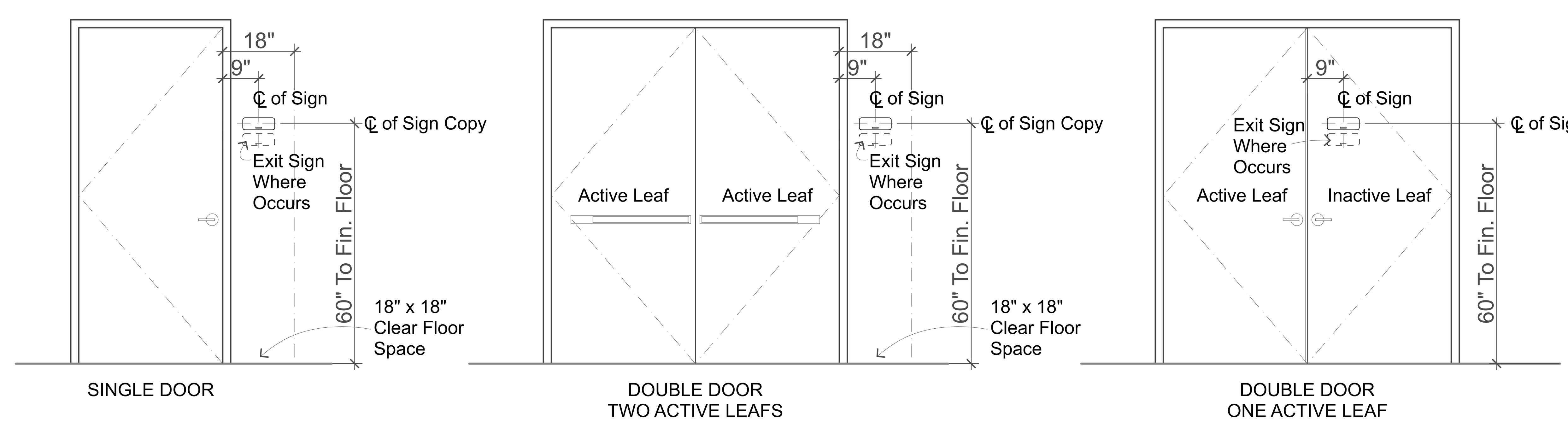

6 Sign Mounting Detail
SCALE: 1/2" = 1'-0"

BID SET

Nishikawa Architects, Inc.
2145 Wells Street, Suite 301
Wailuku, Hawaii 96793
Telephone: (808) 242-6900
Fax: (808) 986-8301
Email: na@nishikawaarchitectsmaui.com
www.nishikawaarchitectsmaui.com

© 2017 Nishikawa Architects, Inc.

THIS WORK WAS PREPARED BY ME OR UNDER MY SUPERVISION. CONSTRUCTION OF THIS PROJECT WILL BE UNDER MY OBSERVATION.

CLAYTON H. NISHIKAWA LICENSED PROFESSIONAL ARCHITECT No. 6710

South Maui Community Park
Recreation Center
Liloa Drive, Kihei, Hawaii
TMK: (2) 2-2-02 : 42
Job # P12/012

REVISIONS:

Sign Schedule

A-21

SHEET:
PROJECT NO: #Pln
DATE: 11/01/16

ALL DOCUMENTS AND INSTRUMENTS PREPARED BY NISHIKAWA ARCHITECTS, INC. AS INSTRUMENTS OF SERVICE SHALL REMAIN THE PROPERTY OF NISHIKAWA ARCHITECTS, INC. AND IS PROTECTED BY COPYRIGHT LAW AND MAY NOT BE REPRODUCED WITHOUT PERMISSION.

A-21 Sign Schedule : Plotted on 1/23/17 at 4:27 PM by Darwin Kiyabu. File Path: BIM Server: bimserver.local - BIM Server 18/1406 SMCP/SMCP Recreation Center 18

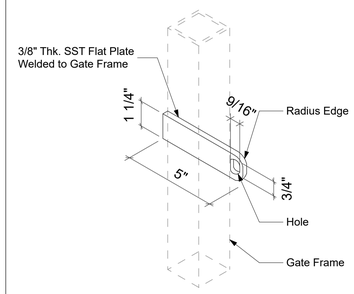

6 Gate Hasp Detail
SCALE: 3" = 1'-0"

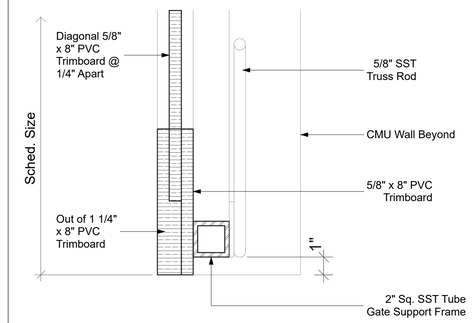

3 Gate Threshold Detail
SCALE: 3" = 1'-0"

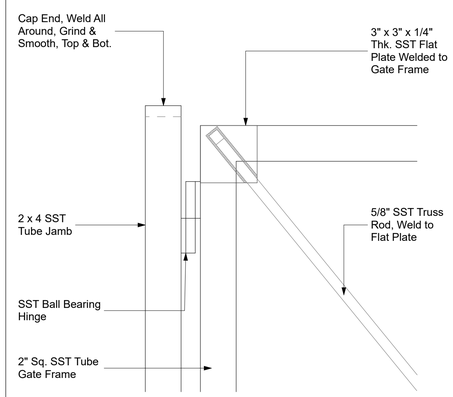

5 Gate Frame Detail
SCALE: 3" = 1'-0"

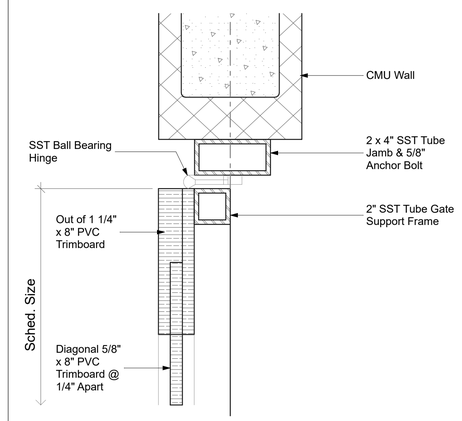

2 Gate Jamb Detail
SCALE: 3" = 1'-0"

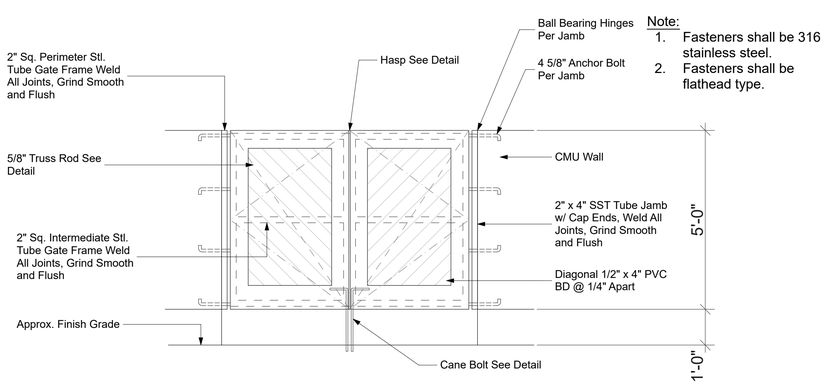

Note:
1. Fasteners shall be 316 stainless steel.
2. Fasteners shall be flathead type.

8 Gate Detailed Elevation
SCALE: 1/2" = 1'-0"

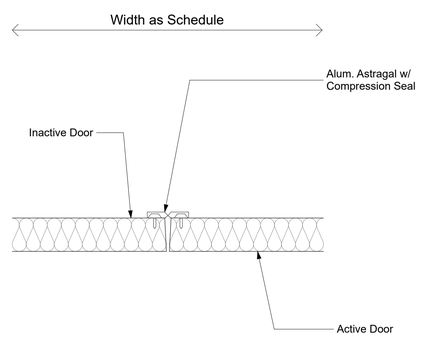

7 Gate Astragal Detail
SCALE: 3" = 1'-0"

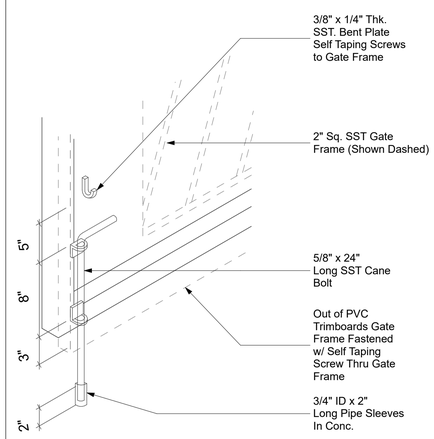

4 Gate Canebolt Detail
SCALE: 3" = 1'-0"

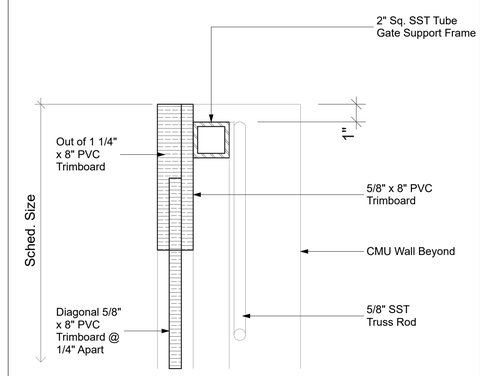

1 Gate Head Detail
SCALE: 3" = 1'-0"

BID SET

2145 Wells Street, Suite 301
Wailuku, Hawaii 96793
Telephone: (808) 242-6800
Fax: (808) 986-8301
Email: nai@alohanui.com
www.nishikawaarchitectsmaui.com

• Nishikawa Architects, Inc.

© 2017 Nishikawa Architects, Inc.

CLAYTON H. NISHIKAWA
LICENSED PROFESSIONAL ARCHITECT
No. 6716
HAWAII, U.S.A.
Expiration Date: 04/30/18

THIS WORK WAS PREPARED BY ME OR UNDER MY SUPERVISION. CONSTRUCTION OF THIS PROJECT WILL BE UNDER MY OBSERVATION.

South Maui Community Park
Recreation Center
Liloa Drive, Kihei, Hawaii
TMK: (2) 2-2-02 : 42
Job # P12/012

REVISIONS:

Gate Details

A-22

SHEET:
PROJECT NO: #Pln
DATE: 11/01/16

ALL DOCUMENTS AND INSTRUMENTS PREPARED BY NISHIKAWA ARCHITECTS, INC. AS INSTRUMENTS OF SERVICE SHALL REMAIN THE PROPERTY OF NISHIKAWA ARCHITECTS, INC. AND IS PROTECTED BY COPYRIGHT LAW AND MAY NOT BE REPRODUCED WITHOUT PERMISSION.

A-22 Gate Details - Plotted on 1/23/17 at 4:27 PM by Darwin Kyabu. File Path: BIM Server bimserver:local - BIM Server 181406 SMCPG\SMCP Recreation Center 18

304 Turning Space

304.3.1 Circular Space. The turning space shall be a space of 60 inches (1525 mm) diameter minimum. The space shall be permitted to include knee and toe clearance complying with 306.

304.3.2 T-Shaped Space. The turning space shall be a T-shaped space within a 60 inch (1525 mm) square minimum with arms and base 36 inches (915 mm) wide minimum. Each arm of the T shall be clear of obstructions 12 inches (305 mm) minimum in each direction and the base shall be clear of obstructions 24 inches (610 mm) minimum. The space shall be permitted to include knee and toe clearance complying with 306 only at the end of either the base or one arm.

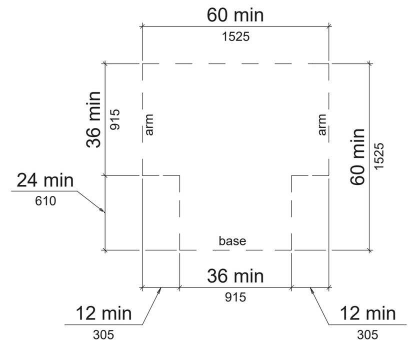

Figure 304.3.2 T-Shaped Turning Space

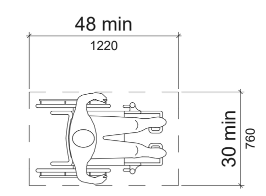

305.3 Size. The clear floor or ground space shall be 30 inches (760 mm) minimum by 48 inches (1220 mm) minimum.

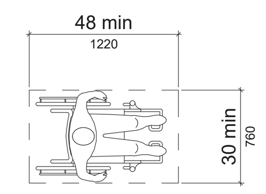

Figure 305.3 Clear Floor or Ground Space

305.5 Position. Unless otherwise specified, clear floor or ground space shall be positioned for either forward or parallel approach to an element.

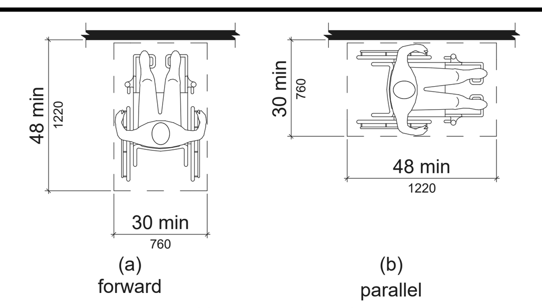

Figure 305.5 Position of Clear Floor or Ground Space

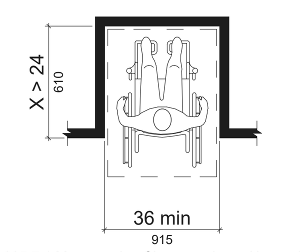

Figure 305.7.1 Maneuvering Clearance in an Alcove, Forward Approach

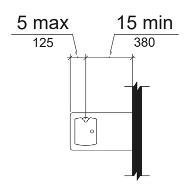

Figure 602.5 Drinking Fountain Spout Location

603 Toilet and Bathing Rooms

603.2 Clearances. Clearances shall comply with 603.2.

603.2.1 Turning Space. Turning space complying with 304 shall be provided within the room.

603.2.2 Overlap. Required clear floor spaces, clearance at fixtures, and turning space shall be permitted to overlap.

603.2.3 Door Swing. Doors shall not swing into the clear floor space or clearance required for any fixture. Doors shall be permitted to swing into the required turning space.

603.3 Mirrors. Mirrors located above lavatories or countertops shall be installed with the bottom edge of the reflecting surface 40 inches (1015 mm) maximum above the finish floor or ground. Mirrors not located above lavatories or countertops shall be installed with the bottom edge of the reflecting surface 35 inches (890 mm) maximum above the finish floor or ground.

603.4 Coat Hooks and Shelves. Coat hooks shall be located within one of the reach ranges specified in 308. Shelves shall be located 40 inches (1015 mm) minimum and 48 inches (1220 mm) maximum above the finish floor.

604 Water Closets and Toilet Compartments

604.2 Location. The water closet shall be positioned with a wall or partition to the rear and to one side. The centerline of the water closet shall be 16 inches (405 mm) minimum to 18 inches (455 mm) maximum from the side wall or partition, except that the water closet shall be 17 inches (430 mm) minimum and 19 inches (485 mm) maximum from the side wall or partition in the ambulatory accessible toilet compartment specified in 604.8.2. Water closets shall be arranged for a left-hand or right-hand approach.

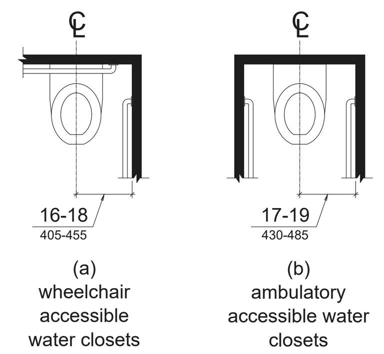

Figure 604.2 Water Closet Location

604.3.1 Size. Clearance around a water closet shall be 60 inches (1525 mm) minimum measured perpendicular from the side wall and 56 inches (1420 mm) minimum measured perpendicular from the rear wall.

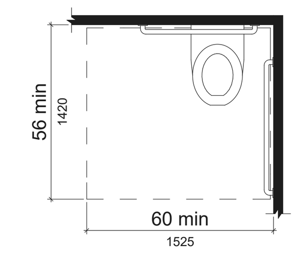

Figure 604.3.1 Size of Clearance at Water Closets

604.3.2 Overlap. The required clearance around the water closet shall be permitted to overlap the water closet, associated grab bars, dispensers, sanitary napkin disposal units, coat hooks, shelves, accessible routes, clear floor space and clearances required at other fixtures, and the turning space. No other fixtures or obstructions shall be located within the required water closet clearance.

604.4 Seats. The seat height of a water closet above the finish floor shall be 17 inches (430 mm) minimum and 19 inches (485 mm) maximum measured to the top of the seat. Seats shall not be sprung to return to a lifted position.

604.5 Grab Bars. Grab bars for water closets shall comply with 609. Grab bars shall be provided on the side wall closest to the water closet and on the rear wall.

604.5.1 Side Wall. The side wall grab bar shall be 42 inches (1065 mm) long minimum, located 12 inches (305 mm) maximum from the rear wall and extending 54 inches (1370 mm) minimum from the rear wall.

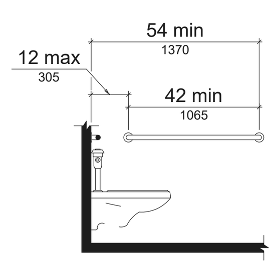

Figure 604.5.1 Side Wall Grab Bar at Water Closets

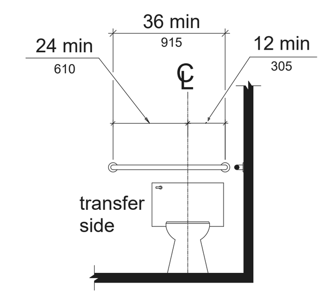

Figure 604.5.2 Rear Wall Grab Bar at Water Closets

604.5.2 Rear Wall. The rear wall grab bar shall be 36 inches (915 mm) long minimum and extend from the centerline of the water closet 12 inches (305 mm) minimum on one side and 24 inches (610 mm) minimum on the other side.

604.6 Flush Controls. Flush controls shall be hand operated or automatic. Hand operated flush controls shall comply with 309. Flush controls shall be located on the open side of the water closet except in ambulatory accessible compartments complying with 604.8.2.

604.7 Dispensers. Toilet paper dispensers shall comply with 309.4 and shall be 7 inches (180 mm) minimum and 9 inches (230 mm) maximum in front of the water closet measured to the centerline of the dispenser. The outlet of the dispenser shall be 15 inches (380 mm) minimum and 48 inches (1220 mm) maximum above the finish floor and shall not be located behind grab bars. Dispensers shall not be of a type that controls delivery or that does not allow continuous paper flow.

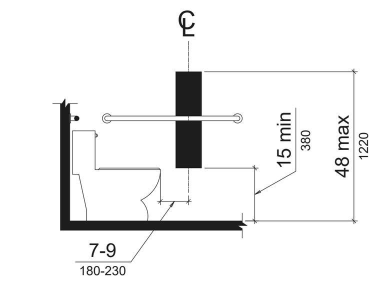

Figure 604.7 Dispenser Outlet Location

604.8 Toilet Compartments. Wheelchair accessible toilet compartments shall meet the requirements of 604.8.1 and 604.8.3. Compartments containing more than one plumbing fixture shall comply with 603. Ambulatory accessible compartments shall comply with 604.8.2 and 604.8.3.

604.8.1 Wheelchair Accessible Compartments. Wheelchair accessible compartments shall comply with 604.8.1.

604.8.1.1 Size. Wheelchair accessible compartments shall be 60 inches (1525 mm) wide minimum measured perpendicular to the side wall, and 56 inches (1420 mm) deep minimum for wall hung water closets and 59 inches (1500 mm) deep minimum for floor mounted water closets measured perpendicular to the rear wall. Wheelchair accessible compartments for children's use shall be 60 inches (1525 mm) wide minimum measured perpendicular to the side wall, and 59 inches (1500 mm) deep minimum for wall hung and floor mounted water closets measured perpendicular to the rear wall.

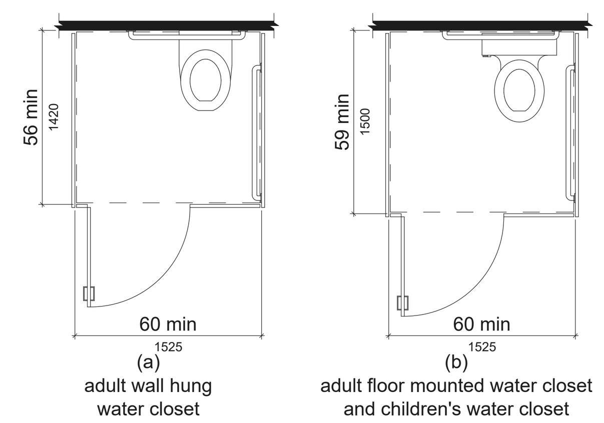

Figure 604.8.1.1 Size of Wheelchair Accessible Toilet Compartment

604.8.1.2 Doors. Toilet compartment doors, including door hardware, shall comply with 404 except that if the approach is to the latch side of the compartment door, clearance between the door side of the compartment and any obstruction shall be 42 inches (1065 mm) minimum. Doors shall be located in the front partition or in the side wall or partition farthest from the water closet. Where located in the front partition, the door opening shall be 4 inches (100 mm) maximum from the side wall or partition farthest from the water closet. Where located in the side wall or partition, the door opening shall be 4 inches (100 mm) maximum from the front partition. The door shall be self-closing. A door pull complying with 404.2.7 shall be placed on both sides of the door near the latch. Toilet compartment doors shall not swing into the minimum required compartment area.

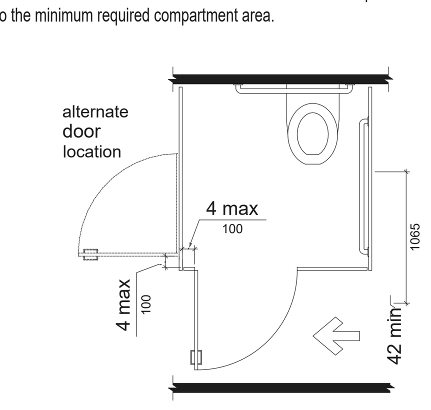

Figure 604.8.1.2 Wheelchair Accessible Toilet Compartment Doors

604.8.1.3 Approach. Compartments shall be arranged for left-hand or right-hand approach to the water closet.

604.8.1.4 Toe Clearance. The front partition and at least one side partition shall provide a toe clearance of 9 inches (230 mm) minimum above the finish floor and 6 inches (150 mm) deep minimum beyond the compartment-side face of the partition, exclusive of partition support members. Compartments for children's use shall provide a toe clearance of 12 inches (305 mm) minimum above the finish floor.

EXCEPTION: Toe clearance at the front partition is not required in a compartment greater than 62 inches (1575 mm) deep with a wall-hung water closet or 65 inches (1650 mm) deep with a floor-mounted water closet. Toe clearance at the side partition is not required in a compartment greater than 66 inches (1675 mm) wide. Toe clearance at the front partition is not required in a compartment for children's use that is greater than 65 inches (1650 mm)deep

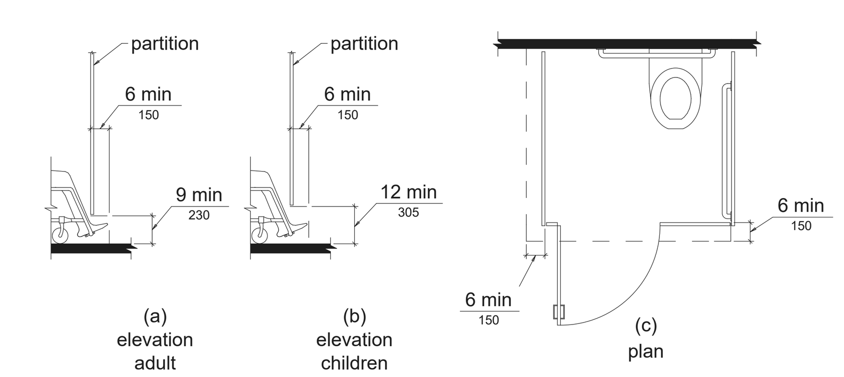

Figure 604.8.1.4 Wheelchair Accessible Toilet Compartment Toe Clearance

604.8.1.5 Grab Bars. Grab bars shall comply with 609. A side-wall grab bar complying with 604.5.1 shall be provided and shall be located on the wall closest to the water closet. In addition, a rear-wall grab bar complying with 604.5.2 shall be provided.

604.8.2 Ambulatory Accessible Compartments. Ambulatory accessible compartments shall comply with 604.8.2.

604.8.2.1 Size. Ambulatory accessible compartments shall have a depth of 60 inches (1525 mm) minimum and a width of 35 inches (890 mm) minimum and 37 inches (940 mm) maximum.

604.8.2.2 Doors. Toilet compartment doors, including door hardware, shall comply with 404, except that if the approach is to the latch side of the compartment door, clearance between the door side of the compartment and any obstruction shall be 42 inches (1065 mm) minimum. The door shall be self-closing. A door pull complying with 404.2.7 shall be placed on both sides of the door near the latch. Toilet compartment doors shall not swing into the minimum required compartment area.

604.8.2.3 Grab Bars. Grab bars shall comply with 609. A side-wall grab bar complying with 604.5.1 shall be provided on both sides of the compartment.

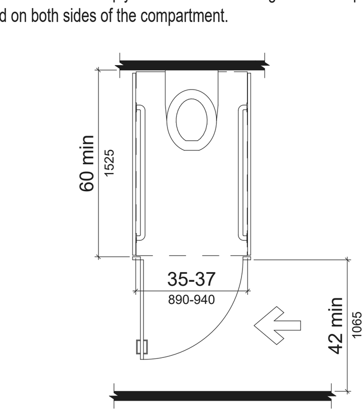

Figure 604.8.2 Ambulatory Accessible Toilet Compartment

605 Urinals

605.2 Height and Depth. Urinals shall be the stall-type or the wall-hung type with the rim 17 inches (430 mm) maximum above the finish floor or ground. Urinals shall be 13 1/2 inches (345 mm) deep minimum measured from the outer face of the urinal rim to the back of the fixture.

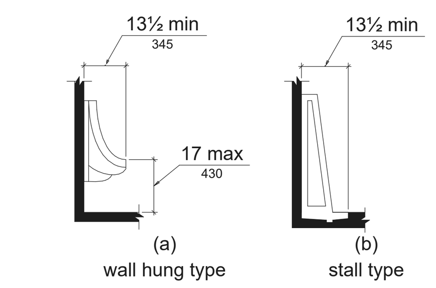

Figure 605.2 Height and Depth of Urinals

605.3 Clear Floor Space. A clear floor or ground space complying with 305 positioned for forward approach shall be provided.

605.4 Flush Controls. Flush controls shall be hand operated or automatic. Hand operated flush controls shall comply with 309.

606 Lavatories and Sinks

606.2 Clear Floor Space. A clear floor space complying with 305, positioned for a forward approach, and knee and toe clearance complying with 306 shall be provided.

606.3 Height. Lavatories and sinks shall be installed with the front of the higher of the rim or counter surface 34 inches (865 mm) maximum above the finish floor or ground.

606.4 Faucets. Controls for faucets shall comply with 309. Hand-operated metering faucets shall remain open for 10 seconds minimum.

606.5 Exposed Pipes and Surfaces. Water supply and drain pipes under lavatories and sinks shall be insulated or otherwise configured to protect against contact. There shall be no sharp

11 ADA Regulations
SCALE: 1:48.95

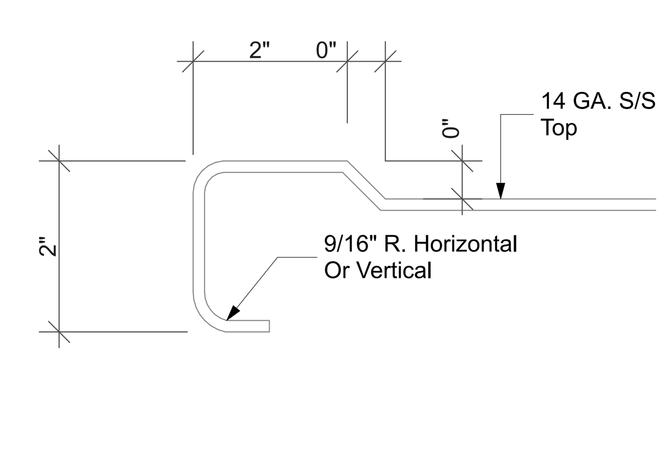

10 Marine Edge detail
SCALE: 6" = 1'-0"

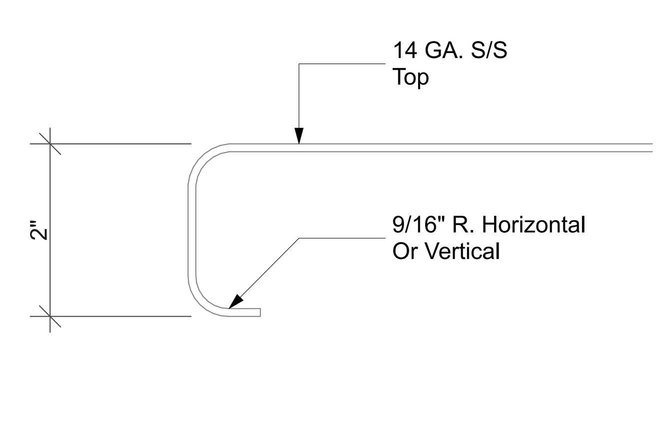

8 Rolled Edge Detail
SCALE: 6" = 1'-0"

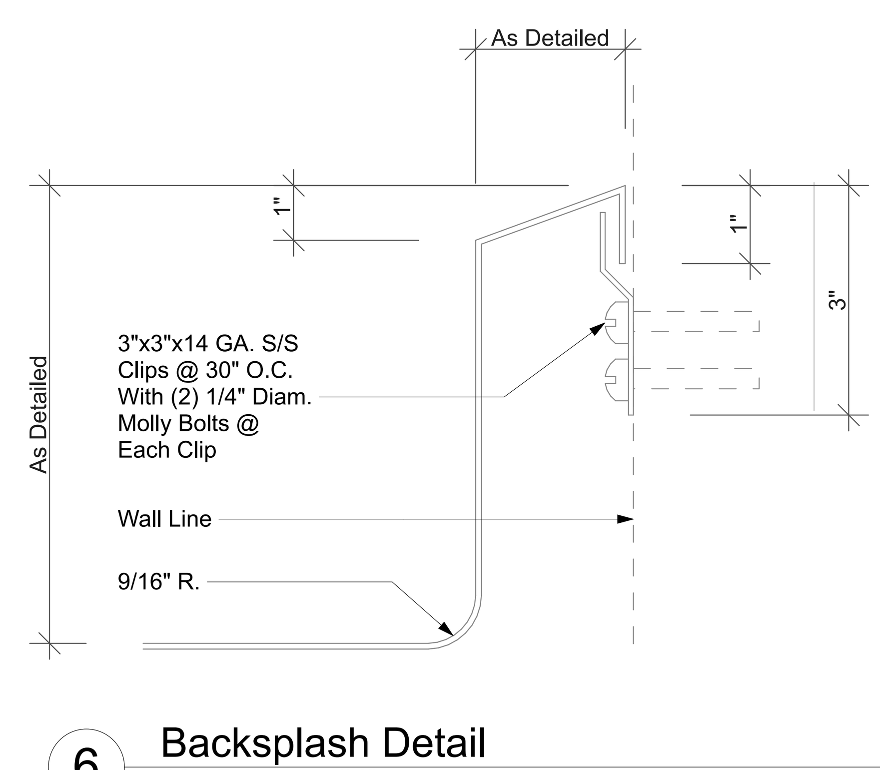

6 Backsplash Detail
SCALE: 6" = 1'-0"

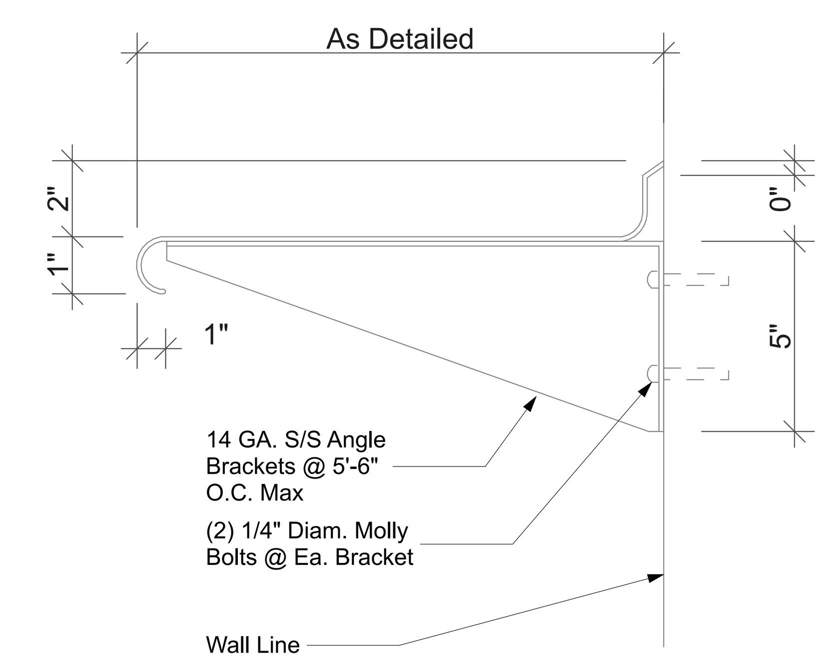

4 Wall Shelf Detail
SCALE: 3" = 1'-0"

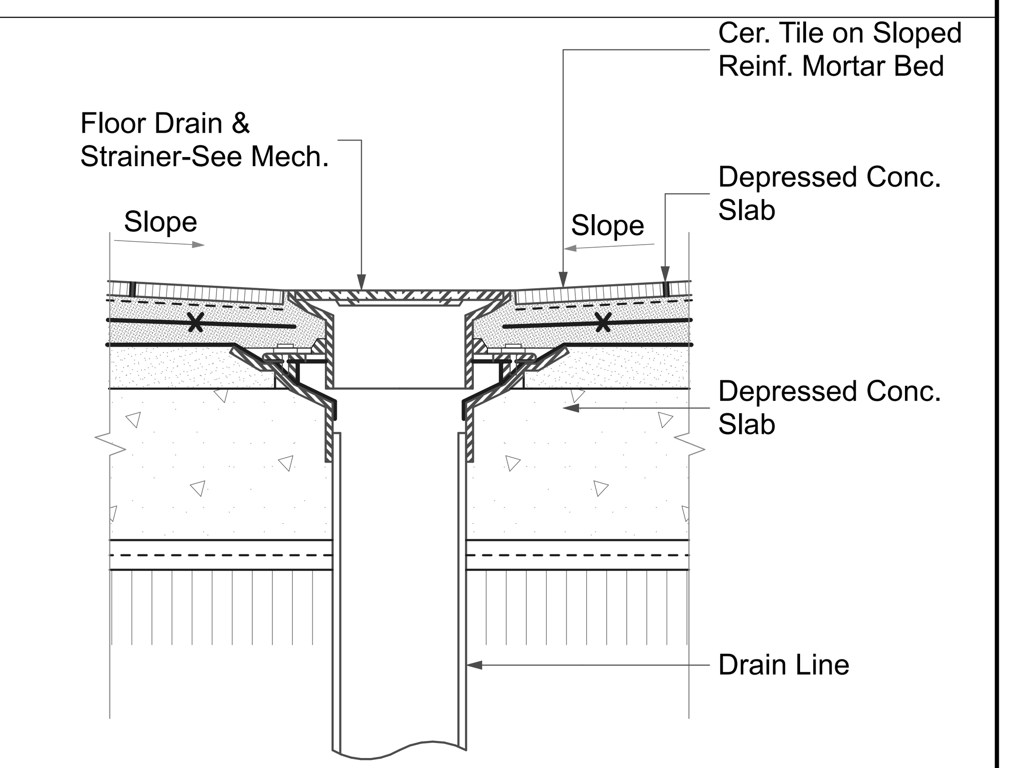

2 Floor Drain Detail
SCALE: 1 1/2"= 1'-0"

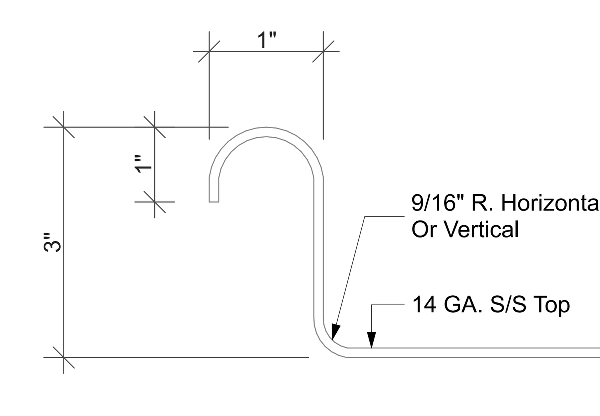

9 Raised Rolled Rim Detail
SCALE: 6" = 1'-0"

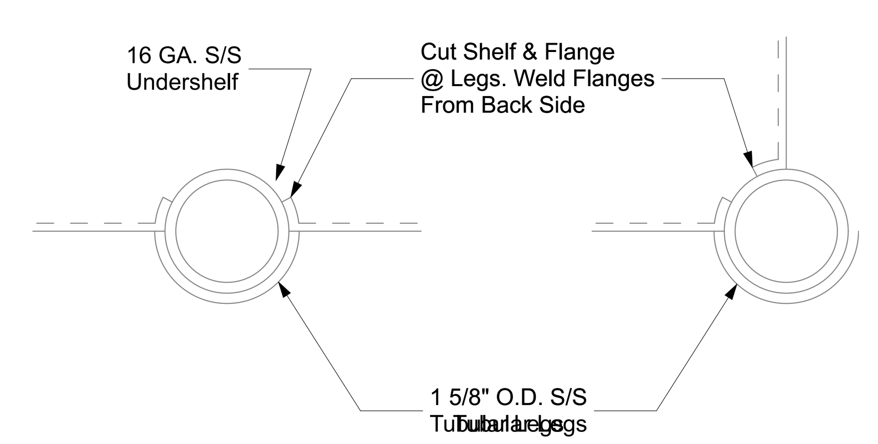

7 Pipe Leg Undershelf Detail
SCALE: 6" = 1'-0"

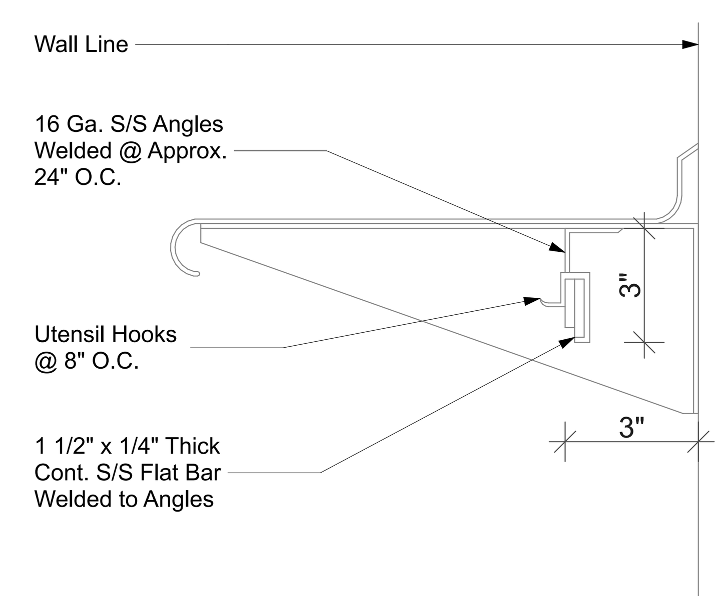

5 Utensil Hook Detail
SCALE: 3" = 1'-0"

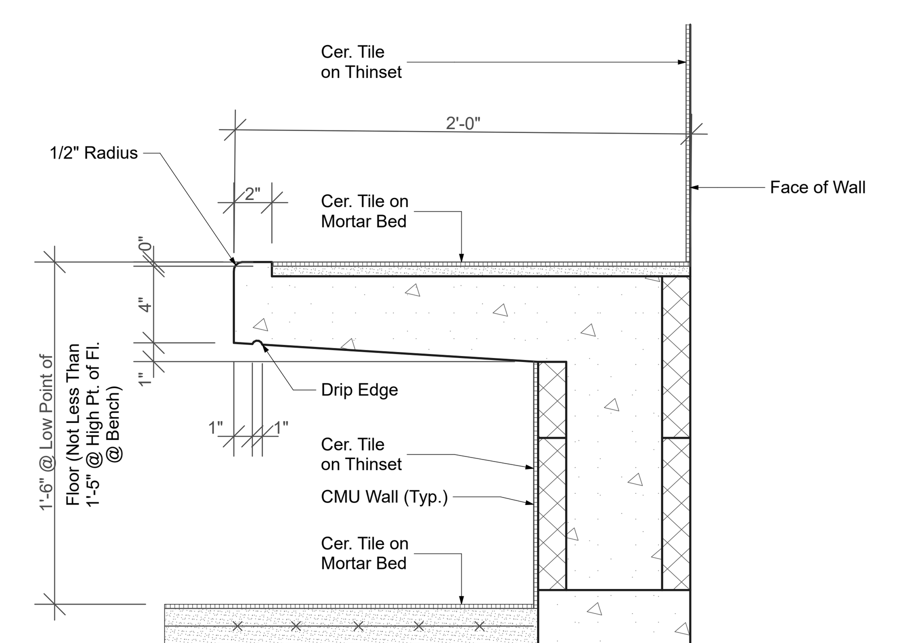

3 Shower Bench
SCALE: 1 1/2"= 1'-0"

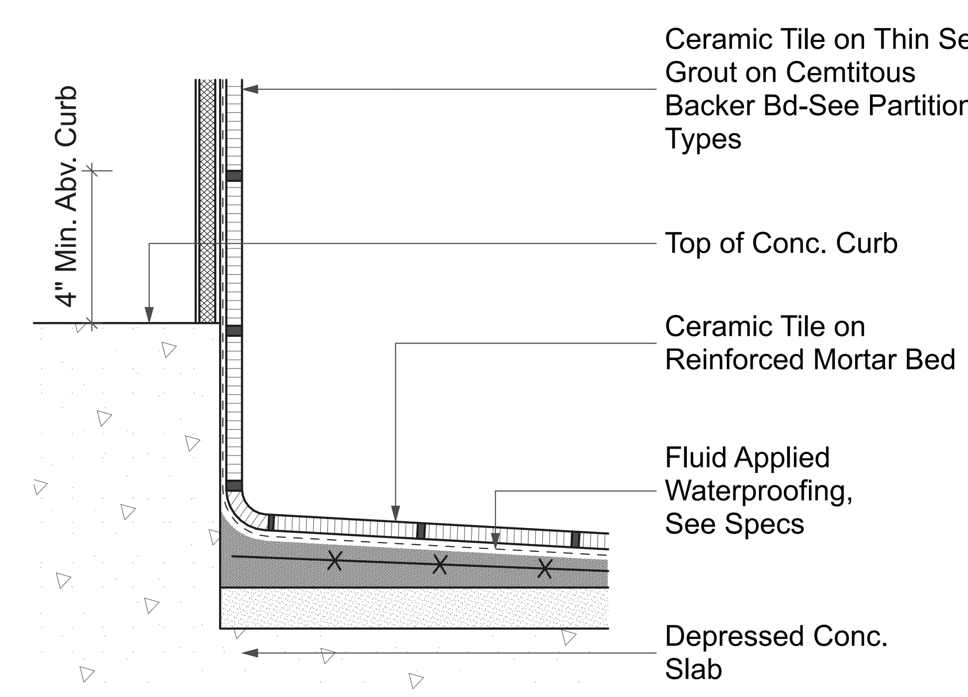

1 Ceramic Tile Detail
SCALE: 1 1/2"= 1'-0"

BID SET

2145 Wells Street, Suite 301
Wailuku, Hawaii 96793
Telephone: (808) 242-6900
Fax: (808) 986-8301
Email: nai@adcmaui.com
www.nishikawaarchitectsmaui.com

Nishikawa Architects, Inc.

© 2017 Nishikawa Architects, Inc.

CLAYTON H. NISHIKAWA
LICENSED PROFESSIONAL ARCHITECT
No. 6710
HAWAII, U.S.A.
LICENSE EXPIRES 4/30/2018

THIS WORK WAS PREPARED BY ME OR UNDER MY SUPERVISION. CONSTRUCTION OF THIS PROJECT WILL BE UNDER MY OBSERVATION.

South Maui Community Park
Recreation Center
Liloa Drive, Kihei, Hawaii
TMK: (2) 2-2-02 : 42
Job # P12/012

REVISIONS:

Misc. Details

A-23

SHEET:
PROJECT NO: #Pln
DATE: 11/01/16

ALL DOCUMENTS AND INSTRUMENTS PREPARED BY NISHIKAWA ARCHITECTS, INC. AS INSTRUMENTS OF SERVICE SHALL REMAIN THE PROPERTY OF NISHIKAWA ARCHITECTS, INC. AND IS PROTECTED BY COPYRIGHT LAW AND MAY NOT BE REPRODUCED WITHOUT PERMISSION.

A-23 Misc. Details : Plotted on 1/23/17 at 4:27 PM by Durwin Kiyabu. File Path: BIM Server: bimserver.local - BIM Server 18/1406 SMCPG/SMCP Recreation Center 18

GENERAL:

A. WORKMANSHIP AND MATERIALS SHALL CONFORM TO THE STATE BUILDING CODE OF HAWAII (IBC, 2006 EDITION AS AMENDED BY THE COUNTY OF MAUI). HOWEVER, WHERE REFERENCE IS MADE TO PERFORMANCE CONFORMING TO OTHER STANDARDS THE MORE STRINGENT SHALL APPLY.

B. THE CONTRACTOR SHALL COMPARE ALL THE CONTRACT DOCUMENTS WITH EACH OTHER AND REPORT IN WRITING TO THE ARCHITECT ALL INCONSISTENCIES AND OMISSIONS.

C. THE CONTRACTOR SHALL TAKE FIELD MEASUREMENTS AND VERIFY FIELD CONDITIONS AND SHALL COMPARE SUCH FIELD MEASUREMENTS AND CONDITIONS WITH THE DRAWINGS BEFORE COMMENCING WORK. REPORT IN WRITING TO THE CONTRACTING OFFICER ALL INCONSISTENCIES AND OMISSIONS.

D. THE CONTRACTOR SHALL BE RESPONSIBLE FOR METHODS OF CONSTRUCTION, WORKMANSHIP AND JOB SAFETY. THE CONTRACTOR SHALL PROVIDE TEMPORARY SHORING AND BRACING AS REQUIRED FOR STABILITY OF STRUCTURAL MEMBERS AND SYSTEMS.

E. CONSTRUCTION LOADING SHALL NOT EXCEED DESIGN LIVE LOAD UNLESS SPECIAL SHORING IS PROVIDED. ALLOWABLE LOADS SHALL BE REDUCED IN AREAS WHERE THE STRUCTURE HAS NOT ATTAINED FULL DESIGN STRENGTH.

F. THE CONTRACTOR SHALL BE RESPONSIBLE FOR PROTECTION OF THE ADJACENT PROPERTIES, STRUCTURES, STREETS AND UTILITIES DURING THE CONSTRUCTION PERIOD.

G. DETAILS NOTED AS TYPICAL ON THE STRUCTURAL DRAWINGS SHALL APPLY IN ALL CONDITIONS UNLESS SPECIFICALLY SHOWN OR NOTED.

H. THE GENERAL CONTRACTOR AND HIS SUBCONTRACTORS MUST SUBMIT IN WRITING ANY REQUESTS FOR MODIFICATIONS TO THE PLANS AND SPECIFICATIONS.

DESIGN CRITERIA:

A. SEISMIC
- A. SEISMIC IMPORTANCE FACTOR: 1.25
- B. MAPPED SPECTRAL RESPONSE ACCELERATIONS:
  - A.SS 0.978
  - B.S1 0.252
- C. SPECTRAL RESPONSE COEFFICENTS:
  - A.SDS 0.652
  - B.SD1 0.168
- D. SEISMIC DESIGN CATEGORY: D
- E. BASIC SEISMIC FORCE RESISTING SYSTEM:
  - A. SPECIAL REINFORCED MASONRY SHEARWALLS
  - B. ORDINARY STEEL MOMENT FRAMES
- F. DESIGN BASE SHEAR (SPECIAL REINFORCED CMU): 39.44 KIPS
- G. SEISMIC RESPONSE COEFFICENT:
  - A. SPECIAL REINFORCED MASONRY SHEARWALLS 0.165
  - B. ORDINARY MOMENT FRAMES 0.169
- H. RESPONSE MODIFICATION FACTOR:
  - A. SPECIAL REINFORCED MASONRY SHEARWALLS 5.0
  - B. ORDINARY STEEL MOMENT FRAMES 3.5
- I. ANALYSIS PROCEDURE USED: EQUIVALENT LATERAL FORCE PROCEDURE

B. WIND
- A. BASIC WIND SPEED – 3 SECOND GUST 115 MPH
- B. WIND IMPORTANCE FACTOR & BUILDING CATEGORY 1.15
- C. WIND EXPOSURE CATEGORY C
- D. INTERNAL PRESSURE COEFFICIENT 0.18
- E. COMPONENTS AND CLADDING PRESSURES PER ASCE 7-05

C. DESIGN LIVE LOADS
- A. ROOF 20 PSF

D. ALLOWABLE FOUNDATION BEARING CAPACITIES
- A. DEAD LOAD + LIVE LOAD 10,000 PSF
- B. DEAD LOAD + LIVE LOAD + LATERAL LOAD 13,333 PSF

FOUNDATION:

A. FOUNDATION DESIGN IS BASED ON GEOTECHNICAL INVESTIGATION BY FEWELL GEOTECHNICAL ENGINEERING, LTD. AND REPORT DATED DECEMBER 30, 2004.

B. CONTRACTOR SHALL PROVIDE FOR DE-WATERING OF EXCAVATION FROM SURFACE WATER, GROUND WATER OR SEEPAGE.

C. CONTRACTOR SHALL PROVIDE FOR DESIGN AND INSTALLATION OF ALL CRIBBING, SHEETING, AND SHORING NECESSARY TO PRESERVE EXCAVATIONS AND EARTH BANKS.

FOUNDATION (CONT):

D. PRIOR TO THE START OF GRADING OPERATIONS, THE SITE SHALL BE CLEARED AND GRUBBED IN ACCORDANCE WITH SECTION 201 OF THE STANDARD SPECIFICATIONS FOR ROAD, BRIDGE, AND PUBLIC WORKS CONSTRUCTION OF THE COUNTY OF MAUI (STANDARD SPECIFICATIONS). ALL ORGANICS, ABOVE-GROUND VEGETATION, RUBBISH AND OTHER DELETERIOUS MATERIALS SHOULD BE REMOVED AND PROPERLY DISPOSED OF OFF-SITE.

E. THE LEVEL, GRADED PAD FOR THE BUILDINGS SHALL EXTEND AT LEAST 5 FEET BEYOND THE EDGE OF THE BUILDINGS AND THEIR ATTACHMENTS.

F. THE EXCAVATIONS INTO THE BASALT SHALL BE TO SUFFICIENT DEPTHS TO ALLOW THE PLACEMENT OF THE RECOMMENDED THICKNESS OF BASE LAYERS FOR THE CONCRETE SLABS-ON-GRADE. HIGH POINTS IN THE ROCK SURFACE SHALL BE EXCAVATED.

G. THE FOUNDATIONS SHALL BE FOUNDED ON INTACT BASALT.

H. FOUNDATIONS ON SLOPES OR WITHIN 5 FEET OF THE TOP OF SLOPES SHALL BE EMBEDDED A SUFFICIENT DEPTH SUCH THAT THERE IS A HORIZONTAL SET-BACK OF AT LEAST 6 FEET FROM THE LOWER OUTSIDE EDGE OF THE FOOTING TO THE COMPACTED SLOPE FACE.

I. THE BOTTOM OF THE FOUNDATION EXCAVATIONS SHALL BE CLEANED OF ANY LOOSE MATERIALS, MOISTURE-CONDITIONED TO WITHIN 3 PERCENT OF THE SOIL'S OPTIMUM MOISTURE CONTENT, AND UNIFORMLY COMPACTED TO AT LEAST 90 PERCENT RELATIVE COMPACTION PRIOR TO THE PLACEMENT OF THE REINFORCING STEEL.

J. LOOSE CLINKER DEPOSITS OR DEFECTS IN THE BASALT SHOULD BE REMOVED TO HARD INTACT BASALT AND THE RESULTING CAVITY BACKFILLED WITH LOW-STRENGTH CONCRETE.

K. THE CONCRETE SLABS-ON-GRADE SHOULD BE UNDERLAIN BY AT LEAST 4 INCHES OF LIGHTLY COMPACTED ASTM D447 NO. 6 AGGREGATE TO PROVIDE A UNIFORM BEARING SURFACE FOR THE SLABS.

L. THE SITE PREPARATION AND GRADING OPERATIONS SHALL BE OBSERVED BY FGE, LTD. TO DETERMINE WHETHER THE ANTICIPATED MATERIALS ARE ENCOUNTERED.

M. THE FOUNDATION EXCAVATIONS SHALL BE OBSERVED BY FGE, LTD. PRIOR TO THE PLACEMENT OF CONCRETE AND REINFORCING STEEL TO DETERMINE WHETHER THE ANTICIPATED BEARING MATERIALS HAVE BEEN ENCOUNTERED.

CONCRETE:

A. CONCRETE CONSTRUCTION SHALL CONFORM TO AMERICAN CONCRETE INSTITUTE ACI 318R-05.

B. CONCRETE SHALL BE REGULAR WEIGHT HARD ROCK CONCRETE AND SHALL HAVE THE FOLLOWING MINIMUM 28 DAY COMPRESSIVE STRENGTHS:
- A. FOOTINGS & TIE BEAMS 3,000 PSI
- B. BEAMS & COLUMNS IN CMU WALLS 4,000 PSI
- C. SLABS ON GRADE 4,000 PSI
- D. ALL OTHER CONCRETE 3,000 PSI

C. CONCRETE DELIVERY TICKETS SHALL RECORD ALL FREE WATER IN THE MIX: AT BATCHING BY PLANT, FOR CONSISTENCY BY DRIVER, AND ANY ADDITIONAL REQUEST BY CONTRACTOR IF PERMITTED BY THE MIX DESIGN.

D. ALL INSERTS, ANCHOR BOLTS, PLATES, AND OTHER ITEMS TO BE CAST IN THE CONCRETE SHALL BE HOT-DIPPED GALVANIZED UNLESS OTHERWISE NOTED.

E. REINFORCING BARS, ANCHOR BOLTS, INSERTS, AND OTHER ITEMS TO BE CAST IN THE CONCRETE SHALL BE SECURED IN POSITION PRIOR TO PLACEMENT OF CONCRETE.

F. CONDUITS, PIPES, AND SLEEVES PASSING THROUGH A SLAB OR FOOTING AND NOT CONFORMING TO TYPICAL DETAILS SHALL BE LOCATED AND SUBMITTED TO THE CONTRACTING OFFICER FOR APPROVAL.

G. CONDUITS, PIPES, AND SLEEVES EMBEDDED WITHIN A SLAB OR WALL (OTHER THAN THOSE MERELY PASSING THROUGH) SHALL BE:
- A. NO LARGER IN OUTSIDE DIMENSIONS THAN ONE THIRD THE OVERALL SLAB OR WALL THICKNESS IN WHICH THEY ARE EMBEDDED.
- B. PLACED IN THE MIDDLE ONE THIRD OF SLAB OR WALL THICKNESS
- C. SPACED NO CLOSER THAN THREE DIAMETERS OR WIDTHS ON CENTER.

H. CONDUITS, PIPES, AND SLEEVES SHALL NOT BE PLACED THROUGH OR EMBEDDED IN A BEAM UNLESS SPECIFICALLY DETAILED.

I. THE CONTRACTOR SHALL LOCATE CONSTRUCTION JOINTS SO AS NOT TO IMPAIR THE STRENGTH OF THE STRUCTURE AND TO MINIMIZE SHRINKAGE STRESSES. SUBMIT LOCATION OF CONSTRUCTION JOINTS TO THE CONTRACTING OFFICER FOR APPROVAL, UNLESS OTHERWISE NOTED.

J. SEE ARCHITECTURAL DRAWINGS FOR CHAMFERS, EDGE RADII, DRIPS, REGLETS, FINISHES AND OTHER NON-STRUCTURAL ITEMS NOT SHOWN OR SPECIFIED ON THE STRUCTURAL DRAWINGS.

CONCRETE (CONT):

K. NON-SHRINK GROUT SHALL BE A PREMIXED NON-METALLIC FORMULA, CAPABLE OF DEVELOPING A MINIMUM COMPRESSIVE STRENGTH OF 3,000 PSI IN 1 DAY AND 5,000 PSI IN 28 DAYS.

L. THE CONTRACTING OFFICER SHALL BE NOTIFIED AT LEAST 3 WORKING DAYS PRIOR TO ANY CONCRETE POUR. NO CONCRETE SHALL BE POURED PRIOR TO OBSERVATION BY THE CONTRACTING OFFICER OR HIS REPRESENTATIVE.

REINFORCING STEEL:

A. REINFORCING STEEL (FOR NORMAL USE, NOT WELDED) SHALL BE DEFORMED BARS CONFORMING TO ASTM A615, GRADE 60.

B. WELDABLE REINFORCING STEEL SHALL BE DEFORMED BARS CONFORMING TO ASTM A706, GRADE 60.

C. CLEAR CONCRETE COVER FOR REINFORCING BARS SHALL BE AS FOLLOWS, UNLESS OTHERWISE NOTED:
- a. FOOTINGS, TIE BEAMS, & ETC. CAST AGAINST EARTH 3"
- b. FOOTINGS, GRADE BEAMS, & ETC. FORMED AND EXPOSED TO EARTH OR WEATHER 2"
- c. WALLS
  - 1. FACES EXPOSED TO EARTH OR WEATHER
    - #5 BARS AND SMALLER 1 1/2"
    - #6 BARS AND LARGER 2"
  - 2. INTERIOR FACES 1"
- d. BEAMS AND COLUMNS PRIMARY REINFORCEMENT, STIRRUPS, TIES AND SPIRALS 1 1/2"

D. CLEAR DISTANCE BETWEEN THE SURFACE OF A BAR AND ANY SURFACE OF A MASONRY UNIT SHALL BE NOT LESS THAN 1/2 INCH, UNLESS OTHERWISE NOTED.

E. REINFORCING STEEL SHALL BE SPLICED WHERE INDICATED ON PLANS. PROVIDE LAP SPLICE LENGTH PER TYPICAL DETAILS AND SCHEDULE, UNLESS OTHERWISE NOTED.

F. BAR LAPS SHALL BE MADE AWAY FROM POINTS OF MAXIMUM STRESS. UNLESS NOTED OTHERWISE, SPLICES, LAPS, DOWEL EXTENSIONS AND EMBEDMENTS SHALL BE 48 BAR DIAMETERS, BUT NOT LESS THAN 24 INCHES. SPLICES SHALL BE STAGGERED WHERE POSSIBLE.

G. UNLESS OTHERWISE NOTED, ALL HORIZONTAL REINFORCING STEEL AT WALL AND WALL FOOTING CORNERS AND INTERSECTIONS SHALL EXTEND TO THE FAR FACE OF THE CORNER AND HOOKED A LENGTH OF 48 BAR DIAMETERS, BUT NOT LESS THAN 24 INCHES, AROUND THE CORNER.

H. BAR BENDS AND HOOKS SHALL BE "STANDARD HOOKS" IN ACCORDANCE WITH ACI 318.

I. WELDING OF REINFORCING STEEL IS NOT PERMITTED UNLESS OTHERWISE SHOWN ON THE DRAWINGS. WELDING OF REINFORCING STEEL SHALL CONFORM TO ANSI/AWS D1.4 STRUCTURAL WELDING CODE. REINFORCING STEEL WHICH IS WELDED SHALL CONFORM TO ASTM A706. REINFORCING STEEL NOT CONFORMING TO ASTM A706 MAY BE USED IF MATERIAL PROPERTIES OF THE REINFORCING STEEL CONFORM TO ANSI/AWS D1.4.

CONCRETE MASONRY UNITS (CMU):

A. REINFORCED MASONRY ASSEMBLIES SHALL HAVE A MINIMUM COMPRESSIVE STRENGTH OF 1500 PSI.

B. CONCRETE MASONRY UNITS SHALL BE TYPE II, NORMAL WEIGHT HOLLOW LOAD-BEARING UNITS CONFORMING TO ASTM C-90 AND HAVE A MINIMUM COMPRESSIVE STRENGTH OF 1,900 PSI.

C. MORTAR SHALL BE TYPE "M" CONFORMING TO ASTM C270 AND HAVE A MINIMUM COMPRESSIVE STRENGTH OF 2,500 PSI AT 28 DAYS.

D. GROUT SHALL CONFORM TO ASTM C476 AND HAVE A MINIMUM COMPRESSIVE STRENGTH OF 2,500 PSI AT 28 DAYS.

E. ALL CELLS AND BOND COURSES WITH REINFORCEMENT AND INSERTS SHALL BE SOLID GROUTED. CLEANOUTS SHALL BE PROVIDED FOR ALL GROUT POURS OVER 5'-4" IN HEIGHT.

F. WHEN GROUTING IS STOPPED FOR ONE HOUR OR LONGER, HORIZONTAL CONSTRUCTION JOINTS SHALL BE FORMED BY STOPPING THE GROUT POUR 1 1/2 INCHES BELOW THE TOP OF THE UPPERMOST UNIT.

G. CONDUITS SHALL BE LOCATED A MINIMUM OF TWO CELLS AWAY FROM WALL ENDS, CORNERS, AND INTERSECTIONS.

H. SEE ARCHITECTURAL DRAWINGS FOR LAYING PATTERN, HEIGHT OF UNITS, SURFACE TEXTURE, AND JOINT TYPE.

STRUCTURAL STEEL:

A. FABRICATION AND ERECTION OF STRUCTURAL STEEL SHALL CONFORM TO THE AMERICAN INSTITUTE OF STEEL CONSTRUCTION MANUAL OF STEEL CONSTRUCTION, THIRTEENTH EDITION.

B. STRUCTURAL STEEL SHALL CONFORM TO ASTM A36 UNLESS OTHERWISE NOTED.

C. STEEL WIDE FLANGE SECTIONS SHALL CONFORM TO ASTM A992.

D. STEEL TUBES SHALL CONFORM TO ASTM A500, GRADE B.

E. HIGH-STRENGTH BOLTS FOR STRUCTURAL STEEL TO STRUCTURAL STEEL CONNNECTIONS SHALL CONFORM TO ASTM A325N TYPE 1, TYPE N. USE LOAD INDICATOR WASHERS.

F. THREADED RODS SHALL CONFORM TO ASTM F1554 GRADE 36 UNLESS OTHERWISE NOTED.

G. ANCHOR RODS FOR STRUCTURAL STEEL TO CONCRETE PEDESTAL OR FOOTING ANCHORAGE SHALL CONFORM TO ASTM F1554 GRADE 36 UNLESS OTHERWISE NOTED.

H. WELDS AND WELDING PROCEDURES SHALL CONFORM TO THE STRUCTURAL WELDING CODE AWS D1.1 OF THE AMERICAN WELDING SOCIETY.

I. WELDING SHALL BE PERFORMED BY WELDERS PREQUALIFIED FOR WELDING PROCEDURES TO BE USED.

J. WELDING ELECTRODES SHALL BE E70XX.

K. ALL STEEL SHALL BE PRIME PAINTED IN THE SHOP.

L. EXPOSED STEEL SHALL BE HOT-DIPPED GALVANIZED.

METAL DECK:

A. METAL DECK AND ACCESSORIES SHALL BE OF THE TYPE AND GAGE CALLED FOR ON THE DRAWINGS.

B. METAL DECK AND ACCESSORIES SHALL BE FORMED FROM STEEL SHEETS CONFORMING TO ASTM 653 SQ GRADE 33, MINIMUM YIELD STRENGTH 33 KSI, WITH G60 GALVANIZED COATING.

C. DECK SHALL BE THREE SPAN CONTINUOUS WHERE POSSIBLE. DO NOT LOCATE SINGLE SPANS AT EDGES OR CORNERS.

D. MINIMUM BEARING OF DECKING ON SUPPORTS SHALL BE 2 INCHES.

E. WELDING OF METAL ROOF DECK
- a. SEE ROOF FRAMING PLAN FOR EXTENT AND ORENTATION OF METAL DECK.
- b. AT EACH SUPPORT, PROVIDE MINIMUM 5-5/8" DIAMETER PUDDLE WELDS
- c. AT EACH SUPPORT PARALLEL TO METAL DECK, PROVIDE MINIMUM 5/8" DIAMETER PUDDLE WELDS AT 12" OC.
- d. ALONG SEAMS AND CONNECT SIDE LAPS BY TOP SEAM WELDING @ 12" ON CENTERS.

F. WELDING OF METAL DECK SHALL BE PERFORMED BY CERTIFIED LIGHT GAGE STEEL WELDERS.

STRUCTURAL COLD-FORMED METAL FRAMING:

A. FABRICATION AND ERECTION OF GAGE METAL STRUCTURES SHALL BE IN ACCORDANCE WITH THE AMERICAN IRON AND STEEL INSTITUTE SPECIFICATIONS, LATEST EDITION.

B. COLD-FORMED STEEL MEMBERS AND ACCESSORIES SHALL BE OF THE TYPE AND GAGE CALLED FOR ON THE DRAWINGS. MEMBER DESIGNATIONS ARE PER STEEL STUD MANUFACTURER'S ASSOCIATION.

C. ALL MEMBERS 16, 14, AND 12 GAGE SHALL MEET THE REQUIREMENTS OF ASTM A 653 SQ GRADE 50. ALL MEMBERS 20 AND 18 GAGE SHALL MEET THE REQUIREMENTS OF ASTM A 653 SQ GRADE 33.

D. PREFABRICATED FRAMING HARDWARE SHALL BE SIMPSON STRONG TIE GALVANIZED, OR APPROVED EQUAL. INSTALL PER MANUFACTURER'S RECOMMENDATIONS.

E. SCREWS SHALL BE SELF-DRILLING, SELF-TAPPING, GAGE METAL SCREWS. MINIMUM EDGE DISTANCE AND CENTER TO CENTER SPACING SHALL BE 3/4 INCH.

F. SCREWS FASTENING GYPBOARD SHEATHING INTO LIGHT GAUGE STEEL SHALL BE MINIMUM #6 SCREWS BY 1", UNLESS OTHERWISE NOTED.

G. PLACE A LAYER OF 30# ROOFING FELT BETWEEN ALL COLD-FORMED METAL MEMBERS AND CONCRETE OR MASONRY SURFACES.

IWAMOTO & ASSOCIATES, LLC
STRUCTURAL ENGINEERS
98-029 HOKAHA STREET, SUITE 37
AIEA, HAWAII 96701
PH: (808) 486-5202
FAX: (808)486-5206
email: mail@iwamotolic.com

SOUTH MAUI COMMUNITY PARK RECREATION CENTER
LILOA DRIVE, KIHEI, HAWAII
TMK: (2)-2-2-24:3

NO.	REVISION	DATE

RON E. IWAMOTO
LICENSED PROFESSIONAL ENGINEER
No. 8871-S
HAWAII, U.S.A.

Expiration date of License: 4/30/18

THIS WORK WAS PREPARED BY ME OR UNDER MY SUPERVISION AND CONSTRUCTION OF THIS PROJECT WILL BE UNDER MY OBSERVATION

GENERAL NOTES

PROJECT NO.	1314
CHECKED BY:	RI
DRAWN BY:	IB
DATE:	11/01/16
SCALE:	AS SHOWN
SHT NO.: ___OF___	S-1.0

PRE–ENGINEERED METAL BUILDINGS:

A. DESIGN OF THE PRE–ENGINEERED BUILDING SHALL CONFORM TO THE 2006 INTERNATIONAL BUILDING CODE AS ADOPTED AND/OR AMENDED BY THE COUNTY OF MAUI OR THE METAL BUILDING MANUFACTURER'S ASSOCIATION (MBMA) "DESIGN PRACTICES MANUAL", WHICHEVER IS MORE RESTRICTIVE.

B. THE BUILDING SHALL BE DESIGNED BY BUTLER MANUFACTURING OR AN APPROVED EQUAL AS A COMPLETE SYSTEM. ALL COMPONENTS OF THE SYSTEM SHALL BE SUPPLIED OR SPECIFIED BY THE SAME MANUFACTURER.

C. SHOP DRAWINGS AND CALCULATIONS SHALL BE SUBMITTED TO THE ARCHITECT FOR APPROVAL A MINIMUM OF FOUR (4) WEEKS PRIOR TO FABRICATION. THESE DRAWINGS AND CALCULATIONS SHALL BE STAMPED AND SIGNED BY A STRUCTURAL ENGINEER REGISTERED TO PRACTICE IN THE STATE OF HAWAII.

A. COLD–FORMED STEEL PURLINS AND ACCESSORIES SHALL BE DESIGNED AND PROVIDED BY THE PRE–ENGINEERED METAL BUILDING MANUFACTURER.

B. PURLINS SHALL SPAN OVER TWO OR MORE SUPPORTS.

C. COLD–FORMED STEEL PURLINS SHALL MEET THE REQUIREMENTS OF ASTM A 570. MINIMUM YIELD STRENGTH OF STEEL SHALL BE 55,000 PSI.

D. COLD FORMED STEEL PURLINS SHALL HAVE THE FOLLOWING MINIMUM SECTION PROPERTIES:
A. Z–PURLIN
A. IXX = 41.97 IN 4
B. SXX = 7.00 IN 3
B. EAVE STRUT:
A. IXX = 20.09 IN 4
B. SXX = 3.35 IN 3

D. DESIGN DEAD LOADS: THE DEAD LOAD SHALL INCLUDE THE WEIGHT OF THE METAL BUILDING SYSTEM AS DETERMINED BY THE SYSTEM MANUFACTURER, CEILING FRAMING, MECHANICAL, ELECTRICAL, AND PLUMBING LOADS.

E. DESIGN LOADS
A. ROOF LIVE LOADS ———— 20 PSF
B. ROOF COLLATERAL LOADS ———— 13 PSF
C. ROOF COLLATERAL POINT LOADS
A. BASKETBALL BACKSTOP SUPPORTS ———— 500 LBS
D. ROOF COLLATERAL LOADS
A. ROLL–UP DIVIDER CURTAIN ———— 20 PLF
B. MECHANICAL DUCTWORK ———— 5 PLF

F. BASIC DESIGN LOADS:
A. WIND LOADS PER ASCE 7–05
B. SEISMIC LOADS PER ASCE 7–05

G. DEFLECTIONS SHALL BE LIMITED AS FOLLOWS:
PRIMARY FRAMING:
A. PER ASCE 7–05 FOR SEISMIC FORCES
B. H/500 FOR 10–YEAR WIND LOADS
C. L/360 FOR ROOF DEAD LOAD + ROOF LIVE LOAD; BUT NOT LESS THAN THAT REQUIRED TO MAINTAIN POSITIVE DRAINAGE FOR THE GREATER OF DEAD LOAD +1/2 ROOF DEAD LOAD +5 PSF
D. L/360 FOR 10–YEAR WIND LOAD ON WALLS AND ROOF

H. THERMAL EFFECTS: STANDING SEAM ROOF PANELS SHALL BE FREE TO MOVE IN RESPONSE TO THE EXPANSION AND CONTRACTION FORCES RESULTING FROM A TEMPERATURE VARIATION. ASSEMBLY TO PERMIT MOVEMENT OF COMPONENTS WITHOUT BUCKLING, FAILURE OF JOINT SEALS, UNDUE STRESS ON FASTENERS OR OTHER DETRIMENTAL EFFECTS, WHEN SUBJECT TO TEMPERATURE RANGE OF 30 DEGREES F.

SPECIAL INSPECTION:

A. CONTRACTOR SHALL BE RESPONSIBLE FOR ENSURING THAT SPECIAL INSPECTION OF PORTIONS OF THE WORK, AS REQUIRED BY THE BUILDING CODE OF THE COUNTY OF MAUI, IS MADE AT THE APPROPRIATE TIME. THE CONTRACTOR SHALL GIVE TIMELY NOTICE OF WHEN AND WHERE INSPECTIONS ARE TO BE MADE AND PROVIDE ACCESS FOR THE INSPECTOR. THE CONTRACTOR SHALL CORRECT DEFECTIVE WORK AT NO ADDITIONAL COST TO THE OWNER AND PAY FOR RE–INSPECTION.

B. THE FOLLOWING STRUCTURAL WORK REQUIRES SPECIAL INSPECTION:
A. STEEL CONSTRUCTION
B. WELDING
C. HIGH STRENGTH BOLTING
D. CONCRETE CONSTRUCTION
E. MASONRY CONSTRUCTION

C. PERIODIC INSPECTION OF THE REINFORCING OF ALL CONCRETE FOOTINGS SHALL BE REQUIRED.

D. THE SPECIAL INSPECTOR SHALL FURNISH INSPECTION REPORTS TO THE OWNER, LICENSED ENGINEER OR ARCHITECT OF RECORD, AND OTHER OWNER–DESIGNATED PERSONS. REPORTS SHALL INDICATE THAT WORK INSPECTED WAS DONE IN CONFORMANCE TO APPROVED CONSTRUCTION DOCUMENTS. THE SPECIAL INSPECTOR SHALL SUBMIT A FINAL SIGNED REPORT TO THE OWNER AND LICENSED ENGINEER OR ARCHITECT OF RECORD, STATING WHETHER THE WORK REQUIRING SPECIAL INSPECTION WAS, TO THE BEST OF THE INSPECTOR'S KNOWLEDGE, IN CONFORMANCE TO THE APPROVED PLANS AND SPECIFICATIONS AND THE APPLICABLE WORKMANSHIP PROVISIONS OF THIS CODE. PRIOR TO THE FINAL INSPECTION REQUIRED UNDER THE BUILDING CODE SECTION 109.3.10 THE LICENSED ENGINEER OR ARCHITECT OF RECORD SHALL SUBMIT A WRITTEN STATEMENT VERIFYING RECEIPT OF THE FINAL INSPECTION REPORTS AND DOCUMENTING THAT THERE ARE NO UNRESOLVED CODE REQUIREMENTS THAT CREATE SIGNIFICANT PUBLIC SAFETY DEFICIENCIES.

SPECIAL INSPECTION (CONT'D):

E. CONTRACTOR SHALL SUBMIT A STATEMENT CONTAINING AN ACKNOWLEDGEMENT OF AWARENESS OF THE SPECIAL INSPECTION REQUIREMENTS CONTAINED ON THE DRAWINGS AND THAT THE CONSTRUCTION REQUIRING SPECIAL INSPECTIONS WILL BE MADE ACCESSIBLE FOR INSPECTIONS.

IBC TABLE 1704.3 – REQUIRED BY VERIFICATION AND INSPECTION OF STEEL CONSTRUCTION

VERIFICATION OF HIGH STRENGTH BOLTS, NUTS AND WASHERS	* CONTINUOUS	** PERIODIC	REFERENCED STANDARD	IBC REFERENCE
1. MATERIAL VERIFICATION OF HIGH–STRENGTH BOLTS, NUTS AND WASHERS:				
A. IDENTIFICATION MARKINGS TO CONFORM TO ASTM STANDARDS SPECIFIED IN THE APPROVED CONSTRUCTION DOCUMENTS.	—	X	APPLICABLE ASTM MATERIAL SPECIFICATIONS; AISC 360, SECTION A3.3	—
B. MANUFACTURERS CERTIFICATE OF COMPLIANCE REQUIRED.	—	X	—	—
2. INSPECTION OF HIGH–STRENGTH BOLTING:				
A. BEARING–TYPE CONNECTIONS.	—	X	AISC 360, SECTION M2.5	1704.3.3
B. SLIP–CRITICAL CONNECTIONS.	—	—		
3. MATERIAL VERIFICATION OF STRUCTURAL STEEL:				
A. IDENTIFICATION MARKINGS TO CONFORM TO ASTM STANDARDS SPECIFIED IN THE APPROVED CONSTRUCTION DOCUMENTS.	—	—	ASTM A 6 OR ASTM A 568	1708.4
B. MANUFACTURERS' CERTIFIED MILL TEST REPORTS.	—	—	ASTM A 6 OR ASTM A 568	
4. MATERIAL VERIFICATION OF WELD FILLER MATERIALS:				
A. IDENTIFICATION MARKINGS TO CONFORM TO AWS SPECIFICATION IN THE APPROVED CONSTRUCTION DOCUMENTS.	—	—	AISC 360, SECTION A3.5	—
B. MANUFACTURER'S CERTIFICATE OF COMPLIANCE REQUIRED.	—	—	—	—
5. INSPECTION OF WELDING: A. STRUCTURAL STEEL:				
1. COMPLETE AND PARTIAL PENETRATION GROOVE WELDS.	X	—	AWS D1.1	1704.3.2
2. MULTIPASS FILLET WELDS.	X	—		
3. SINGLE–PASS FILLET WELDS > 5/16"	X	—		
4. SINGLE–PASS FILLET WELDS ≤ 5/16"	—	X		
5. FLOOR AND ROOF DECK WELDS.	—	X	AWS D1.3	—
B. REINFORCING STEEL			AWS D1.4 ACI 318: 3.5.2	—
1. REINFORCING STEEL–RESISTING FLEXURAL AND AXIAL FORCES IN INTERMEDIATE AND SPECIAL MOMENT FRAMES, AND BOUNDARY ELEMENTS OF SPECIAL REINFORCED CONCRETE SHEAR WALLS AND SHEAR REINFORCEMENT.	X	—		
2. SHEAR REINFORCEMENT.	X	—		
3. OTHER REINFORCING STEEL.	—	X		
6. INSPECTION OF STEEL FRAME JOINT DETAILS FOR COMPLIANCE WITH APPROVED CONSTRUCTION DOCUMENTS:		X	—	1704.3.2
A. DETAILS SUCH AS BRACING AND STIFFENING.	—	—		
B. MEMBER LOCATIONS.	—	—		
C. APPLICATION OF JOINT DETAILS AT EACH CONNECTION.	—	—		

SPECIAL INSPECTION TABLE LEGEND

X REQUIRED FOR INSPECTION

— NOT REQUIRED FOR INSPECTION

* CONTINUOUS SPECIAL INSPECTION IS DEFINED AS "THE FULL–TIME OBSERVATION OF WORK REQUIRING SPECIAL INSPECTION BY AN APPROVED SPECIAL INSPECTOR WHO IS PRESENT IN THE AREA WHERE THE WORK IS BEING DONE." PER THE IBC 2006

** PERIODIC SPECIAL INSPECTION IS DEFINED AS " THE PART–TIME OR INTERMITTENT OBSERVATION OF WORK REQUIRING SPECIAL INSPECTION BY AN APPROVED SPECIAL INSPECTOR WHO IS PRESENT IN THE AREA WHERE THE WORK HAS BEEN OR IS BEING PERFORMED AND AT THE COMPLETION OF THE WORK." PER THE IBC 2006

IBC TABLE 1704.4 – REQUIRED VERIFICATION AND INSPECTION OF CONCRETE CONSTRUCTION

VERIFICATION AND INSPECTION	* CONTINUOUS	** PERIODIC	REFERENCED STANDARD	IBC REFERENCE
1. INSPECTION OF REINFORCING STEEL, INCLUDING PLACEMENT.	—	X	ACI 318: 3.5, 7.1–7.7	1913.4
2. INSPECT BOLTS TO BE INSTALLED IN CONCRETE PRIOR TO AND DURING PLACEMENT OF CONCRETE WHERE ALLOWABLE LOADS HAVE BEEN INCREASED.	X	—	—	1911.5
3. VERIFYING USE OF REQUIRED DESIGN MIX.	—	X	ACI 318: CH. 4, 5.2–5.4	1904.2.2, 1913.2, 1913.3
4. AT THE TIME FRESH CONCRETE IS SAMPLED TO FABRICATE SPECIMENS FOR STRENGTH TESTS, PERFORM SLUMP AND AIR CONTENT TESTS, AND DETERMINE THE TEMPERATURE OF THE CONCRETE.	X	—	ASTM C 172, ASTM C 31, ACI 318: 5.6, 5.8	1913.10
5. INSPECTION OF CONCRETE AND PLACEMENT FOR PROPER APPLICATION TECHNIQUES.	—	X	ACI 318: 5.9, 5.10	1913.6, 1913.7, 1913.8
6. INSPECTION FOR MAINTENANCE OF SPECIFIED CURING TEMPERATURE AND TECHNIQUES.	—	X	ACI 318: 5.11–5.13	1913.9
7. INSPECT FORMWORK FOR SHAPE, LOCATION AND DIMENSIONS OF THE CONCRETE MEMBER BEING FORMED.	—	X	ACI 318: 6.1.1	—

IBC TABLE 1704.5.1 – REQUIRED VERIFICATION & INSPECTION OF MASONRY CONSTRUCTION – LEVEL 1 SPECIAL INSPECTION

INSPECTION TASK	* CONTINUOUS	** PERIODIC	REFERENCED FOR CRITERIA		
			IBC SECTION	ACI 530/ ASCE5/TMS 402	ACI 530.1/ ASCE6/TMS 602
1. AS MASONRY CONSTRUCTION BEGINS, THE FOLLOWING SHALL BE VERIFIED TO ENSURE COMPLIANCE:					
A. PROPORTIONS OF SITE–PREPARED MORTAR.	—	X	—	—	ART. 2.6A
B. CONSTRUCTION OF MORTAR JOINTS.	—	X	—	—	ART. 3.3B
C. LOCATION OF REINFORCEMENT, CONNECTORS, AND ANCHORAGE.	—	X	—	SEC. 1.13	ART. 3.4, 3.6A
2. THE INSPECTION PROGRAM SHALL VERIFY:					
A. SIZE AND LOCATION OF STRUCTURAL ELEMENTS.	—	X	—	—	ART. 3.3G
B. TYPE, SIZE AND LOCATION OF ANCHORS, INCLUDING OTHER DETAILS OF ANCHORAGE OF MASONRY TO STRUCTURAL MEMBERS, FRAMES OR OTHER CONSTRUCTION.	—	X	—	SEC. 1.2.2(E), 2.1.4, 3.1.6	—
C. SPECIFIED SIZE, GRADE AND TYPE OF REINFORCEMENT.	—	X	—	SEC. 1.13	ART. 2.4, 3.4
D. PROTECTION OF MASONRY DURING WEATHER (TEMPERATURE ABOVE 90°F).	—	X	SEC. 2104.3, 2104.4	—	ART. 1.8C, 1.8D
3. PRIOR TO GROUTING, THE FOLLOWING SHALL BE VERIFIED TO ENSURE COMPLIANCE:					
A. GROUT SPACE IS CLEAN.	—	X	—	—	ART. 3.2D
B. PLACEMENT OF REINFORCEMENT AND CONNECTORS AND ANCHORAGES.	—	X	—	SEC. 1.13	ART. 3.4
C. CONSTRUCTION OF MORTAR JOINTS.	—	X	—	—	ART. 3.3DB
4. GROUT PLACEMENT SHALL BE VERIFIED TO ENSURE COMPLIANCE WITH CODE AND CONSTRUCTION DOCUMENT PROVISIONS.	X	—	—	—	ART. 3.5
5. PREPARATION OF ANY REQUIRED GROUT SPECIMENS, MORTAR SPECIMENS AND/OR PRISMS SHALL BE OBSERVED.	X	—	SEC. 2105.2.2, 2105.3	—	ART. 1.4
6. COMPLIANCE WITH REQUIRED INSPECTION PROVISIONS OF THE CONSTRUCTION DOCUMENTS AND THE APPROVED SUBMITTALS SHALL BE VERIFIED.	—	X	—	—	ART. 1.5

IWAMOTO & ASSOCIATES, LLC
STRUCTURAL ENGINEERS
98–029 HOKAHA STREET, SUITE 37
AIEA, HAWAII 96701
PH: (808) 486–5202
FAX: (808)486–5206
email: mail@iwamotolic.com

SOUTH MAUI COMMUNITY PARK RECREATION CENTER
LILOA DRIVE, KIHEI, HAWAII
TMK: (2)–2–2–24:3

NO.	REVISION	DATE

RON E. IWAMOTO
LICENSED PROFESSIONAL ENGINEER
No. 8871–S
HAWAII, U.S.A.

Expiration date of License: 4/30/18

THIS WORK WAS PREPARED BY ME OR UNDER MY SUPERVISION AND CONSTRUCTION OF THIS PROJECT WILL BE UNDER MY OBSERVATION

GENERAL NOTES

PROJECT NO.	1314
CHECKED BY:	RI
DRAWN BY:	IB
DATE:	11/01/16
SCALE:	AS SHOWN
SHT NO.: ___OF___	S-1.1

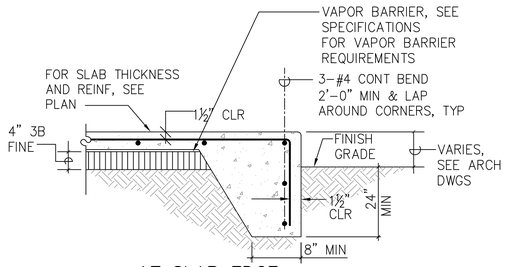

AT SLAB EDGE

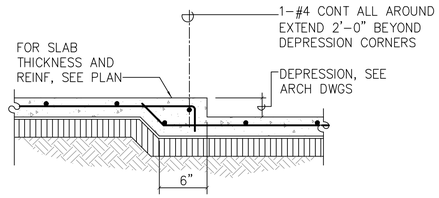

AT DEPRESSED SLAB

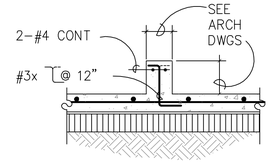

AT CURB

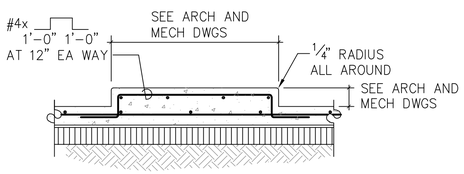

AT EQUIPMENT PAD

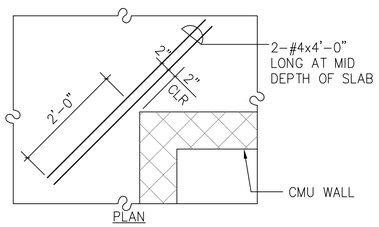

REINF AT REENTRANT CORNERS

1 S-1.2 TYPICAL SLAB-ON-GRADE DETAILS

NOT TO SCALE

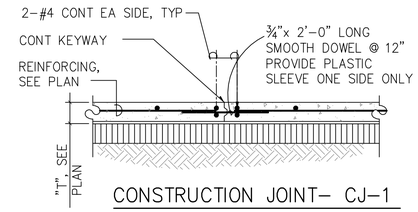

CONSTRUCTION JOINT- CJ-1

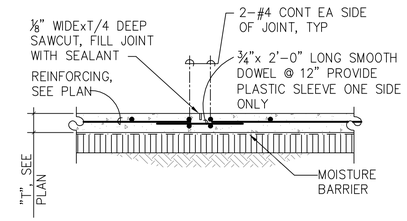

CONTROL JOINT CJ-2

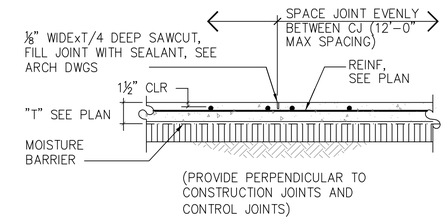

SAWCUT JOINT (TYPICAL)

2 S-1.2 TYPICAL SLAB JOINT DETAILS

NOT TO SCALE

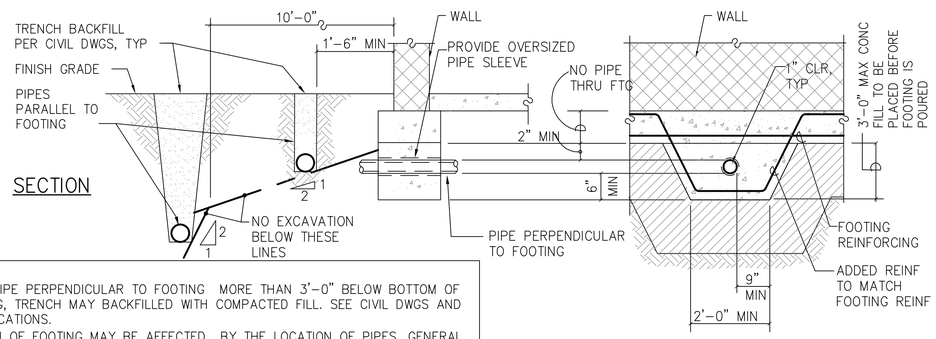

NOTES:
1. FOR PIPE PERPENDICULAR TO FOOTING MORE THAN 3'-0" BELOW BOTTOM OF FOOTING, TRENCH MAY BACKFILLED WITH COMPACTED FILL. SEE CIVIL DWGS AND SPECIFICATIONS.
2. DEPTH OF FOOTING MAY BE AFFECTED BY THE LOCATION OF PIPES, GENERAL CONTRACTOR SHALL DETERMINE EXACT DEPTH AND LOCATION OF PIPES PRIOR TO EXCAVATION FOR FOOTING.

3 S-1.2 TYPICAL PIPE AT FOOTING DETAILS

NOT TO SCALE

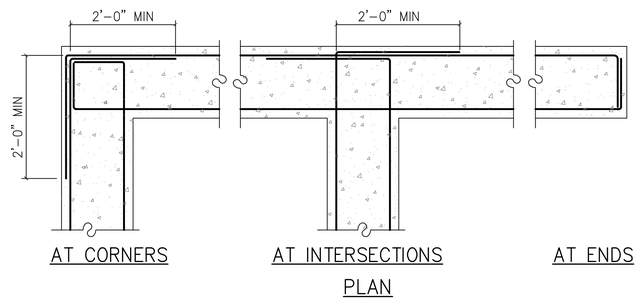

AT CORNERS AT INTERSECTIONS AT ENDS

PLAN

TYPICAL REINFORCING AT CONCRETE WALL FOOTING ENDS AND INTERSECTIONS

4 S-1.2

NOT TO SCALE

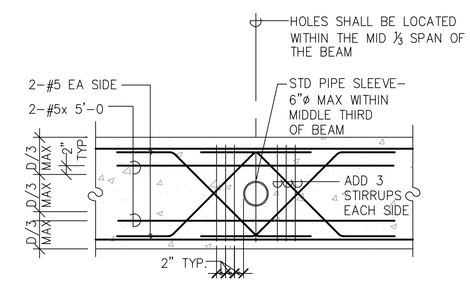

TYPICAL PIPE OPENING THRU CONCRETE TIE BEAM

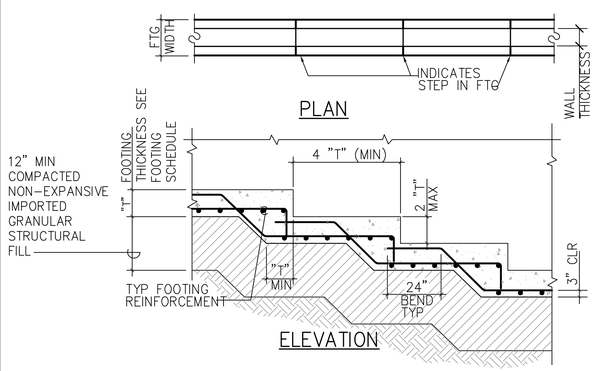

5 S-1.2 TYPICAL STEPPED WALL FOOTING DETAIL

NOT TO SCALE

BOLT DIAMETER	MINIMUM EMBEDMENT
½"	4"
⅝"	5"
¾"	6"

NOTE: POSSIBLE INSTALLATION PROCEDURE NUMBERED FOR MASONRY

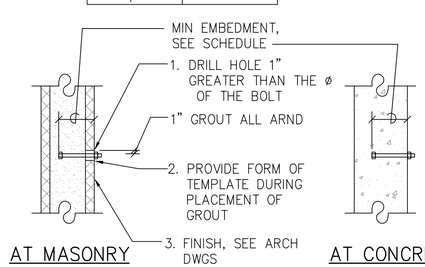

AT MASONRY AT CONCRETE

6 S-1.2 TYPICAL ANCHOR BOLT DETAIL

NOT TO SCALE

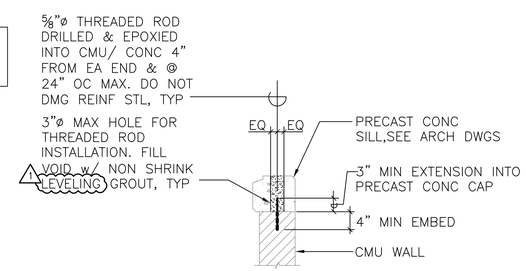

TYPICAL PRECAST CONCRETE SILL CONNECTION DETAIL

7 S-1.2

NOT TO SCALE

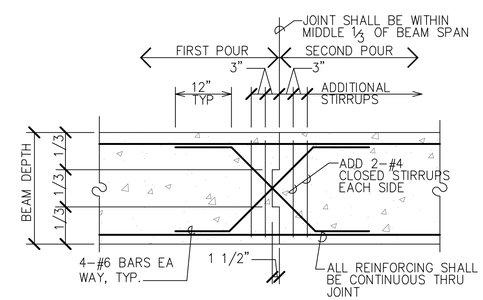

TYPICAL CONSTRUCTION JOINT IN CONCRETE TIE BEAM

8 S-1.2 TYPICAL CONC TIE BEAM DETAILS

NOT TO SCALE

IWAMOTO & ASSOCIATES, LLC
STRUCTURAL ENGINEERS
98-029 HOKAHA STREET, SUITE 37
AIEA, HAWAII 96701
PH: (808) 486-5202
FAX: (808)486-5206
email: mail@iwamotollc.com

SOUTH MAUI COMMUNITY PARK RECREATION CENTER

LILOA DRIVE, KIHEI, HAWAII

TMK: (2)-2-2-24:3

NO.	REVISION	DATE

RON E. IWAMOTO
LICENSED PROFESSIONAL ENGINEER
No. 8871-S
HAWAII, U.S.A.

Expiration date of License: 4/30/18

THIS WORK WAS PREPARED BY ME OR UNDER MY SUPERVISION AND CONSTRUCTION OF THIS PROJECT WILL BE UNDER MY OBSERVATION

TYPICAL DETAILS

PROJECT NO.	1314
CHECKED BY:	RI
DRAWN BY:	IB
DATE:	11/01/16
SCALE:	AS SHOWN
SHT NO.: ___OF___	S-1.2

DRAWING

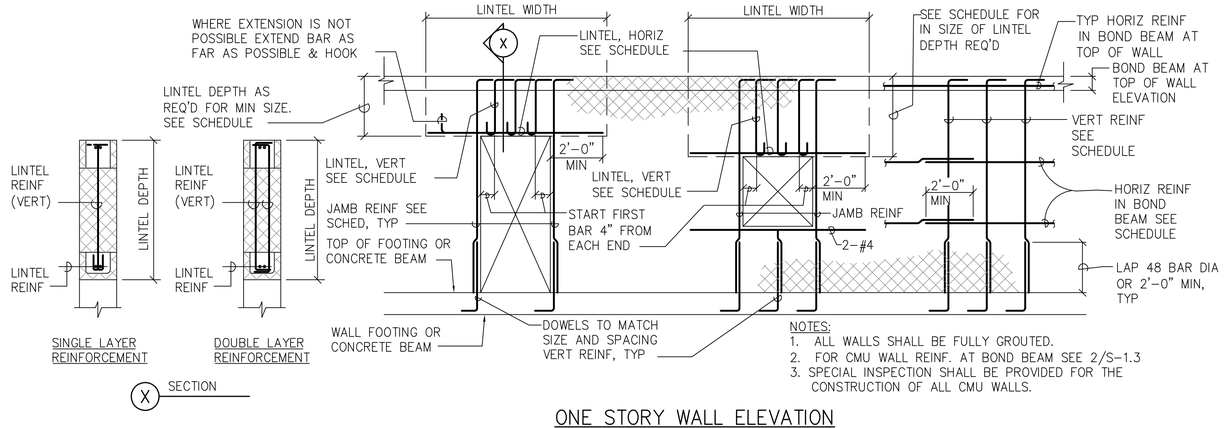

NOTES:
1. ALL WALLS SHALL BE FULLY GROUTED.
2. FOR CMU WALL REINF. AT BOND BEAM SEE 2/S-1.3
3. SPECIAL INSPECTION SHALL BE PROVIDED FOR THE CONSTRUCTION OF ALL CMU WALLS.

ONE STORY WALL ELEVATION

1 / S-1.3 TYPICAL CMU WALL ELEVATION

NOT TO SCALE

CMU WALL REINFORCING SCHEDULE				
LOCATION	WALL THICKNESS	BAR SIZE AND SPACING		
		HORIZ	VERT	REMARKS
W-1	8"	2-#4 AT 32"	#5 AT 16" CENTERED	
W-2	8"	2-#5 AT 24"	#5 AT 16" CENTERED	
W-3	12"	2-#5 AT 32"	#6 AT 16" EACH FACE	

OPENING SCHEDULE – CMU WALL TYPES W-1 & W-2					
OPENING WIDTH	LINTEL DEPTH	REINFORCING			
		JAMB	LINTEL HORIZ U.O.N.	LINTEL VERT	REMARKS
W ≤ 4'-0"	1'-4"	4-#5	2-#4	#4 AT 16"	
4'-0" < W ≤ 8'-0"	2'-0"	4-#5	2-#5	#4 AT 16"	
8'-0" < W ≤ 14'-0"	3'-4"	4-#5	2-#5	#4 AT 16"	

OPENING SCHEDULE – CMU WALL TYPE W-3					
OPENING WIDTH	LINTEL DEPTH	REINFORCING			
		JAMB	LINTEL HORIZ U.O.N.	LINTEL VERT	REMARKS
W ≤ 8'-0"	2'-8"	2-#5	2-#5	#5 AT 8"	
8'-0" < W ≤ 14'-0"	4'-0"	2-#6	2-#6	#5 AT 8"	
14'-0" < W ≤ 17'-0"	4'-8"	2-#6	2-#6	#5 AT 8"	

NOTE:
1. SEE 5/S-1.3 FOR TYPICAL REBAR AND HEADED STUD WELDING DETAILS.

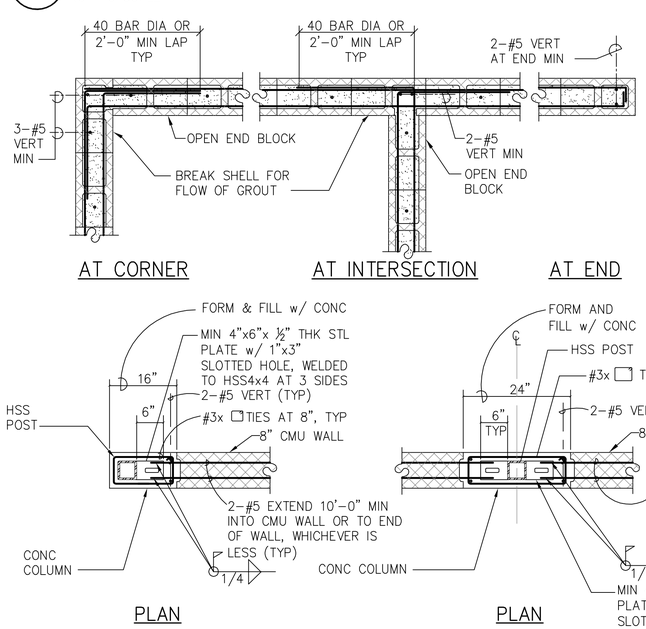

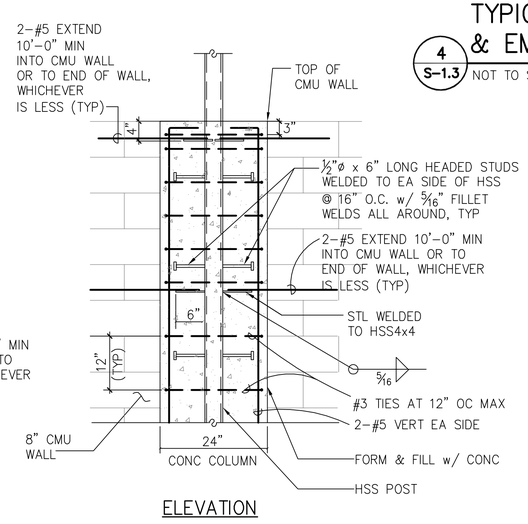

2 / S-1.3 TYPICAL CMU WALL REINFORCING AT BOND BEAM

NOT TO SCALE

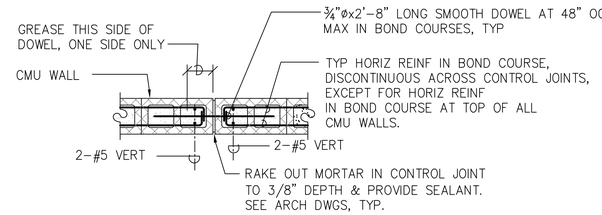

NOTES:
1. CONTROL JOINT SHALL BE CONTINUOUS VERTICAL LINE FROM TOP OF FOOTING TO TOP OF WALL.
2. IMPORTANT: ALL HORIZONTAL REINFORCING SHALL BE DISCONTINUOUS ACROSS CONTROL JOINTS, EXCEPT FOR BOND BEAM REINFORCING AT THE TOP OF ALL CMU WALLS.

3 / S-1.3 TYPICAL CMU WALL CONTROL JOINT DETAIL

NOT TO SCALE

NOTES:
1. LENGTHS ARE FOR CONCRETE BEAMS & COLUMNS WITH REBAR SPACED 1 BAR DIAMETER MIN OC. AND CONCRETE WALLS WITH REBARS SPACED 2 BAR DIAMETERS MIN OC INCREASE BAR LENGTH 50% FOR BARS SPACED CLOSER THAN MINIMUMS SPECIFIED.
2. "TOP BARS" ARE HORIZONTAL BARS WITH 12" OR MORE OF CONCRETE CAST BELOW.
3. BEND & HOOKS SHALL BE "STANDARD HOOKS" IN ACCORDANCE WITH ACI 318

MINIMUM SPLICE & EMBEDMENT LENGTHS FOR CONCRETE					
BAR SIZE	LAP SPLICE		EMBEDMENT		
			STRAIGHT		
	BOT BAR OR WALL BAR	TOP BAR	BOT BAR OR WALL BAR	TOP BAR	W/ STD HOOK
#3, #4	29"	38"	22"	29"	11"
#5	36"	47"	28"	36"	14"
#6	43"	56"	33"	43"	17"
#7	63"	82"	48"	63"	20"

MINIMUM SPLICE & EMBEDMENT LENGTHS FOR MASONRY					
BAR SIZE	LAP SPLICE		EMBEDMENT		
			STRAIGHT		
	EDGE BAR	CENTERED BAR	EDGE BAR	CENTERED BAR	W/ STD HOOK
#3, #4	26"	24"	26"	24"	11"
#5	40"	30"	40"	30"	14"
#6	74"	36"	74"	36"	17"

4 / S-1.3 TYPICAL REBAR SPLICE & EMBEDMENT LENGTH SCHEDULE

NOT TO SCALE

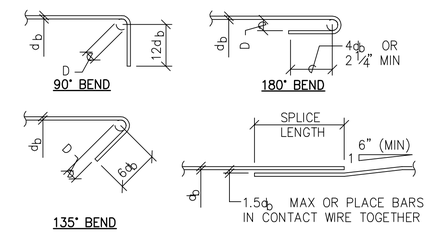

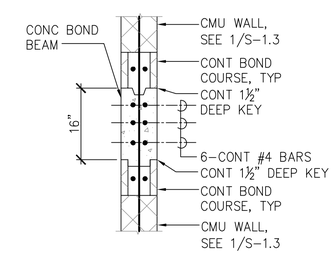

6 / S-1.3 TYPICAL CONC BOND BEAM DETAIL

NOT TO SCALE

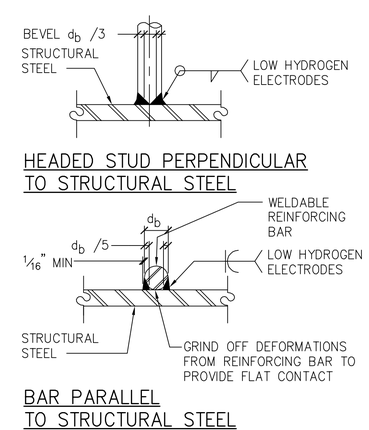

NOTES:
1. ALL WELDING SHALL CONFORM TO AWS D1.4
2. SEE GENERAL NOTES FOR WELDED REINFORCING STEEL REQUIREMENTS.

d b	FILLET WELD
5/8"ø	5/16
3/4"ø	3/8

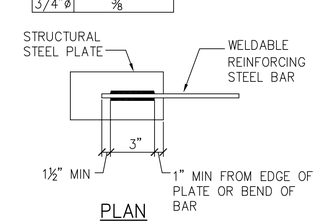

5 / S-1.3 TYPICAL REBAR & STUD WELDING DETAIL

NOT TO SCALE

IWAMOTO & ASSOCIATES, LLC
STRUCTURAL ENGINEERS
98-029 HOKAHA STREET, SUITE 37
AIEA, HAWAII 96701
PH: (808) 486-5202
FAX: (808)486-5206
email: mail@iwamotolic.com

SOUTH MAUI COMMUNITY PARK RECREATION CENTER

LILOA DRIVE, KIHEI, HAWAII

TMK: (2)-2-2-24:3

NO.	REVISION	DATE

RON E. IWAMOTO LICENSED PROFESSIONAL ENGINEER No. 8871-S HAWAII, U.S.A.

Expiration date of license: 4/30/18

THIS WORK WAS PREPARED BY ME OR UNDER MY SUPERVISION AND CONSTRUCTION OF THIS PROJECT WILL BE UNDER MY OBSERVATION

TYPICAL DETAILS

PROJECT NO.	1314
CHECKED BY:	RI
DRAWN BY:	IB
DATE:	11/01/16
SCALE:	AS SHOWN
SHT NO.: ___OF___	S-1.3

METAL ROOF DECK SCHEDULE					
TYPE GAGE	MINIMUM SECTION PROPERTIES			SECTION	REMARKS
	I in^4/FT	+Sin^3/FT	-Sin^3/FT		
1 ½" VERCO PLB-36 20 GA ROOF DECK OR APPROVED EQUAL	0.216	0.235	0.248	1 ½"	

NOTES:
1. SEE PLANS FOR EXTENT AND ORIENTATION OF METAL DECK.
2. SEE 2/S-1.4 FOR METAL ROOF DECK FASTENING TO SUPPORTS.

1 S-1.4 METAL ROOF DECK SCHEDULE
NOT TO SCALE

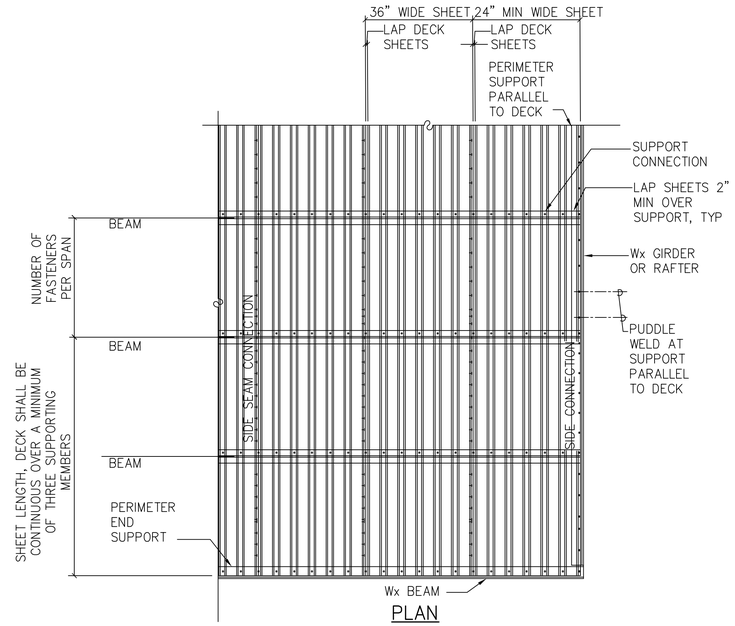

PLAN

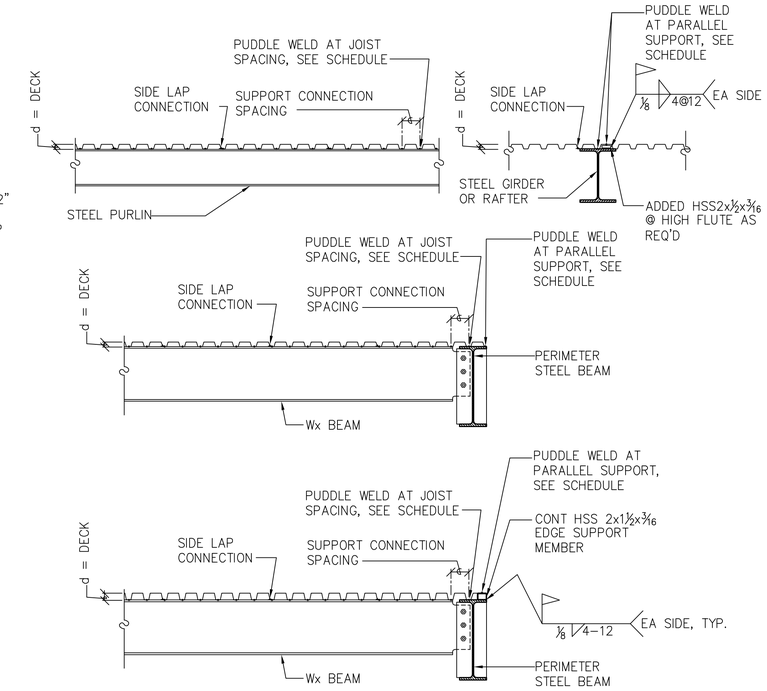

DIAPHRAGM CONNECTION TO COLD FORMED STEEL		
AT SUPPORT PER 36" SHEET WIDTH	SIDE LAP CONNECTION	AT SUPPORT PARALLEL TO DECK
5-#12 SCREWS	VSC AT 12" OC	#12 SCREWS AT 12"

DIAPHRAGM CONNECTION TO STRUCTURAL STEEL		
AT SUPPORT PER 36" SHEET WIDTH	SIDE LAP CONNECTION	AT SUPPORT PARALLEL TO DECK
5-5/8"ø PUDDLE WELDS	VSC AT 8" OC	5/8"ø PUDDLE WELDS AT 12"

NOTE:
ALL DECK SHALL BE MINIMUM 3 SPAN CONTINUIOUS CONDITION AND 36" WIDE SHEETS AND GALVANIZED

2 S-1.4 TYPICAL METAL ROOF DECK FASTENING SCHEDULE
NOT TO SCALE

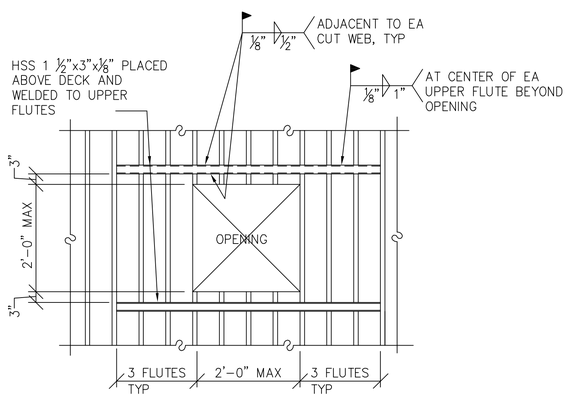

OPENING AT METAL ROOF DECK

NOTES:
1. REINFORCING IS NOT REQUIRED FOR HOLES LESS THAN 6 INCHES IN DIAMETER AND CUTTING NO MORE THAN 1 WEB.
2. IF OPENING OCCURS IN ONE DECKING UNIT, THE OPENING MAY BE CUT PRIOR TO POURING OF CONCRETE.

3 S-1.4 TYPICAL OPENING IN METAL ROOF DECK
NOT TO SCALE

IWAMOTO & ASSOCIATES, LLC
STRUCTURAL ENGINEERS
98-029 HOKAHA STREET, SUITE 37
AIEA, HAWAII 96701
PH: (808) 486-5202
FAX: (808)486-5206
email: mail@iwamotollc.com

SOUTH MAUI COMMUNITY PARK RECREATION CENTER
LILOA DRIVE, KIHEI, HAWAII
TMK: (2)-2-2-24:3

NO.	REVISION	DATE

RON E. IWAMOTO LICENSED PROFESSIONAL ENGINEER No. 8871-S HAWAII, U.S.A.

Expiration date of License: 4/30/18

THIS WORK WAS PREPARED BY ME OR UNDER MY SUPERVISION AND CONSTRUCTION OF THIS PROJECT WILL BE UNDER MY OBSERVATION

TYPICAL DETAILS

PROJECT NO.	1314
CHECKED BY:	RI
DRAWN BY:	IB
DATE:	11/01/16
SCALE:	AS SHOWN
SHT NO.: ___OF___	S-1.4

SHEAR PLATE CONNECTION SCHEDULE				
TYPE OF BEAM	ROOF FRAMING MEMBERS			
BEAM SIZE	W8x, W10x	W12x	W16x	W18x
CONNECTION PLATE THICKNESS	¼"	⅜"	½"	½"
BOLT TYPE	A325N	A325N	A325N	A325N
BOLT DIAMETER	¾"	¾"	¾"	¾"
NUMBER OF BOLTS *	2	3	4	5
MIN BOLT SPACING *	3	3	3	3
MIN EDGE DISTANCE *	1½"	1½"	1½"	1½"
FILLET WELD	¼"	¼"	5/16"	5/16"
* UNLESS NOTED OTHERWISE OR INDICATED ON SECTIONS				

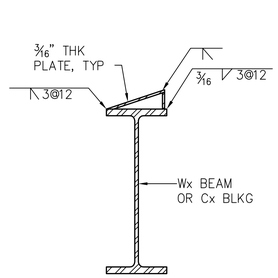

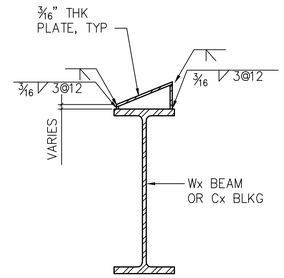

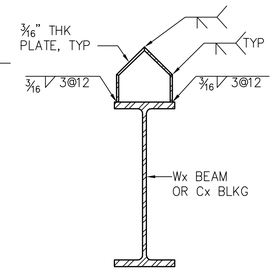

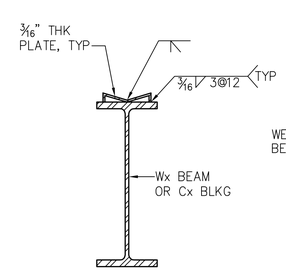

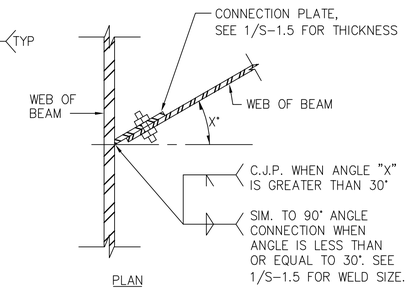

1 S-1.5 TYPICAL SHEAR PLATE CONNECTION SCHEDULE

NOT TO SCALE

2 S-1.5 TYPICAL BENT PLATE DETAIL

NOT TO SCALE

3 S-1.5 TYPICAL SKEWED BEAM CONNECTION

NOT TO SCALE

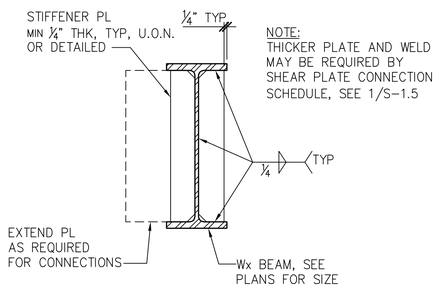

4 S-1.5 TYPICAL STIFFENER PLATE DETAIL

NOT TO SCALE

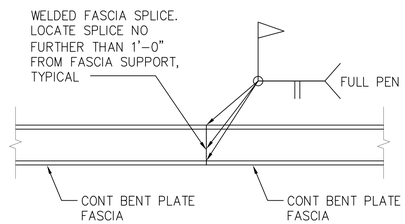

5 S-1.5 TYPICAL CONTINUOUS FASCIA SPLICE DETAIL

NOT TO SCALE

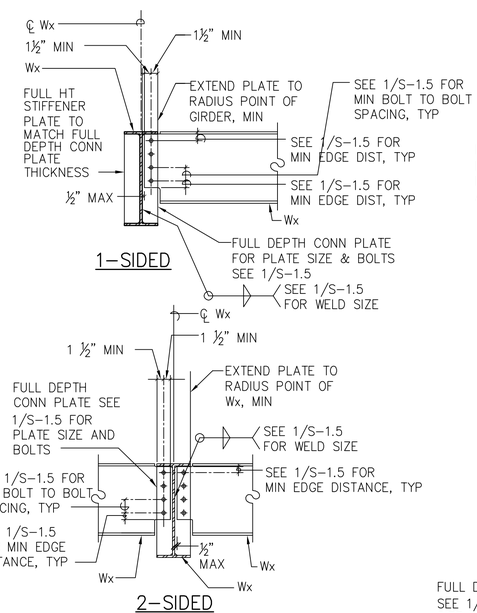

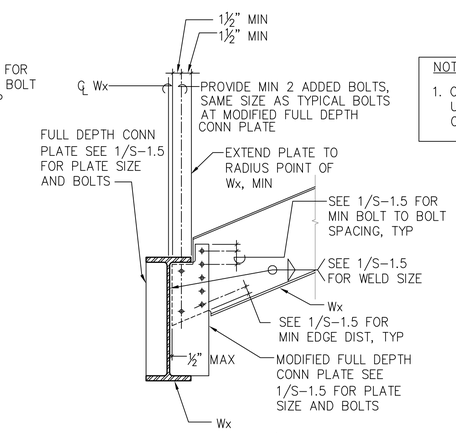

NOTES:

1. CONNECTIONS SHOWN ARE TYPICAL UNLESS SPECIFICALLY DETAILED OTHERWISE.

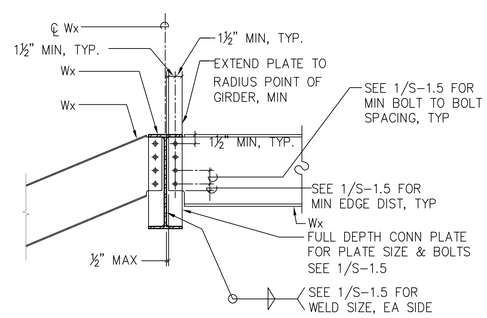

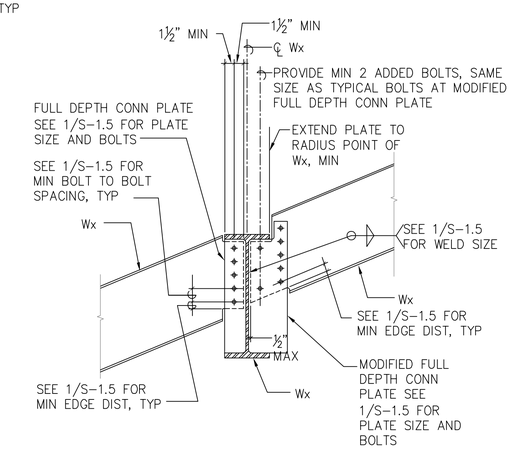

6 S-1.5 TYPICAL BEAM TO BEAM OR SHEAR PLATE CONNECTIONS

NOT TO SCALE

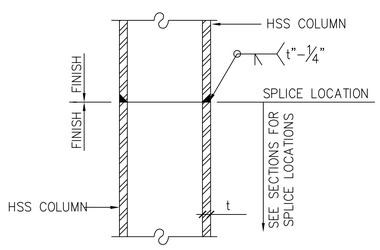

7 S-1.5 TYPICAL COLUMN SPLICE DETAIL

SCALE: 3/4"=1'-0"

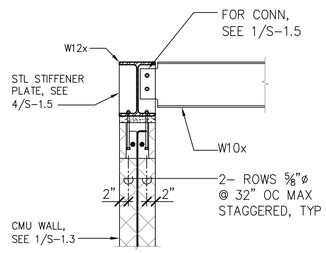

8 S-1.5 SECTION

SCALE: 3/4"=1'-0"

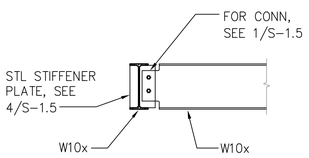

9 S-1.5 SECTION

SCALE: 3/4"=1'-0"

IWAMOTO & ASSOCIATES, LLC
STRUCTURAL ENGINEERS
98-029 HOKAHA STREET, SUITE 37
AIEA, HAWAII 96701
PH: (808) 486-5202
FAX: (808)486-5206
email: mail@iwamotollc.com

SOUTH MAUI COMMUNITY PARK RECREATION CENTER

LILOA DRIVE, KIHEI, HAWAII

TMK: (2)-2-2-24:3

NO.	REVISION	DATE

RON E. IWAMOTO LICENSED PROFESSIONAL ENGINEER No. 8871-S HAWAII, U.S.A.

Expiration date of License: 4/30/18

THIS WORK WAS PREPARED BY ME OR UNDER MY SUPERVISION AND CONSTRUCTION OF THIS PROJECT WILL BE UNDER MY OBSERVATION

TYPICAL DETAILS & MECH PLATFORM FRAMING SECTIONS

PROJECT NO.	1314
CHECKED BY:	RI
DRAWN BY:	IB
DATE:	11/01/16
SCALE:	AS SHOWN
SHT NO.: ___OF___	S-1.5

LEGEND:

	INDICATES PARTIAL HEIGHT CMU WALL
	INDICATES FULL HEIGHT CMU WALL
	INDICATES DEPRESSED SLAB OR CHANGE IN SLAB ELEVATION. SEE ARCH DRAWINGS.
RFC–1	INDICATES PRE–ENGINEERED METAL BUILDING RIGID FRAME COLUMN TYPE.
F–1	INDICATES CONC SPREAD FOOTING TYPE, SEE SECTIONS
WF–1	INDICATES WALL FOOTING TYPE. SEE SECTIONS
TB–1	INDICATES TIE BEAM FOOTING TYPE, SEE FOUNDATION SECTIONS
CJ–1	INDICATES CONTROL JOINT TYPE, SEE 2/S–1.2
W–1	INDICATES CMU WALL TYPE. ALL WALLS SHOWN SHALL BE CMU WALL TYPE W–1 UNLESS NOTED OTHERWISE.

FOUNDATION NOTES:

1. REFERENCE ELEVATION (0.00) = FINISH FLOOR ELEVATION.
2. (–1.33') INDICATES MINIMUM TOP OF FOOTING ELEVATION RELATIVE TO FINISH FLOOR ELEVATION.
3. THICKNESS OF FOOTINGS, SHOWN AS MINIMUM ON FOUNDATION SECTIONS, SHALL BE MAINTAINED AT ALL SLOPED AND DEPRESSED AREAS. SEE 5/S–1.2
4. FOR DIMENSIONS NOT SHOWN SEE THE ARCHITECTURAL DRAWINGS.
5. BOTTOM OF FOOTING SHALL BE MIN 1'–0" BELOW THE LOWER OF THE REFERENCE ELEVATION OR LOWEST ADJACENT FINISHED GRADE, U.O.N.
6. FOR WATERPROOFING REQUIREMENTS AND DETAILS SEE ARCHITECTURAL DRAWINGS.
7. IMPORTANT NOTE: CONTRACTOR SHALL LOCATE ANY EXISTING LINES AND PIPES BELOW THE FOUNADTION OF THE STRUCTURE. DO NOT DAMAGE EXISTING LINES OR PIPES.
8. FOR TYPICAL CONT CONC BOND BEAM DETAIL, SEE 6/S–1.3

SLAB ON GRADE NOTES:

1. THICKNESSES OF SLAB–ON–GRADE SHOWN ARE MINIMUM AND SHALL BE MAINTAINED AT ALL SLOPED, RAISED, AND DEPRESSED AREAS. SEE 1/S–1.2 FOR TYPICAL SLAB–ON–GRADE DETAILS.
2. FOR FLOOR ELEVATIONS, DEPRESSED SLAB LOCATIONS & SLOPES TO DRAIN, SEE ARCHITECTURAL DRAWINGS.
3. SLAB SHALL BE POURED WITH A MINIMUM SEVEN (7) DAYS LAPSE TIME BETWEEN ADJACENT POURS.

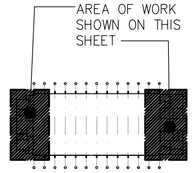

KEY PLAN
NOT TO SCALE

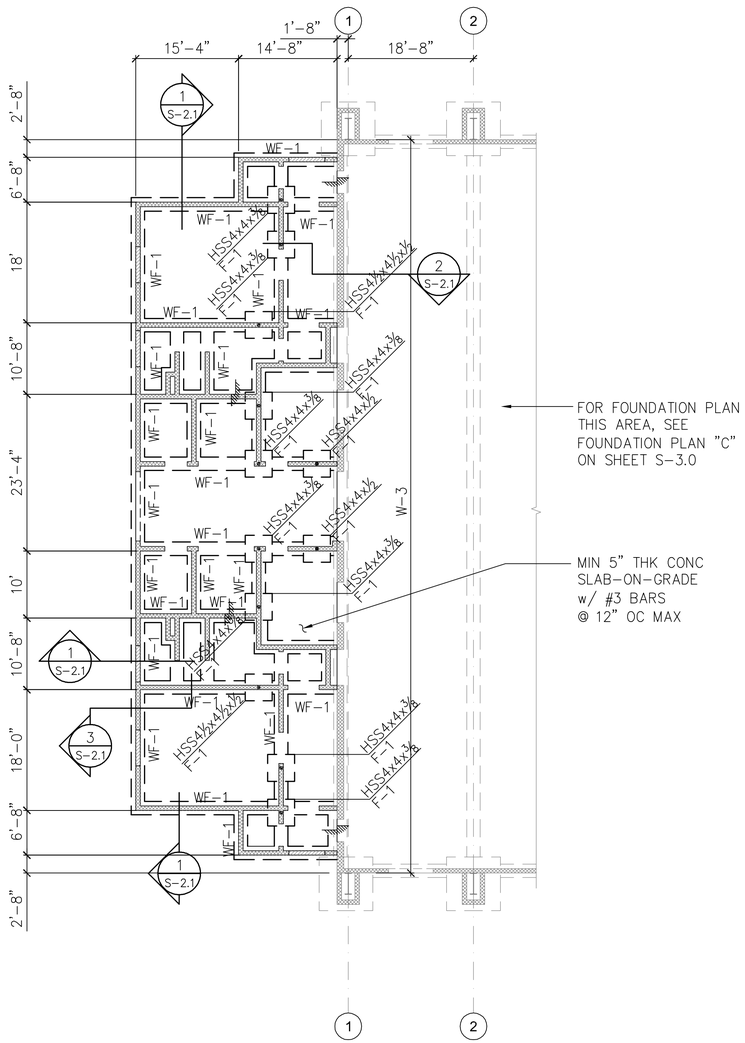

FOUNDATION PLAN "A"
SCALE: 3/32"= 1'–0"

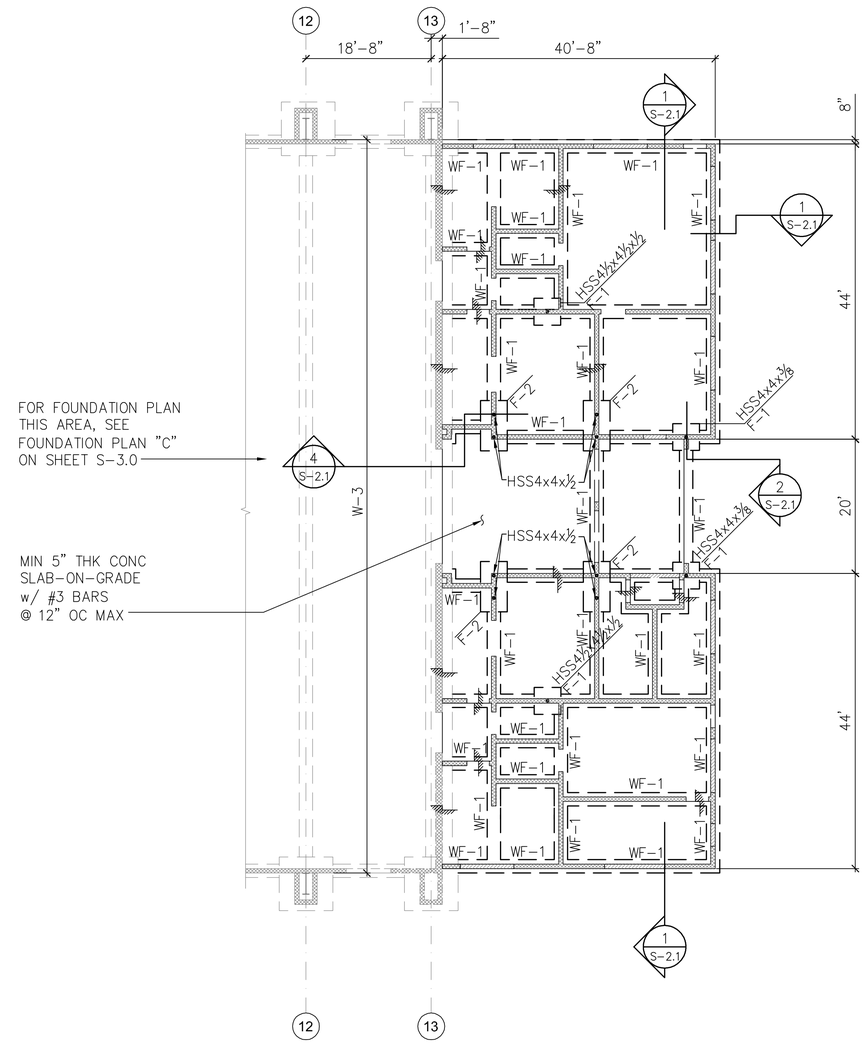

FOUNDATION PLAN "B"
SCALE: 3/32"= 1'–0"

IWAMOTO & ASSOCIATES, LLC
STRUCTURAL ENGINEERS
98–029 HOKAHA STREET, SUITE 37
AIEA, HAWAII 96701
PH: (808) 486–5202
FAX: (808)486–5206
email: mail@iwamotollc.com

SOUTH MAUI COMMUNITY PARK RECREATION CENTER
LILOA DRIVE, KIHEI, HAWAII
TMK: (2)–2–2–24:3

NO.	REVISION	DATE

RON E. IWAMOTO
LICENSED PROFESSIONAL ENGINEER
No. 8871–S
HAWAII, U.S.A.

Expiration date of License: 4/30/18

THIS WORK WAS PREPARED BY ME OR UNDER MY SUPERVISION AND CONSTRUCTION OF THIS PROJECT WILL BE UNDER MY OBSERVATION

FOUNDATION PLAN "A" & FOUNDATION PLAN "B"

PROJECT NO.	1314
CHECKED BY:	RI
DRAWN BY:	IB
DATE:	11/01/16
SCALE:	AS SHOWN
SHT NO.: ___OF___	S-2.0

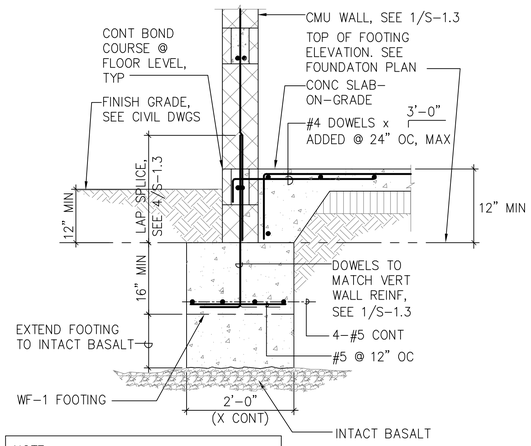

NOTE:
U.N.O IF INTACT BASALT IS ENCOUNTERED BEFORE MIN FOOTING EMBED DEPTH & THICKNESS IS ACHIEVED CONTRACTOR SHALL EXCAVATE BASALT SUCH THAT MIN FOOTING RECOMMENDATIONS SHOWN ARE MAINTAINED.

1 S-2.1 SECTION
SCALE: 3/4"=1'-0"

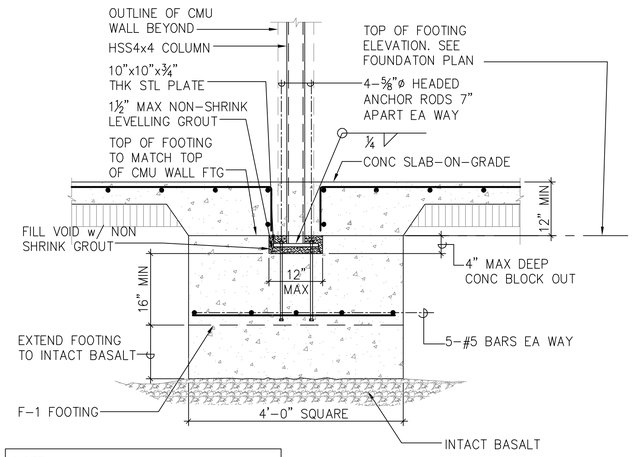

NOTE:
U.N.O IF INTACT BASALT IS ENCOUNTERED BEFORE MIN FOOTING EMBED DEPTH & THICKNESS IS ACHIEVED CONTRACTOR SHALL EXCAVATE BASALT SUCH THAT MIN FOOTING RECOMMENDATIONS SHOWN ARE MAINTAINED.

2 S-2.1 SECTION
SCALE: 3/4"=1'-0"

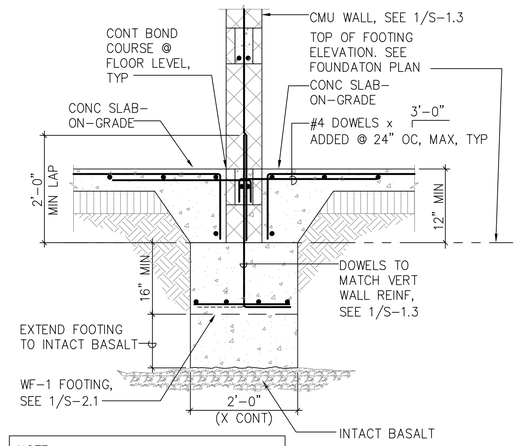

NOTE:
U.N.O IF INTACT BASALT IS ENCOUNTERED BEFORE MIN FOOTING EMBED DEPTH & THICKNESS IS ACHIEVED CONTRACTOR SHALL EXCAVATE BASALT SUCH THAT MIN FOOTING RECOMMENDATIONS SHOWN ARE MAINTAINED.

3 S-2.1 SECTION
SCALE: 3/4"=1'-0"

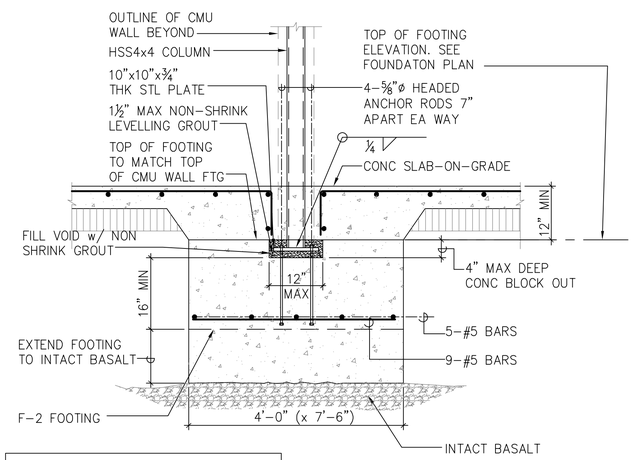

NOTE:
U.N.O IF INTACT BASALT IS ENCOUNTERED BEFORE MIN FOOTING EMBED DEPTH & THICKNESS IS ACHIEVED CONTRACTOR SHALL EXCAVATE BASALT SUCH THAT MIN FOOTING RECOMMENDATIONS SHOWN ARE MAINTAINED.

4 S-2.1 SECTION
SCALE: 3/4"=1'-0"

IWAMOTO & ASSOCIATES, LLC
STRUCTURAL ENGINEERS
98-029 HOKAHA STREET, SUITE 37
AIEA, HAWAII 96701
PH: (808) 486-5202
FAX: (808)486-5206
email: mail@iwamotolic.com

SOUTH MAUI COMMUNITY PARK RECREATION CENTER

LILOA DRIVE, KIHEI, HAWAII
TMK: (2)-2-2-24:3

NO.	REVISION	DATE

RON E. IWAMOTO
LICENSED PROFESSIONAL ENGINEER
No. 8871-S
HAWAII, U.S.A.

Expiration date of License: 4/30/18

THIS WORK WAS PREPARED BY ME OR UNDER MY SUPERVISION AND CONSTRUCTION OF THIS PROJECT WILL BE UNDER MY OBSERVATION

SECTIONS

PROJECT NO.	1314
CHECKED BY:	RI
DRAWN BY:	IB
DATE:	11/01/16
SCALE:	AS SHOWN
SHT NO.: ___OF___	S-2.1

DRAWING

LEGEND:

	INDICATES PARTIAL HEIGHT CMU WALL
	INDICATES FULL HEIGHT CMU WALL
	INDICATES DEPRESSED SLAB OR CHANGE IN SLAB ELEVATION. SEE ARCH DRAWINGS.
RFC–1	INDICATES PRE–ENGINEERED METAL BUILDING RIGID FRAME COLUMN TYPE.
F–1	INDICATES CONC SPREAD FOOTING TYPE, SEE SECTIONS
WF–1	INDICATES WALL FOOTING TYPE. SEE SECTIONS
TB–1	INDICATES TIE BEAM FOOTING TYPE, SEE FOUNDATION SECTIONS
CJ–1	INDICATES CONTROL JOINT TYPE, SEE 2/S–1.2
W–1	INDICATES CMU WALL TYPE. ALL WALLS SHOWN SHALL BE CMU WALL TYPE W–1 UNLESS NOTED OTHERWISE.
PEMB	INDICATES PRE–ENGINEERED METAL BUILDING

FOUNDATION NOTES:

1. REFERENCE ELEVATION (0.00) = FINISH FLOOR ELEVATION.
2. (–1.33') INDICATES MINIMUM TOP OF FOOTING ELEVATION RELATIVE TO FINISH FLOOR ELEVATION.
3. THICKNESS OF FOOTINGS, SHOWN AS MINIMUM ON FOUNDATION SECTIONS, SHALL BE MAINTAINED AT ALL SLOPED AND DEPRESSED AREAS. SEE 5/S–1.2
4. FOR DIMENSIONS NOT SHOWN SEE THE ARCHITECTURAL DRAWINGS.
5. BOTTOM OF FOOTING SHALL BE MIN 1'–0" BELOW THE LOWER OF THE REFERENCE ELEVATION OR LOWEST ADJACENT FINISHED GRADE, U.O.N.
6. FOR WATERPROOFING REQUIREMENTS AND DETAILS SEE ARCHITECTURAL DRAWINGS.
7. IMPORTANT NOTE: CONTRACTOR SHALL LOCATE ANY EXISTING LINES AND PIPES BELOW THE FOUNADTION OF THE STRUCTURE. DO NOT DAMAGE EXISTING LINES OR PIPES.
8. FOR TYPICAL CONT CONC BOND BEAM DETAIL, SEE 6/S–1.3

SLAB ON GRADE NOTES:

1. THICKNESSES OF SLAB–ON–GRADE SHOWN ARE MINIMUM AND SHALL BE MAINTAINED AT ALL SLOPED, RAISED, AND DEPRESSED AREAS. SEE 1/S–1.2 FOR TYPICAL SLAB–ON–GRADE DETAILS.
2. FOR FLOOR ELEVATIONS, DEPRESSED SLAB LOCATIONS & SLOPES TO DRAIN, SEE ARCHITECTURAL DRAWINGS.
3. SLAB SHALL BE POURED WITH A MINIMUM SEVEN (7) DAYS LAPSE TIME BETWEEN ADJACENT POURS.

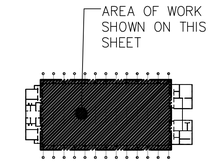

KEY PLAN
NOT TO SCALE

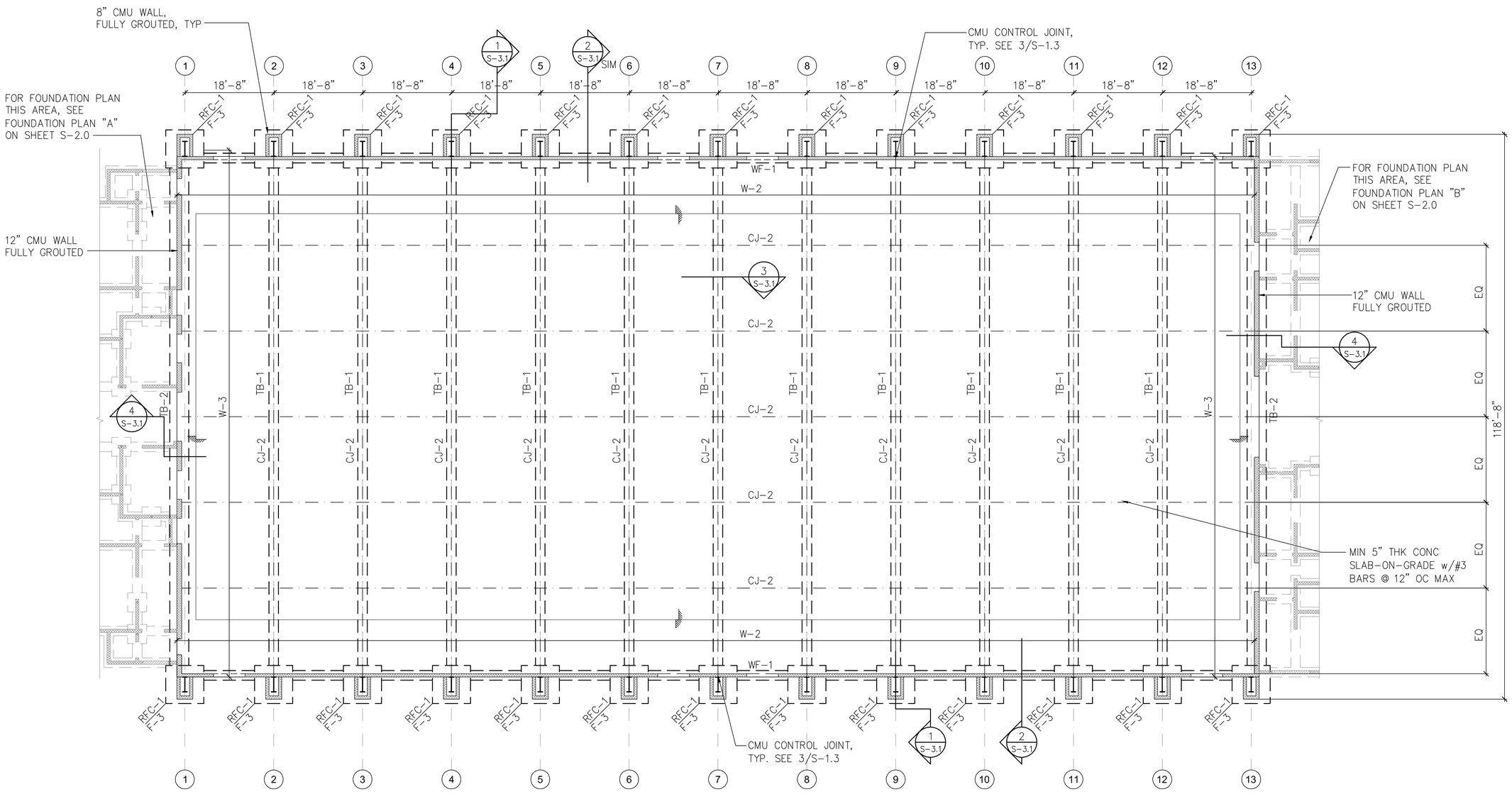

FOUNDATION PLAN – "C"
SCALE: 3/32" = 1'–0"

IWAMOTO & ASSOCIATES, LLC
STRUCTURAL ENGINEERS
98–029 HOKAHA STREET, SUITE J7
AIEA, HAWAII 96701
PH: (808) 486–5202
FAX: (808)486–5206
email: mail@iwamotollc.com

SOUTH MAUI COMMUNITY PARK RECREATION CENTER
LILOA DRIVE, KIHEI, HAWAII
TMK: (2)–2–2–24:3

NO.	REVISION	DATE

RON E. IWAMOTO
LICENSED PROFESSIONAL ENGINEER
No. 8871–S
HAWAII, U.S.A.

Expiration date of License: 4/30/18

THIS WORK WAS PREPARED BY ME OR UNDER MY SUPERVISION AND CONSTRUCTION OF THIS PROJECT WILL BE UNDER MY OBSERVATION

FOUNDATION PLAN - "C"

PROJECT NO.	1314
CHECKED BY:	RI
DRAWN BY:	IB
DATE:	11/01/16
SCALE:	AS SHOWN
SHT NO.: ___OF___	S-3.0

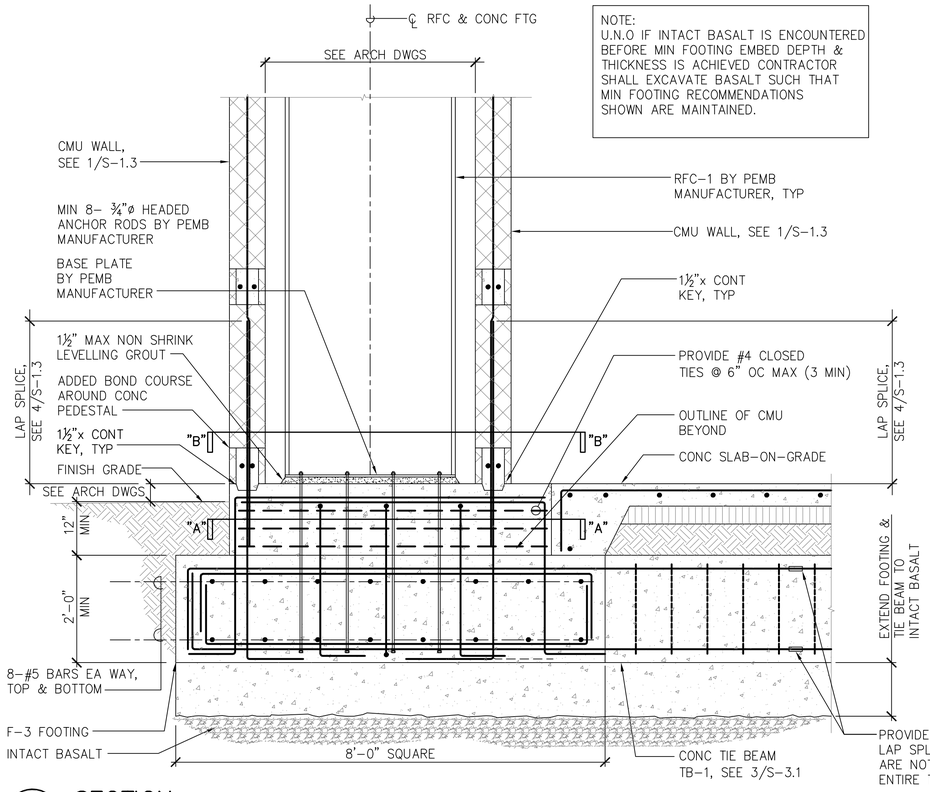

NOTE:
U.N.O IF INTACT BASALT IS ENCOUNTERED BEFORE MIN FOOTING EMBED DEPTH & THICKNESS IS ACHIEVED CONTRACTOR SHALL EXCAVATE BASALT SUCH THAT MIN FOOTING RECOMMENDATIONS SHOWN ARE MAINTAINED.

1 S-3.1 SECTION
SCALE: 3/4"=1'-0"

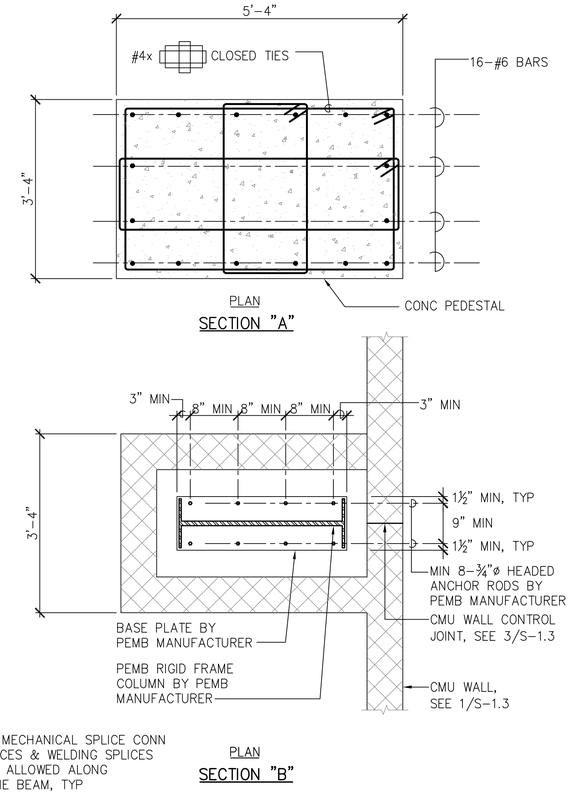

NOTE:
U.N.O IF INTACT BASALT IS ENCOUNTERED BEFORE MIN FOOTING EMBED DEPTH & THICKNESS IS ACHIEVED CONTRACTOR SHALL EXCAVATE BASALT SUCH THAT MIN FOOTING RECOMMENDATIONS SHOWN ARE MAINTAINED.

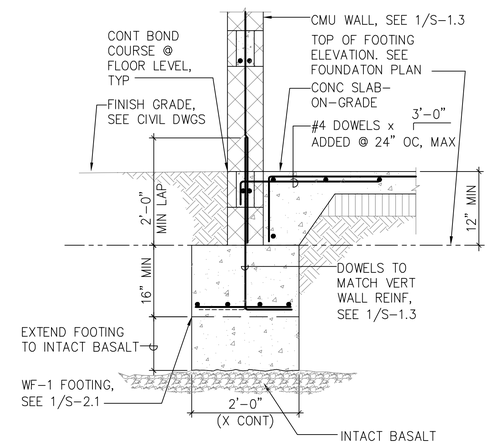

2 S-3.1 SECTION
SCALE: 3/4"=1'-0"

NOTE:
U.N.O IF INTACT BASALT IS ENCOUNTERED BEFORE MIN FOOTING EMBED DEPTH & THICKNESS IS ACHIEVED CONTRACTOR SHALL EXCAVATE BASALT SUCH THAT MIN FOOTING RECOMMENDATIONS SHOWN ARE MAINTAINED.

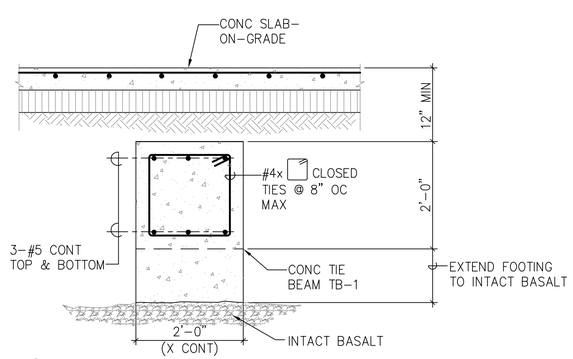

3 S-3.1 SECTION
SCALE: 3/4"=1'-0"

NOTE:
U.N.O IF INTACT BASALT IS ENCOUNTERED BEFORE MIN FOOTING EMBED DEPTH & THICKNESS IS ACHIEVED CONTRACTOR SHALL EXCAVATE BASALT SUCH THAT MIN FOOTING RECOMMENDATIONS SHOWN ARE MAINTAINED.

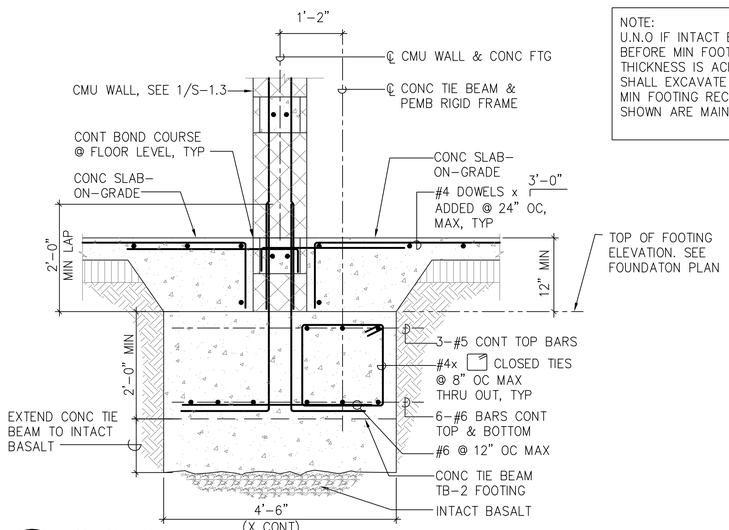

4 S-3.1 SECTION
SCALE: 3/4"=1'-0"

IWAMOTO & ASSOCIATES, LLC
STRUCTURAL ENGINEERS
98-029 HOKAHA STREET, SUITE 37
AIEA, HAWAII 96701
PH: (808) 486-5202
FAX: (808)486-5206
email: mail@iwamotollc.com

SOUTH MAUI COMMUNITY PARK RECREATION CENTER
LILOA DRIVE, KIHEI, HAWAII
TMK: (2)-2-2-24:3

NO.	REVISION	DATE

RON E. IWAMOTO
LICENSED PROFESSIONAL ENGINEER
No. 8871-S
HAWAII, U.S.A.

Expiration date of License: 4/30/18

THIS WORK WAS PREPARED BY ME OR UNDER MY SUPERVISION AND CONSTRUCTION OF THIS PROJECT WILL BE UNDER MY OBSERVATION

SECTIONS

PROJECT NO.	1314
CHECKED BY:	RI
DRAWN BY:	IB
DATE:	11/01/16
SCALE:	AS SHOWN
SHT NO.: ___OF___	S-3.1

LEGEND:

- INDICATES CMU OR CONC WALL BELOW.
- INDICATES OPENING IN METAL ROOF DECK, SEE ARCH DWGS
- BF-1 INDICATES BRACED FRAME TYPE. SEE BRACED FRAME ELEVATIONS ON SHEET S-8.0
- INDICATES BEAM OR HEADER BELOW

NOTES:

1. FOR METAL ROOF DECK SCHEDULE SEE 1/S-1.4. FOR METAL DECK ATTACHMENT TO FRAMING, SEE 2/S-1.4
2. FOR ADDED REINFORCING AROUND METAL DECK OPENINGS NOT SHOWN ON DWGS, SEE 3/S-1.4
3. SEE SECTIONS FOR ADDITIONAL STRUCTURAL STEEL SIZES NOT SHOWN ON PLAN.

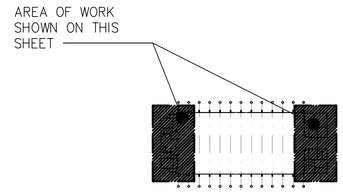

KEY PLAN
NOT TO SCALE

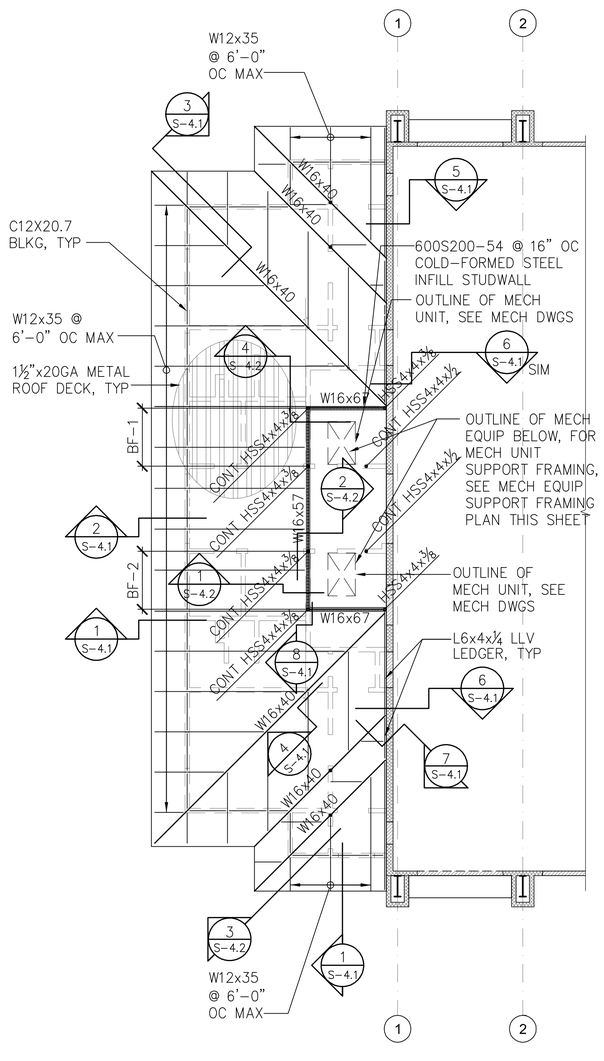

ROOF "A" – LOW ROOF FRAMING PLAN
SCALE: 3/32"= 1'-0"

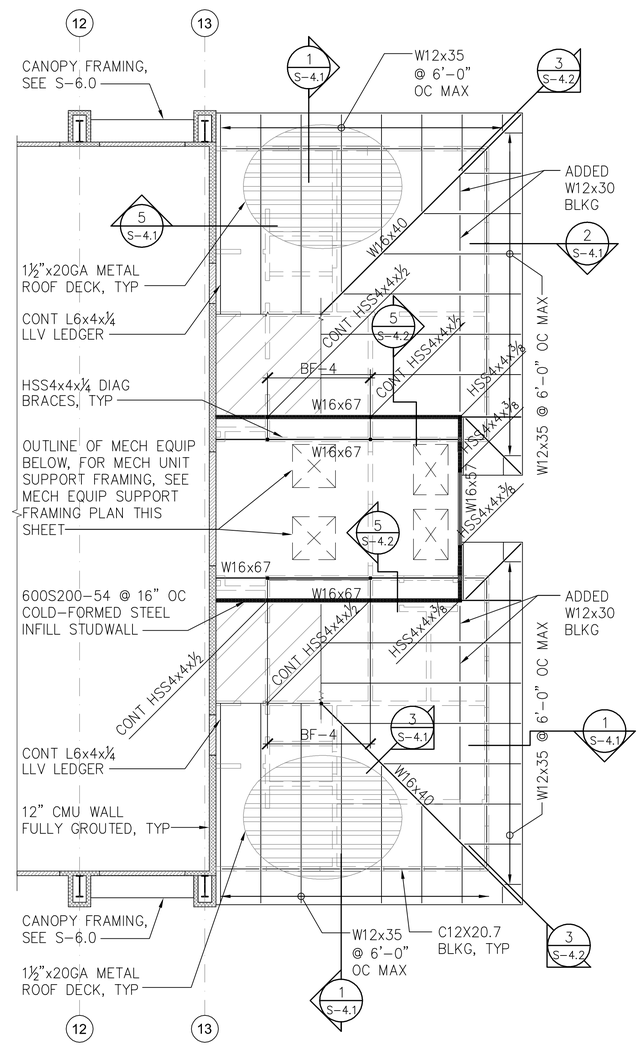

ROOF "B" – LOW ROOF FRAMING PLAN
SCALE: 3/32"= 1'-0"

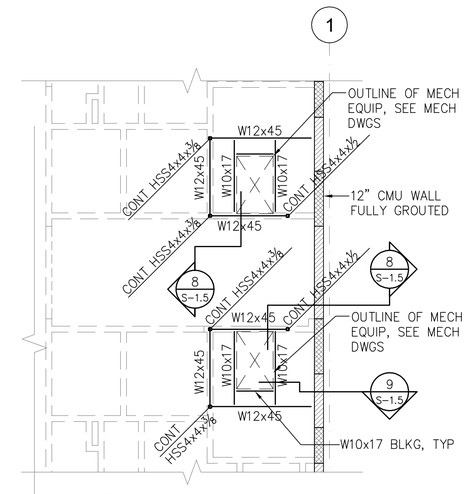

ROOF "A" – MECHANICAL EQUIP SUPPORT FRAMING PLAN
SCALE: 1/8"= 1'-0"

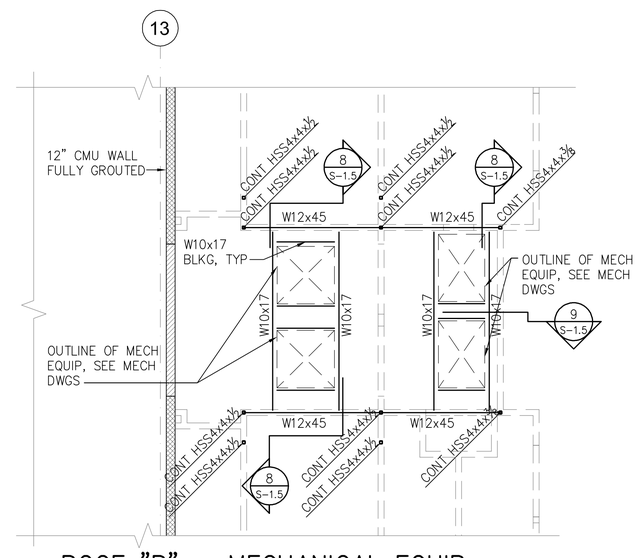

ROOF "B" – MECHANICAL EQUIP SUPPORT FRAMING PLAN
SCALE: 1/8"= 1'-0"

IWAMOTO & ASSOCIATES, LLC
STRUCTURAL ENGINEERS
98-029 HOAHA STREET, SUITE 37
AIEA, HAWAII 96701
PH: (808) 486-5202
FAX: (808)486-5206
email: mail@iwamotollc.com

SOUTH MAUI COMMUNITY PARK RECREATION CENTER
LILOA DRIVE, KIHEI, HAWAII
TMK: (2)-2-2-24:3

NO.	REVISION	DATE

RON E. IWAMOTO
LICENSED PROFESSIONAL ENGINEER
No. 8871-S
HAWAII, U.S.A.

Expiration date of License: 4/30/18

THIS WORK WAS PREPARED BY ME OR UNDER MY SUPERVISION AND CONSTRUCTION OF THIS PROJECT WILL BE UNDER MY OBSERVATION

ROOF "A" - LOW ROOF FRAMING PLAN, ROOF "B" - LOW ROOF FRAMING PLAN, ROOF "A" - MECHANICAL EQUIP SUPPORT FRAMING PLAN & ROOF "B" - MECHANICAL EQUIP SUPPORT FRAMING PLAN

PROJECT NO.	1314
CHECKED BY:	RI
DRAWN BY:	IB
DATE:	11/01/16
SCALE:	AS SHOWN
SHT NO.: ___OF___	S-4.0

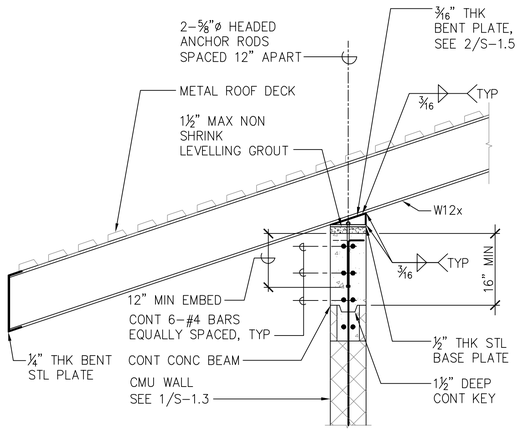

1 S-4.1 SECTION
SCALE: 3/4"=1'-0"

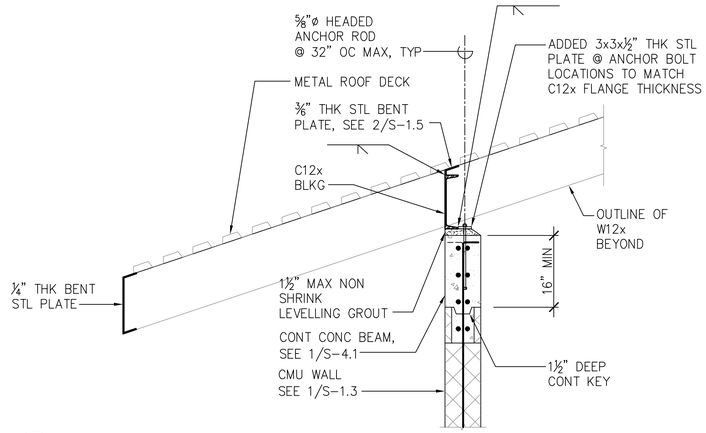

2 S-4.1 SECTION
SCALE: 3/4"=1'-0"

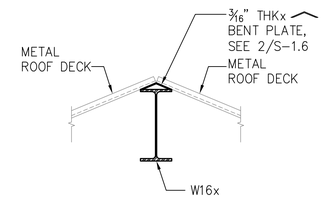

3 S-4.1 SECTION
SCALE: 3/4"=1'-0"

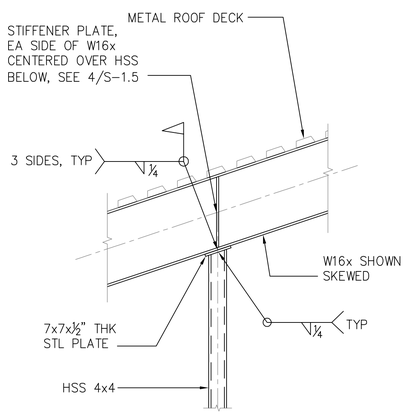

4 S-4.1 SECTION
SCALE: 3/4"=1'-0"

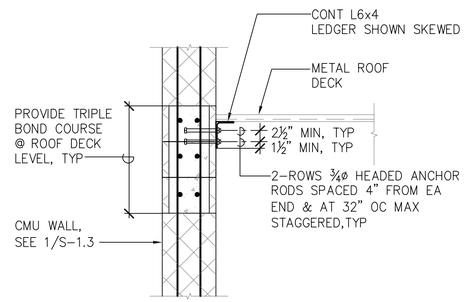

5 S-4.1 SECTION
SCALE: 3/4"=1'-0"

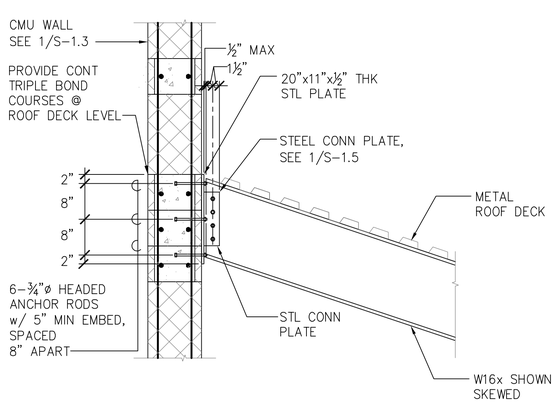

6 S-4.1 SECTION
SCALE: 3/4"=1'-0"

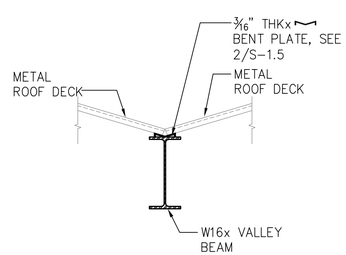

7 S-4.1 SECTION
SCALE: 3/4"=1'-0"

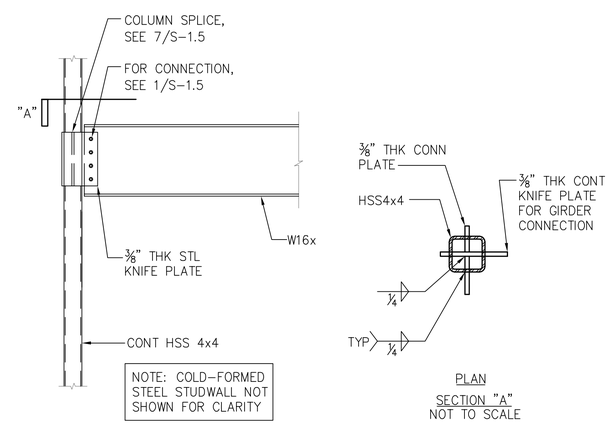

8 S-4.1 SECTION
SCALE: 3/4"=1'-0"

IWAMOTO & ASSOCIATES, LLC
STRUCTURAL ENGINEERS
98-029 HOKAHA STREET, SUITE J7
AIEA, HAWAII 96701
PH: (808) 486-5202
FAX: (808)486-5206
email: mail@iwamotollc.com

SOUTH MAUI COMMUNITY PARK RECREATION CENTER
LILOA DRIVE, KIHEI, HAWAII
TMK: (2)-2-2-24:3

NO.	REVISION	DATE

RON E. IWAMOTO
LICENSED PROFESSIONAL ENGINEER
No. 8871-S
HAWAII, U.S.A.

Expiration date of License: 4/30/18

THIS WORK WAS PREPARED BY ME OR UNDER MY SUPERVISION AND CONSTRUCTION OF THIS PROJECT WILL BE UNDER MY OBSERVATION

SECTIONS

PROJECT NO.	1314
CHECKED BY:	RI
DRAWN BY:	IB
DATE:	11/01/16
SCALE:	AS SHOWN
SHT NO.: ___OF___	S-4.1

DRAWING

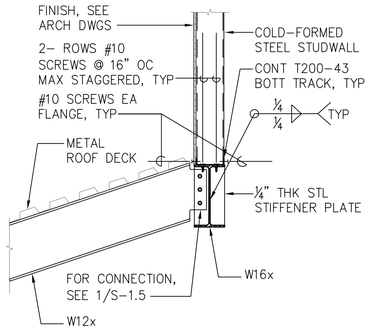

1 S–4.2 SECTION
SCALE: 3/4"=1'–0"

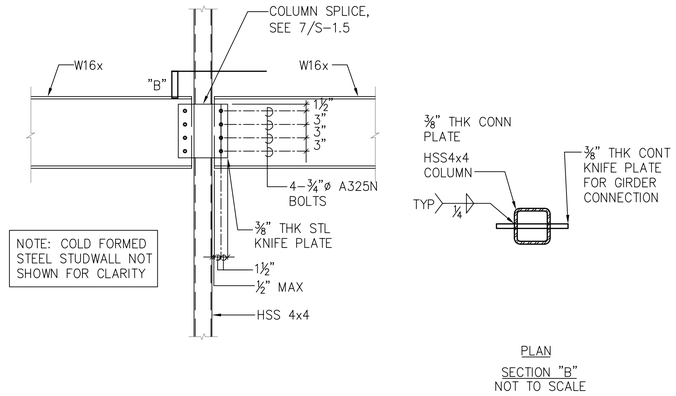

2 S–4.2 SECTION
SCALE: 3/4"=1'–0"

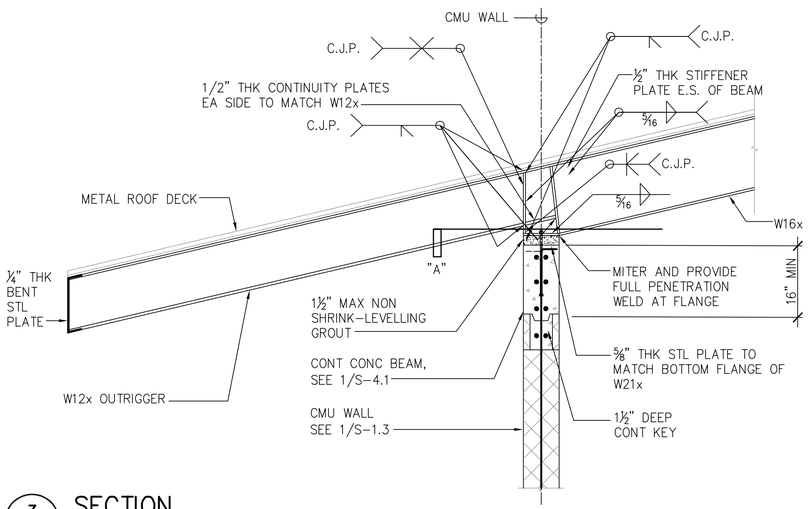

3 S–4.2 SECTION
SCALE: 3/4"=1'–0"

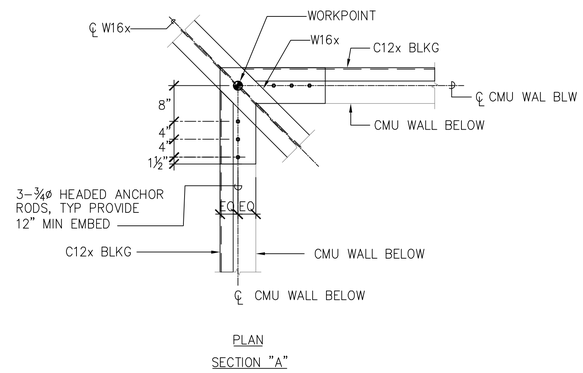

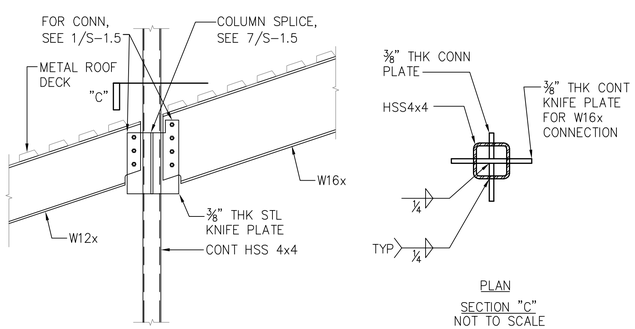

4 S–4.2 SECTION
SCALE: 3/4"=1'–0"

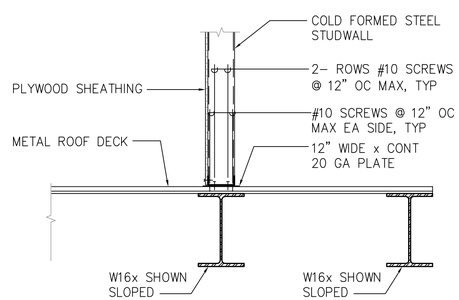

5 S–4.2 SECTION
SCALE: 3/4"=1'–0"

IWAMOTO & ASSOCIATES, LLC
STRUCTURAL ENGINEERS
98–029 HOKAHA STREET, SUITE 37
AIEA, HAWAII 96701
PH: (808) 486–5202
FAX: (808)486–5206
email: mail@iwamotollc.com

SOUTH MAUI COMMUNITY PARK RECREATION CENTER
LILOA DRIVE, KIHEI, HAWAII
TMK: (2)–2–2–24:3

NO.	REVISION	DATE

RON E. IWAMOTO
LICENSED PROFESSIONAL ENGINEER
No. 8871–S
HAWAII, U.S.A.

Expiration date of License: 4/30/18

THIS WORK WAS PREPARED BY ME OR UNDER MY SUPERVISION AND CONSTRUCTION OF THIS PROJECT WILL BE UNDER MY OBSERVATION

SECTIONS

PROJECT NO.	1314
CHECKED BY:	RI
DRAWN BY:	IB
DATE:	11/01/16
SCALE:	AS SHOWN
SHT NO.: ___OF___	S-4.2

DRAWING

LEGEND:

- INDICATES CMU OR CONC WALL BELOW.
- INDICATES OPENING IN METAL ROOF DECK, SEE ARCH DWGS
- BF-1 INDICATES BRACED FRAME TYPE. SEE BRACED FRAME ELEVATIONS ON SHEET S-8.0
- INDICATES BEAM OR HEADER BELOW

NOTES:

1. FOR METAL ROOF DECK SCHEDULE SEE 1/S-1.4. FOR METAL DECK ATTACHMENT TO FRAMING, SEE 2/S-1.4
2. FOR ADDED REINFORCING AROUND METAL DECK OPENINGS NOT SHOWN ON DWGS, SEE 3/S-1.4
3. SEE SECTIONS FOR ADDITIONAL STRUCTURAL STEEL SIZES NOT SHOWN ON PLAN.

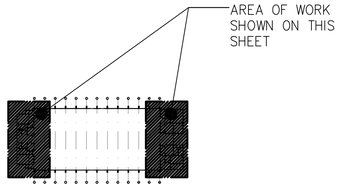

KEY PLAN
NOT TO SCALE

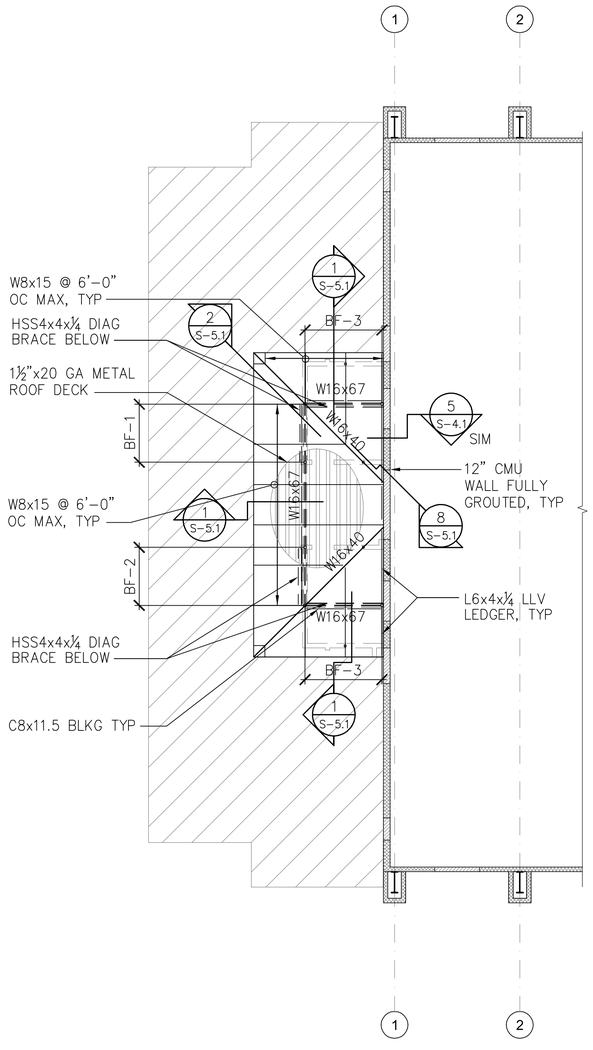

ROOF "A" – HIGH ROOF FRAMING PLAN
SCALE: 3/32"= 1'-0"

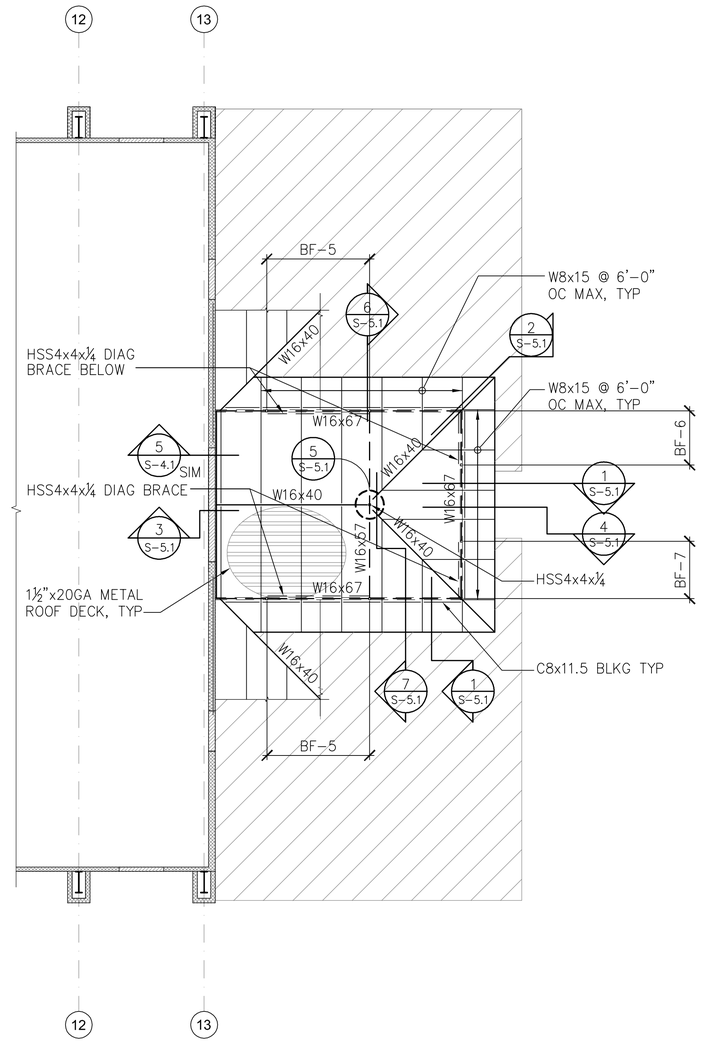

ROOF "B" – HIGH ROOF FRAMING PLAN
SCALE: 3/32"= 1'-0"

IWAMOTO & ASSOCIATES, LLC
STRUCTURAL ENGINEERS
98-029 HOKAHA STREET, SUITE 37
AIEA, HAWAII 96701
PH: (808) 486-5202
FAX: (808)486-5206
email: mail@iwamotollc.com

SOUTH MAUI COMMUNITY PARK RECREATION CENTER
LILOA DRIVE, KIHEI, HAWAII
TMK: (2)-2-2-24:3

NO.	REVISION	DATE

RON E. IWAMOTO
LICENSED PROFESSIONAL ENGINEER
No. 8871-S
HAWAII, U.S.A.

Expiration date of License: 4/30/18

THIS WORK WAS PREPARED BY ME OR UNDER MY SUPERVISION AND CONSTRUCTION OF THIS PROJECT WILL BE UNDER MY OBSERVATION

ROOF "A" - HIGH ROOF FRAMING PLAN
ROOF "B" - HIGH ROOF FRAMING PLAN

PROJECT NO.	1314
CHECKED BY:	RI
DRAWN BY:	IB
DATE:	11/01/16
SCALE:	AS SHOWN
SHT NO.: ___OF___	S-5.0

DRAWING

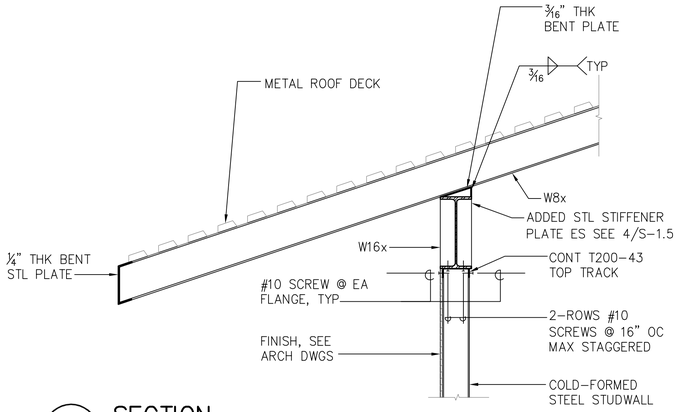

1 S-5.1 SECTION
SCALE: 3/4"=1'-0"

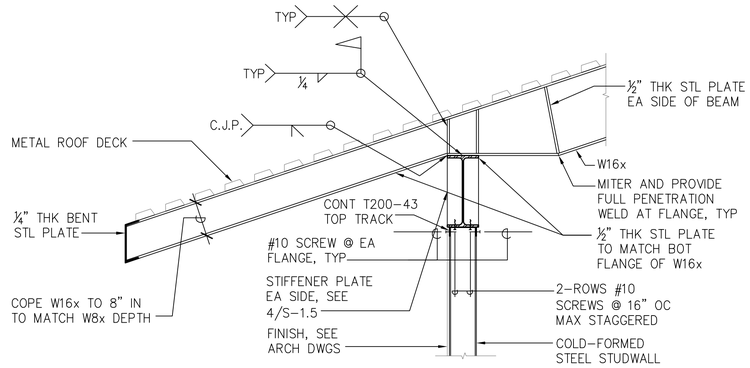

2 S-5.1 SECTION
SCALE: 3/4"=1'-0"

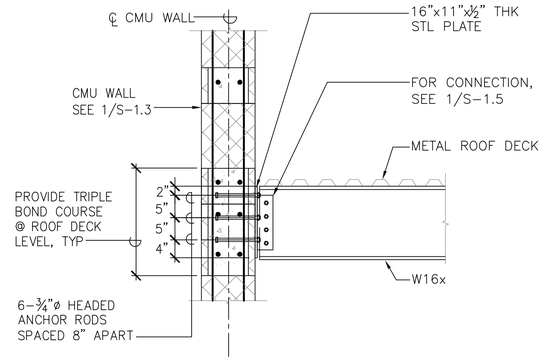

3 S-5.1 SECTION
SCALE: 3/4"=1'-0"

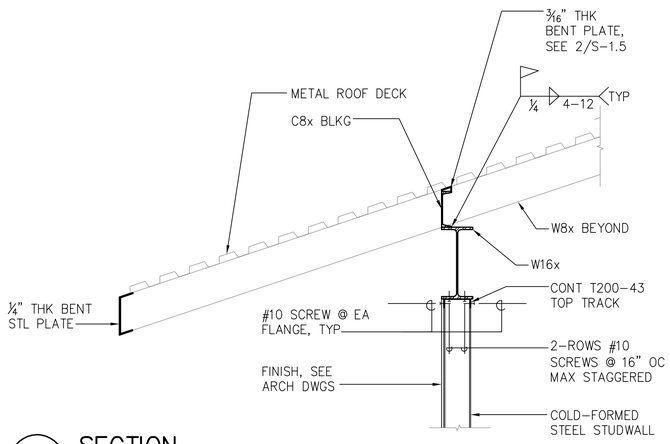

4 S-5.1 SECTION
SCALE: 3/4"=1'-0"

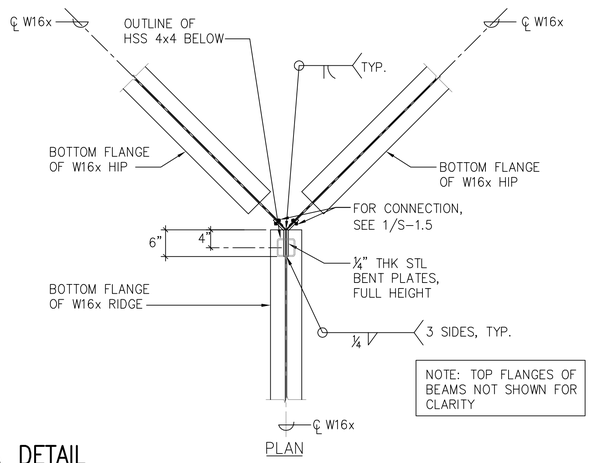

5 S-5.1 DETAIL
SCALE: 3/4"= 1'-0"

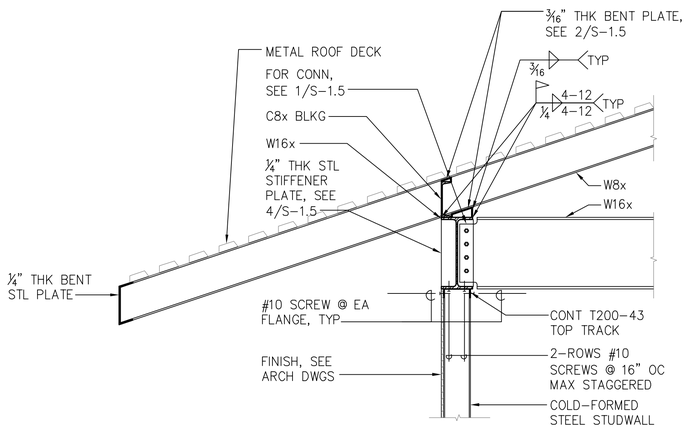

6 S-5.1 SECTION
SCALE: 3/4"=1'-0"

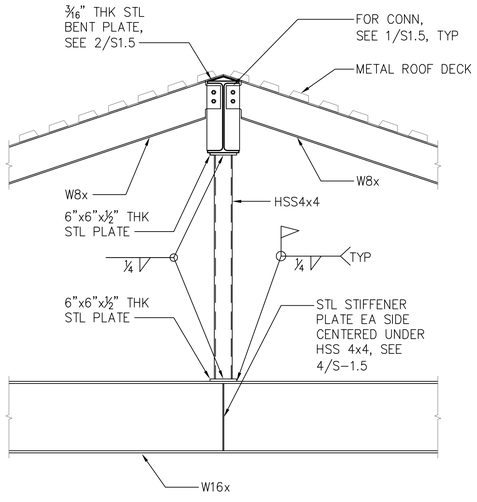

7 S-5.1 SECTION
SCALE: 3/4"=1'-0"

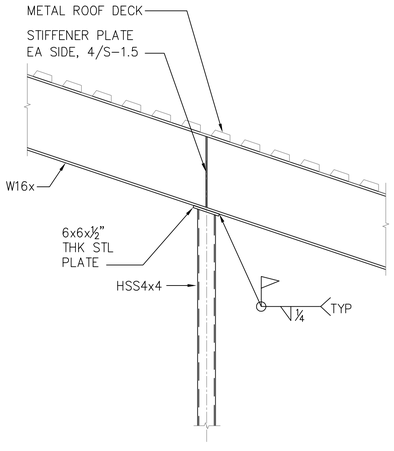

8 S-5.1 SECTION
SCALE: 3/4"=1'-0"

IWAMOTO
& ASSOCIATES, LLC
STRUCTURAL ENGINEERS
98-029 HOKAHA STREET, SUITE 37
AIEA, HAWAII 96701
PH: (808) 486-5202
FAX: (808)486-5206
email: mail@iwamotolic.com

SOUTH MAUI COMMUNITY PARK RECREATION CENTER

LILOA DRIVE, KIHEI, HAWAII

TMK: (2)-2-2-24:3

NO.	REVISION	DATE

RON E. IWAMOTO
LICENSED PROFESSIONAL ENGINEER
No. 8871-S
HAWAII, U.S.A.

Expiration date of License: 4/30/18

THIS WORK WAS PREPARED BY ME OR UNDER MY SUPERVISION AND CONSTRUCTION OF THIS PROJECT WILL BE UNDER MY OBSERVATION

SECTIONS

	PROJECT NO.	1314
	CHECKED BY:	RI
	DRAWN BY:	IB
DRAWING	DATE:	11/01/16
	SCALE:	AS SHOWN
	SHT NO.: ___OF___	S-5.1

LEGEND:

- INDICATES CMU WALL BELOW.
- INDICATES OPENING IN METAL ROOF DECK, SEE ARCH DWGS
- RFC-1 INDICATES RIGID FRAME COLUMN BY PEMB.
- INDICATES PARTIAL HEIGHT CMU WALL
- INDICATES FULL HEIGHT CMU WALL
- INDICATES BEAM OR HEADER BELOW
- PEMB INDICATES PRE-ENGINEERED METAL BUILDING

NOTES:

1. FOR METAL ROOF DECK SCHEDULE SEE 1/S-1.4. FOR METAL DECK ATTACHMENT TO FRAMING, SEE 2/S-1.4
2. FOR ADDED REINFORCING AROUND METAL DECK OPENINGS NOT SHOWN ON DWGS, SEE 3/S-1.4
3. SEE SECTIONS FOR ADDITIONAL STRUCTURAL STEEL SIZES NOT SHOWN ON PLAN.

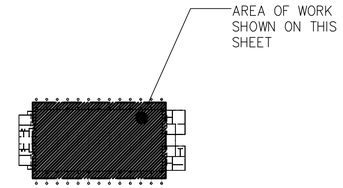

KEY PLAN
NOT TO SCALE

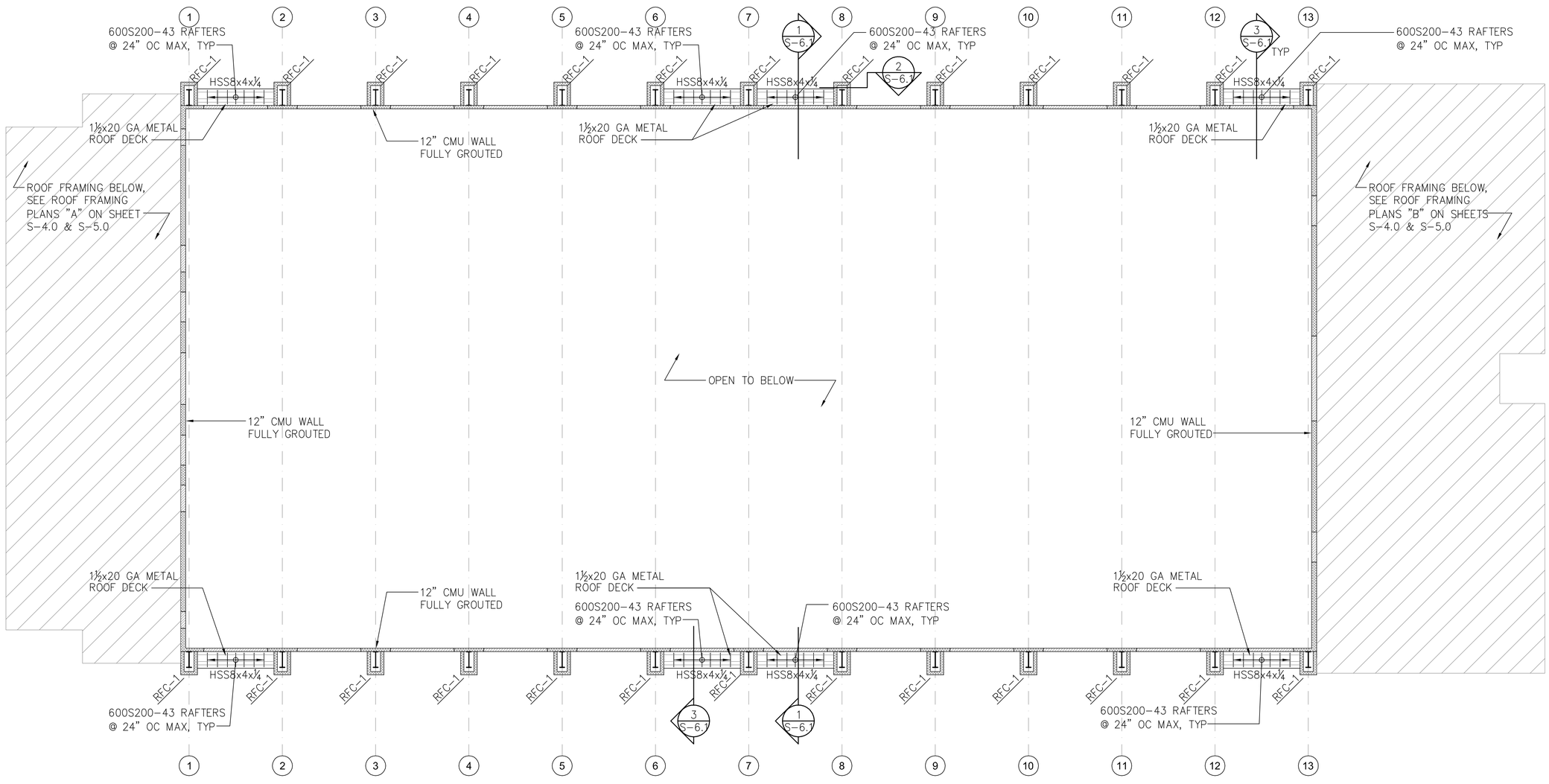

ROOF "C" – LOW ROOF FRAMING PLAN
SCALE: 3/32"= 1'-0"

IWAMOTO & ASSOCIATES, LLC
STRUCTURAL ENGINEERS
98-029 HOKAHA STREET, SUITE 37
AIEA, HAWAII 96701
PH: (808) 486-5202
FAX: (808)486-5206
email: mail@iwamotollc.com

SOUTH MAUI COMMUNITY PARK RECREATION CENTER
LILOA DRIVE, KIHEI, HAWAII
TMK: (2)-2-2-24:3

NO.	REVISION	DATE

RON E. IWAMOTO
LICENSED PROFESSIONAL ENGINEER
No. 8871-S
HAWAII, U.S.A.

Expiration date of License: 4/30/18

THIS WORK WAS PREPARED BY ME OR UNDER MY SUPERVISION AND CONSTRUCTION OF THIS PROJECT WILL BE UNDER MY OBSERVATION

ROOF "C" - LOW ROOF FRAMING PLAN

PROJECT NO.	1314
CHECKED BY:	RI
DRAWN BY:	IB
DATE:	11/01/16
SCALE:	AS SHOWN
SHT NO.: ___OF___	S-6.0

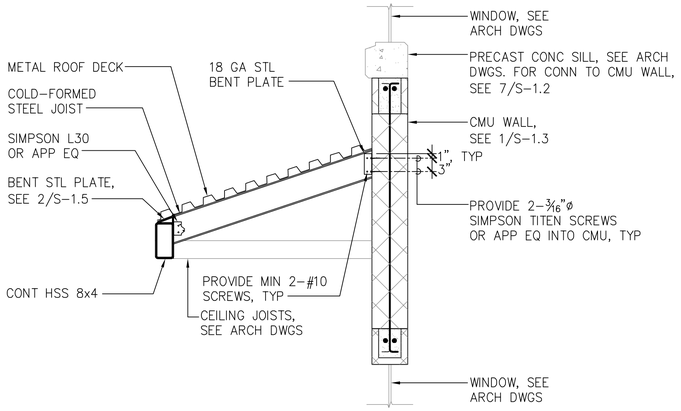

1 S-6.1 SECTION
SCALE: 3/4"=1'-0"

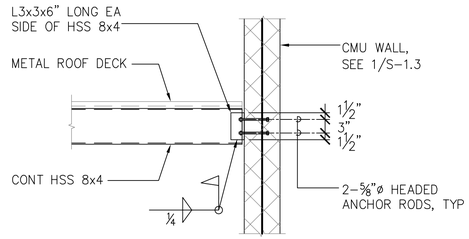

2 S-6.1 SECTION
SCALE: 3/4"=1'-0"

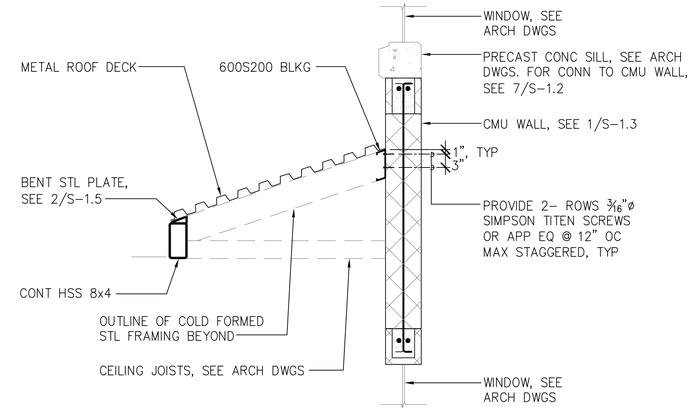

3 S-6.1 SECTION
SCALE: 3/4"=1'-0"

IWAMOTO & ASSOCIATES, LLC
STRUCTURAL ENGINEERS
98-029 HOAAHA STREET, SUITE 37
AIEA, HAWAII 96701
PH: (808) 486-5202
FAX: (808)486-5206
email: mail@iwamotollc.com

SOUTH MAUI COMMUNITY PARK RECREATION CENTER
LILOA DRIVE, KIHEI, HAWAII
TMK: (2)-2-2-24:3

NO.	REVISION	DATE

RON E. IWAMOTO
LICENSED PROFESSIONAL ENGINEER
No. 8871-S
HAWAII, U.S.A.

Expiration date of License: 4/30/18

THIS WORK WAS PREPARED BY ME OR UNDER MY SUPERVISION AND CONSTRUCTION OF THIS PROJECT WILL BE UNDER MY OBSERVATION

SECTIONS

DRAWING

PROJECT NO.	1314
CHECKED BY:	RI
DRAWN BY:	IB
DATE:	11/01/16
SCALE:	AS SHOWN
SHT NO.: ___OF___	S-6.1

NOTES:

1. SEE SECTIONS FOR ADDITIONAL STRUCTURAL STEEL SIZES NOT SHOWN ON PLAN.
2. FOR CONNECTION DETAILS, SEE PRE-ENGINEERED METAL BUILDING DRAWINGS.
3. PEMB MANUFACTURER SHALL DESIGN AND FURNISH ALL REQ'D BLOCKING/ BRIDGING FOR ROOF PURLINS
4. FOR ADDED ROOF LOADS, SEE GENERAL NOTES.
5. FOR LATERAL LOAD APPLIED TO HIGH ROOF, SEE HIGH ROOF LATERAL LOAD DIAGRAM THIS SHEET.

LEGEND:

	INDICATES CMU WALLS BELOW
RFB-1	INDICATES RIGID FRAME BEAM TYPE.
PEMB	INDICATES PRE-ENGINEERED METAL BUILDING

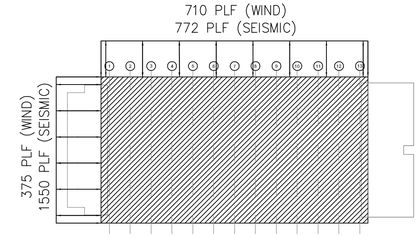

HIGH ROOF LATERAL LOAD DIAGRAM
NOT TO SCALE

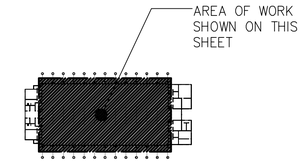

KEY PLAN
NOT TO SCALE

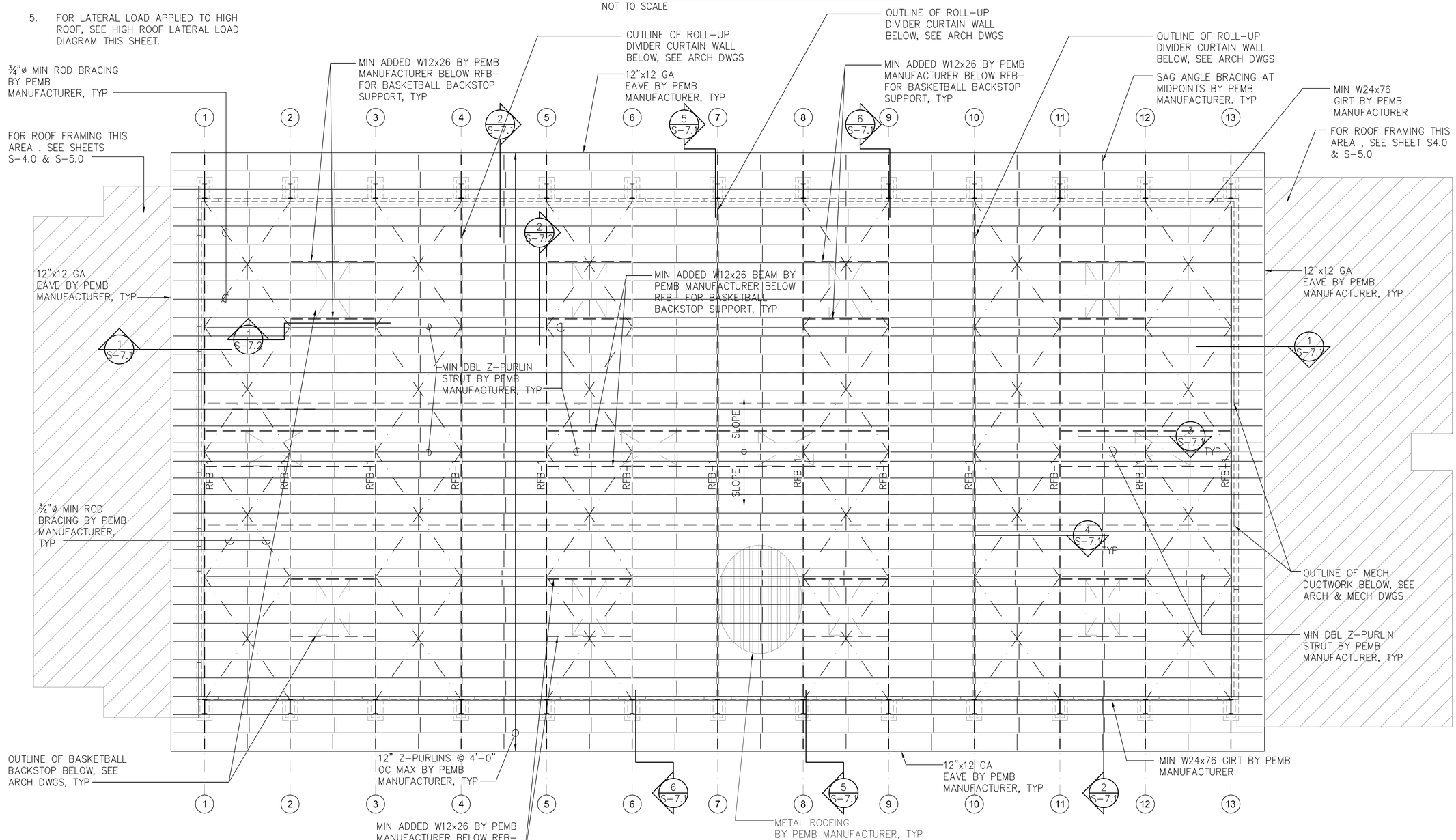

ROOF "C" – HIGH ROOF FRAMING PLAN
SCALE: 3/32"= 1'-0"

IWAMOTO & ASSOCIATES, LLC
STRUCTURAL ENGINEERS
98-029 HOKAHA STREET, SUITE 37
AIEA, HAWAII 96701
PH: (808) 486-5202
FAX: (808)486-5206
email: mail@iwamotollc.com

SOUTH MAUI COMMUNITY PARK RECREATION CENTER
LILOA DRIVE, KIHEI, HAWAII
TMK: (2)-2-2-24:3

NO.	REVISION	DATE

RON E. IWAMOTO
LICENSED PROFESSIONAL ENGINEER
No. 8871-S
HAWAII, U.S.A.

Expiration date of License: 4/30/18

THIS WORK WAS PREPARED BY ME OR UNDER MY SUPERVISION AND CONSTRUCTION OF THIS PROJECT WILL BE UNDER MY OBSERVATION

ROOF "C" - HIGH ROOF FRAMING PLAN

PROJECT NO.	1314
CHECKED BY:	RI
DRAWN BY:	IB
DATE:	11/01/16
SCALE:	AS SHOWN
SHT NO.: ___OF___	S-7.0

DRAWING

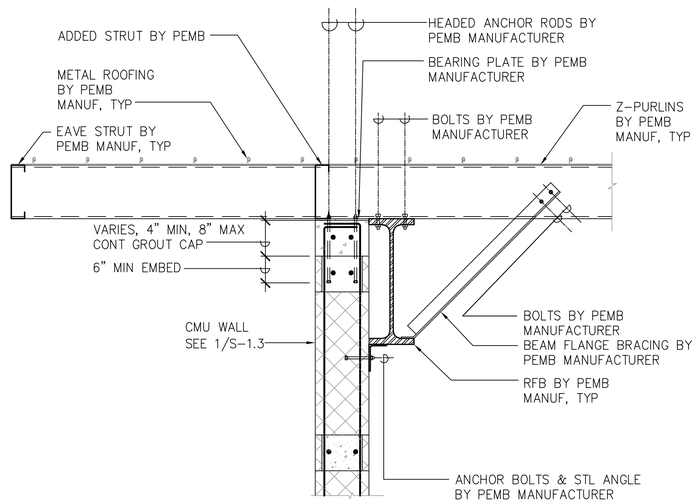

1 S-7.1 SECTION
SCALE: 3/4"=1'-0"

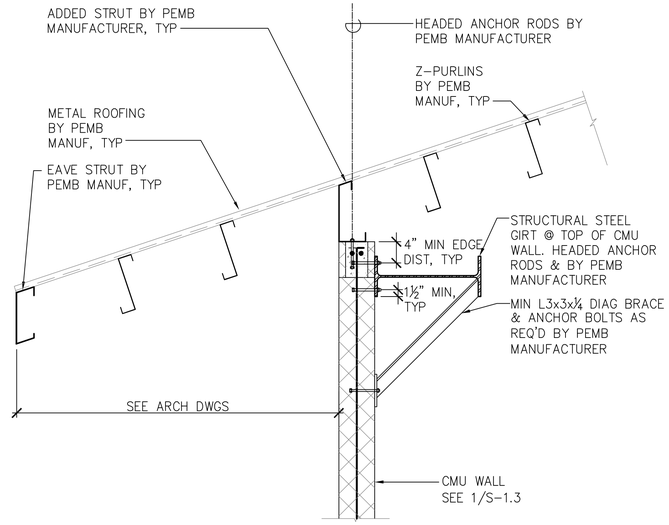

2 S-7.1 SECTION
SCALE: 3/4"=1'-0"

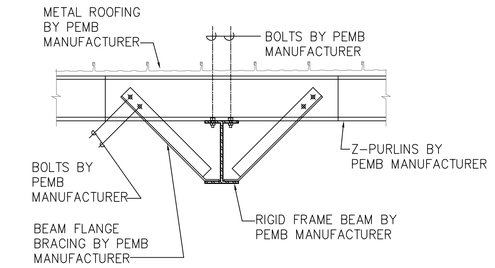

3 S-7.1 SECTION
SCALE: 3/4"=1'-0"

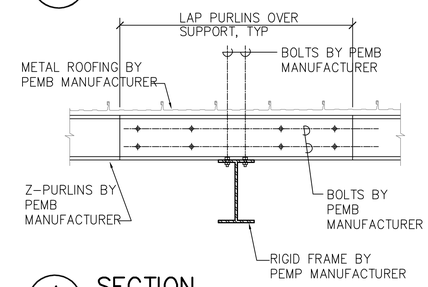

4 S-7.1 SECTION
SCALE: 3/4"=1'-0"

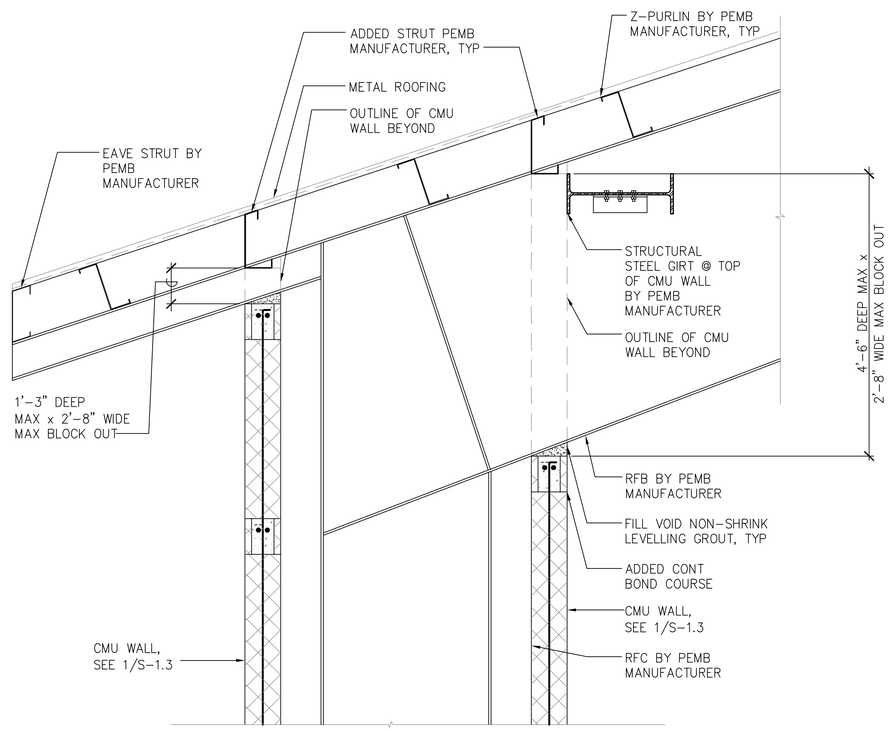

5 S-7.1 SECTION
SCALE: 3/4"=1'-0"

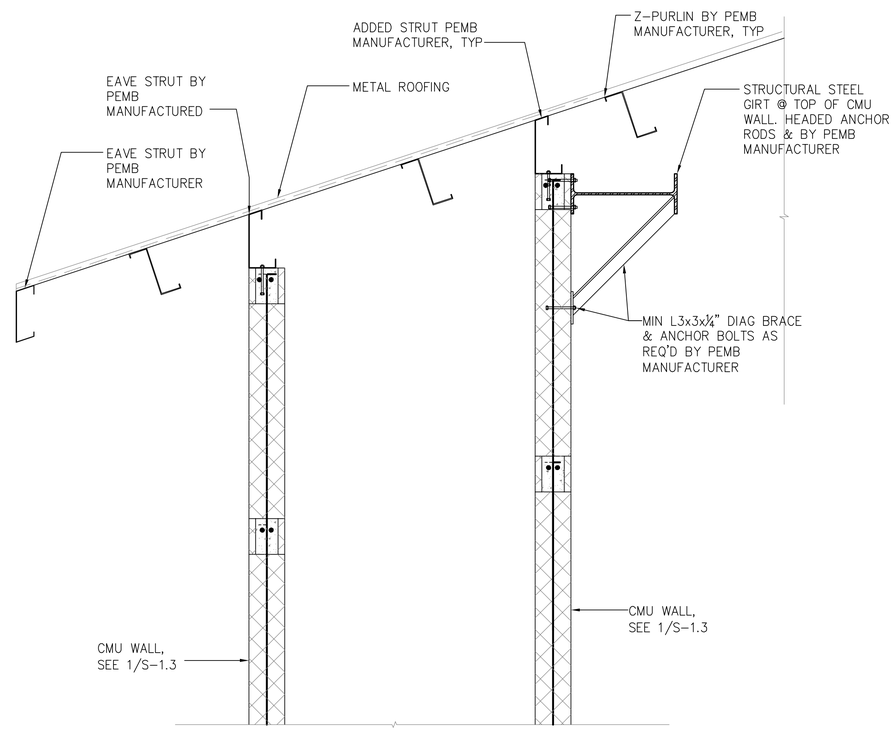

6 S-7.1 SECTION
SCALE: 3/4"=1'-0"

IWAMOTO & ASSOCIATES, LLC
STRUCTURAL ENGINEERS
98-029 HOKAHA STREET, SUITE 37
AIEA, HAWAII 96701
PH: (808) 486-5202
FAX: (808)486-5206
email: mail@iwamotollc.com

SOUTH MAUI COMMUNITY PARK RECREATION CENTER
LILOA DRIVE, KIHEI, HAWAII
TMK: (2)-2-2-24:3

NO.	REVISION	DATE

RON E. IWAMOTO
LICENSED PROFESSIONAL ENGINEER
No. 8871-S
HAWAII, U.S.A.

Ron E. Iwamoto

Expiration date of License: 4/30/18

THIS WORK WAS PREPARED BY ME OR UNDER MY SUPERVISION AND CONSTRUCTION OF THIS PROJECT WILL BE UNDER MY OBSERVATION

SECTIONS

PROJECT NO.	1314
CHECKED BY:	RI
DRAWN BY:	IB
DATE:	11/01/16
SCALE:	AS SHOWN
SHT NO.: ___OF___	S-7.1

DRAWING

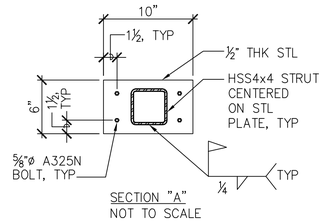

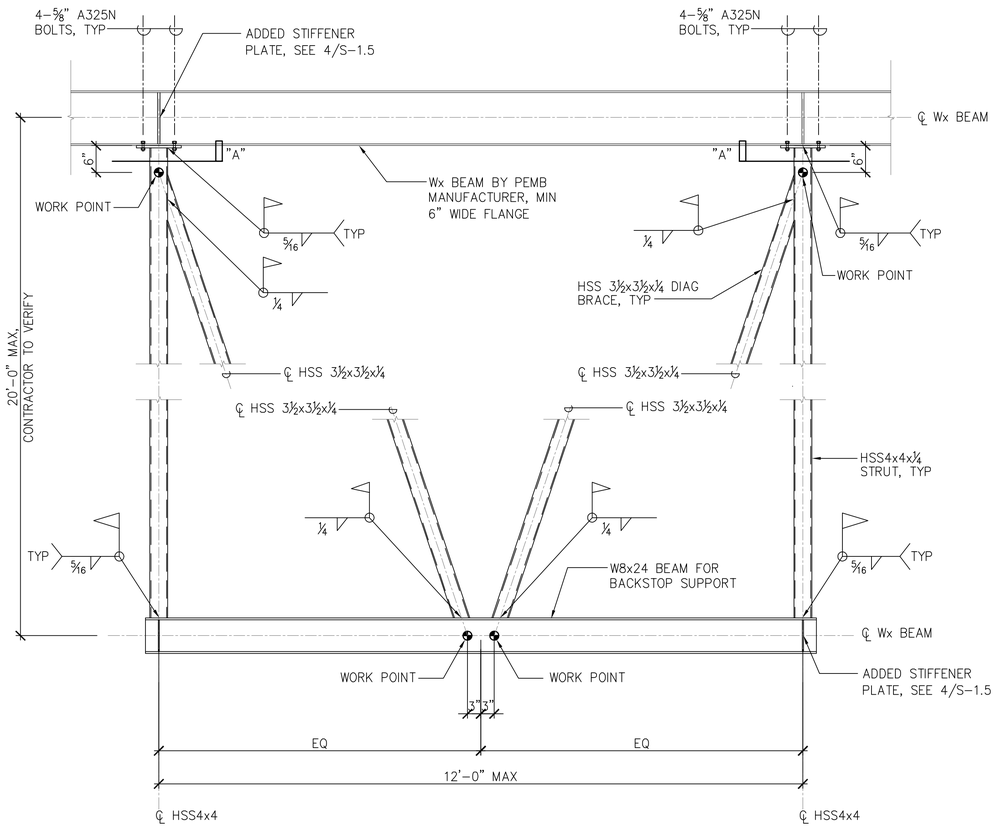

1 S-7.2 SECTION
SCALE: 3/4"=1'-0"

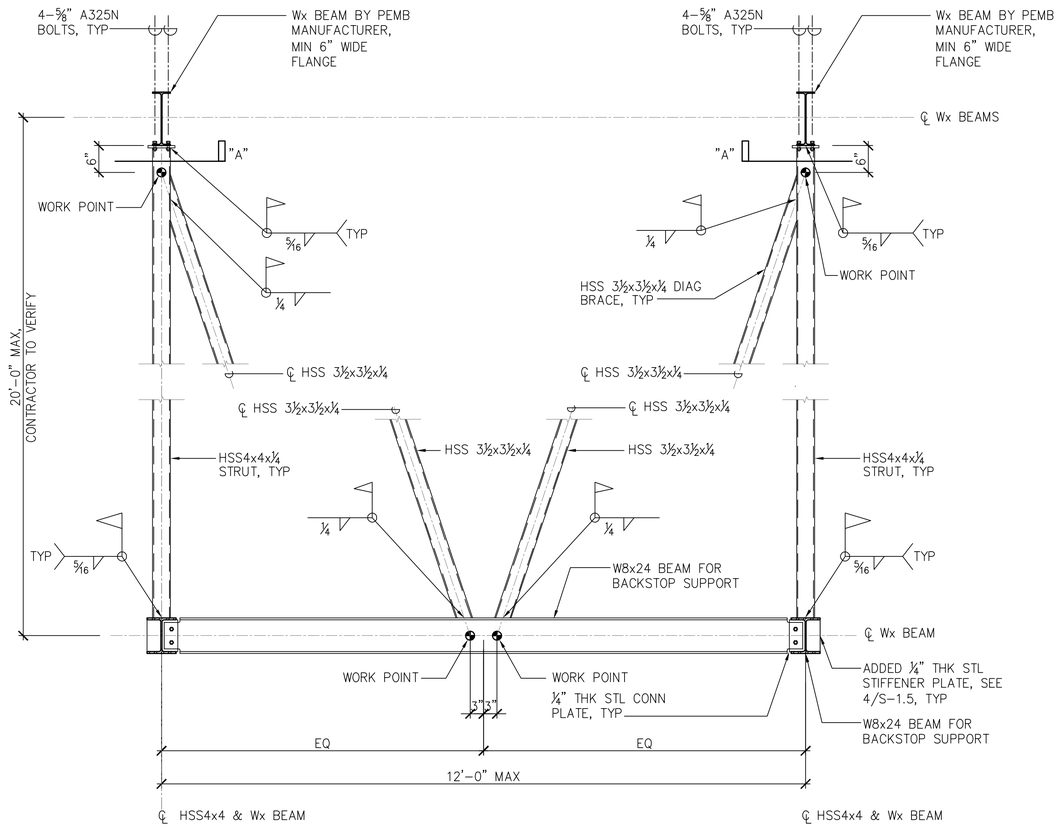

2 S-7.2 SECTION
SCALE: 3/4"=1'-0"

IWAMOTO & ASSOCIATES, LLC
STRUCTURAL ENGINEERS
98-029 HOKAHA STREET, SUITE 37
AIEA, HAWAII 96701
PH: (808) 486-5202
FAX: (808)486-5206
email: mail@iwamotollc.com

SOUTH MAUI COMMUNITY PARK RECREATION CENTER
LILOA DRIVE, KIHEI, HAWAII
TMK: (2)-2-2-24:3

NO.	REVISION	DATE

RON E. IWAMOTO
LICENSED PROFESSIONAL ENGINEER
No. 8871-S
HAWAII, U.S.A.

Expiration date of License: 4/30/18

THIS WORK WAS PREPARED BY ME OR UNDER MY SUPERVISION AND CONSTRUCTION OF THIS PROJECT WILL BE UNDER MY OBSERVATION

SECTIONS

PROJECT NO.	1314
CHECKED BY:	RI
DRAWN BY:	IB
DATE:	11/01/16
SCALE:	AS SHOWN
SHT NO.: ___OF___	S-7.2

DRAWING

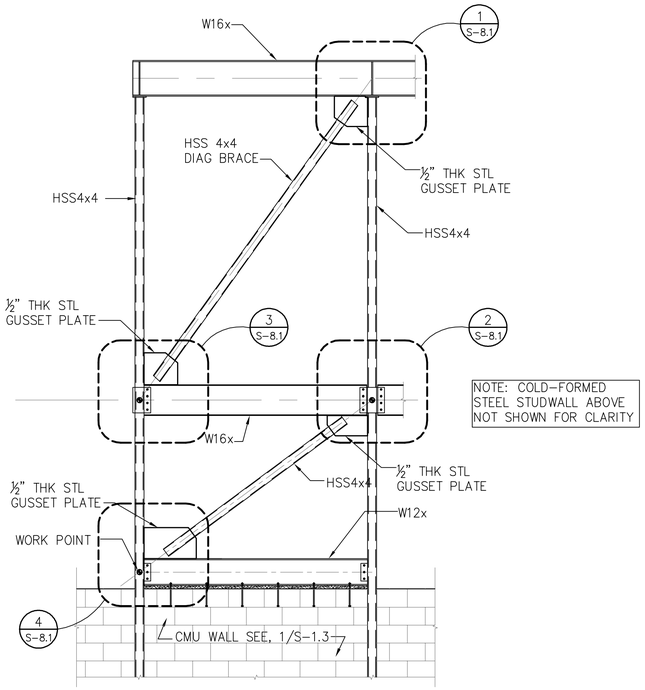

BRACED FRAME BF-1 ELEVATION (BF-2 SIM OPP DIR)

SCALE: 3/8"=1'-0"

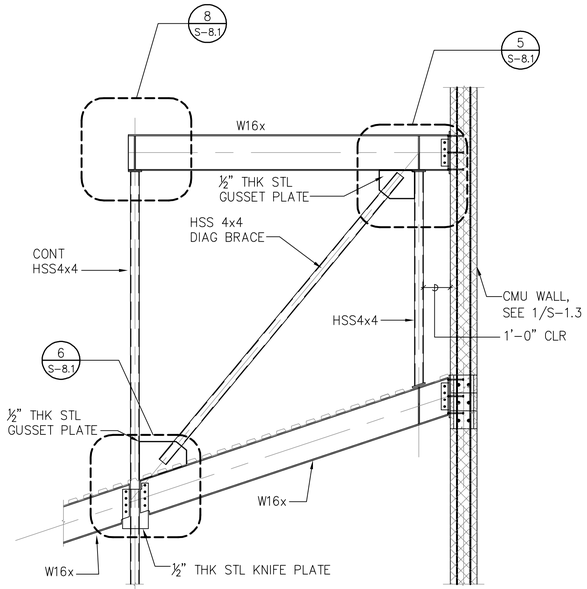

BRACED FRAME BF-3 ELEVATION

SCALE: 3/8"=1'-0"

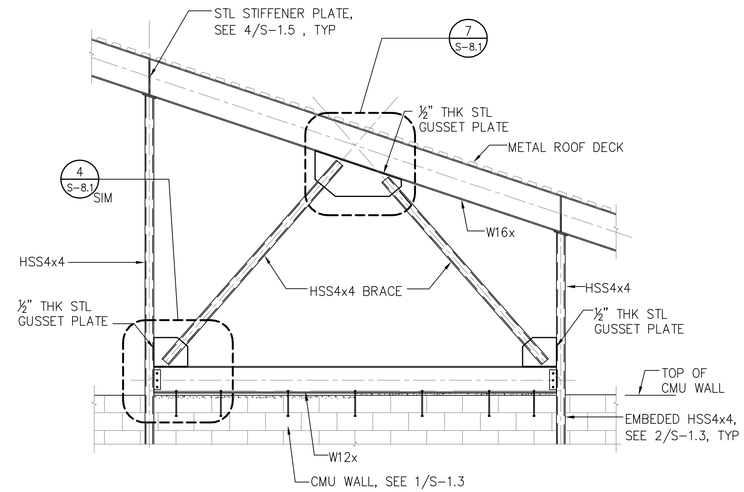

BRACED FRAME BF-4 ELEVATION

SCALE: 3/8"=1'-0"

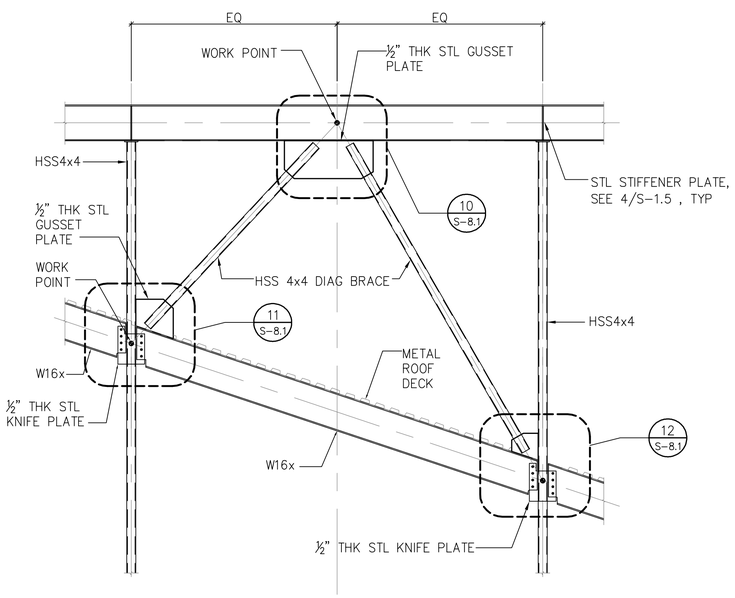

BRACED FRAME BF-5 ELEVATION

SCALE: 3/8"=1'-0"

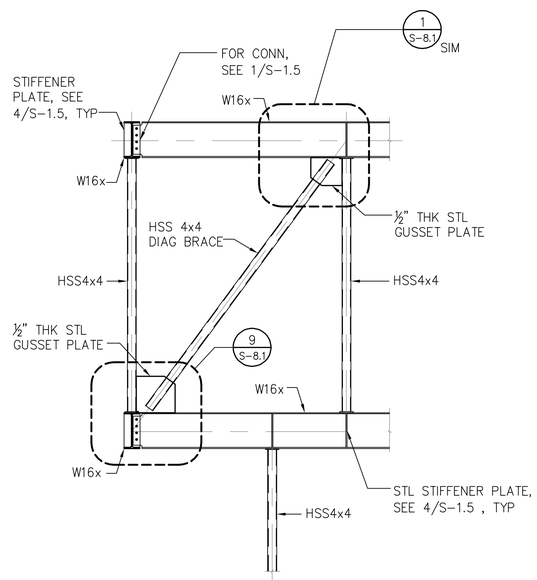

BRACED FRAME BF-6 ELEVATION (BF-7 SIM OPP DIR)

SCALE: 3/8"=1'-0"

IWAMOTO & ASSOCIATES, LLC
STRUCTURAL ENGINEERS
98-029 HOKAHA STREET, SUITE 37
AIEA, HAWAII 96701
PH: (808) 486-5202
FAX: (808)486-5206
email: mail@iwamotollc.com

SOUTH MAUI COMMUNITY PARK RECREATION CENTER

LILOA DRIVE, KIHEI, HAWAII

TMK: (2)-2-2-24:3

NO.	REVISION	DATE

RON E. IWAMOTO
LICENSED PROFESSIONAL ENGINEER
No. 8871-S
HAWAII, U.S.A.

Expiration date of License: 4/30/18

THIS WORK WAS PREPARED BY ME OR UNDER MY SUPERVISION AND CONSTRUCTION OF THIS PROJECT WILL BE UNDER MY OBSERVATION

BRACED FRAME ELEVATIONS

PROJECT NO.	1314
CHECKED BY:	RI
DRAWN BY:	IB
DATE:	11/01/16
SCALE:	AS SHOWN
SHT NO.: ___OF___	S-8.0

DRAWING

NOTE: Wx ROOF FRAMING NOT SHOW FOR CLARITY

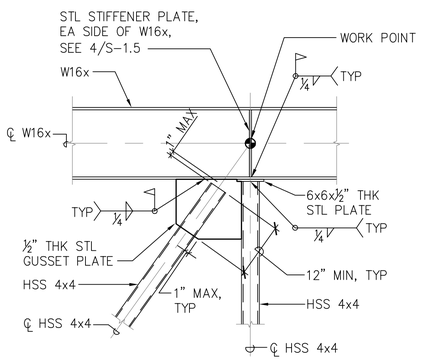

1 S-8.1 DETAILS
SCALE: 3/4"=1'-0"

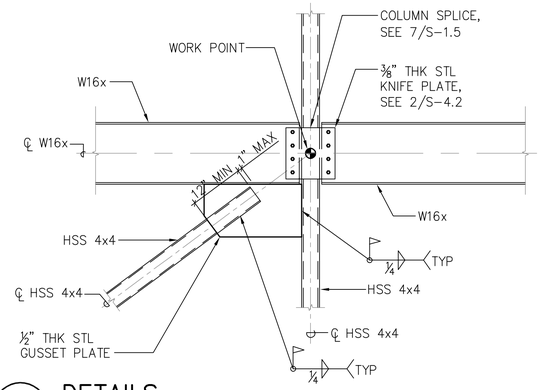

2 S-8.1 DETAILS
SCALE: 3/4"=1'-0"

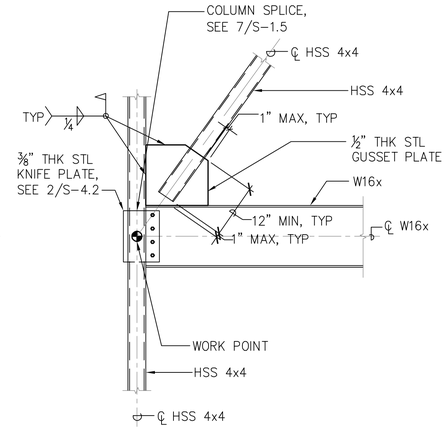

3 S-8.1 DETAILS
SCALE: 3/4"=1'-0"

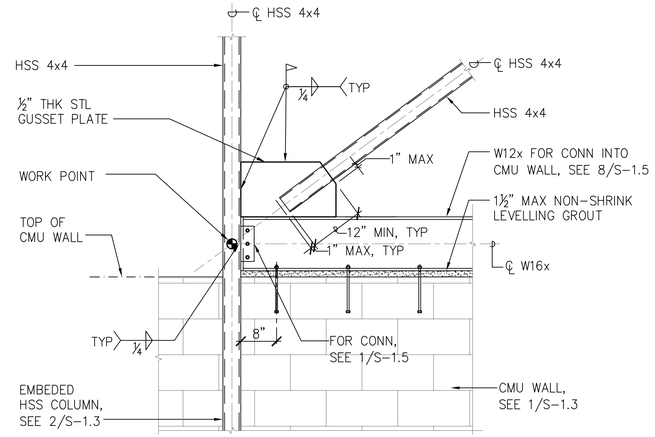

4 S-8.1 DETAILS
SCALE: 3/4"=1'-0"

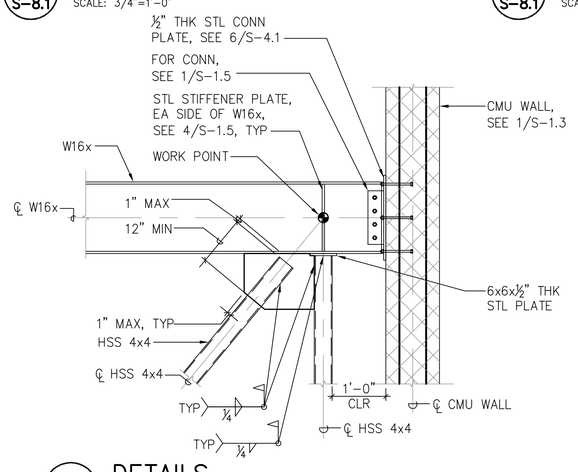

5 S-8.1 DETAILS
SCALE: 3/4"=1'-0"

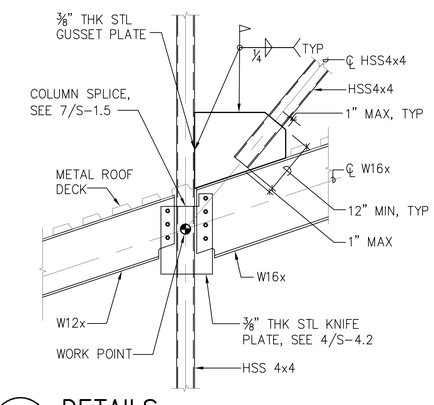

6 S-8.1 DETAILS
SCALE: 3/4"=1'-0"

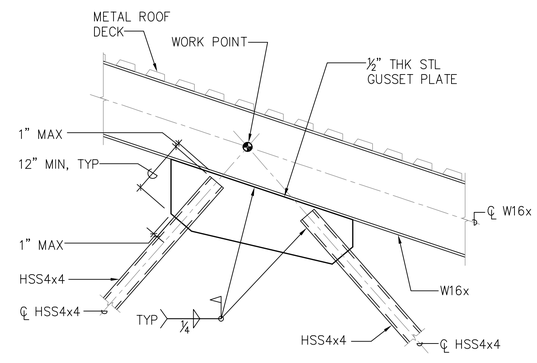

7 S-8.1 DETAILS
SCALE: 3/4"=1'-0"

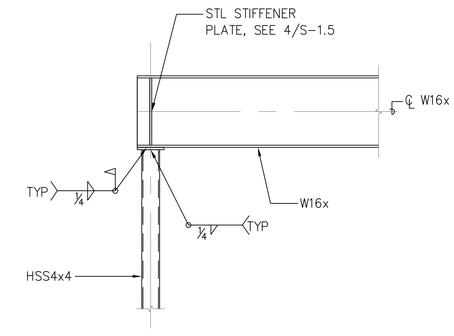

8 S-8.1 DETAIL
SCALE: 3/4"=1'-0"

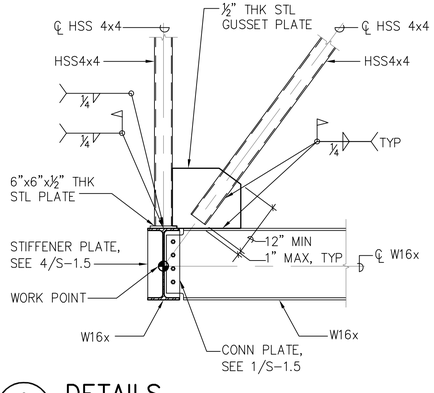

9 S-8.1 DETAILS
SCALE: 3/4"=1'-0"

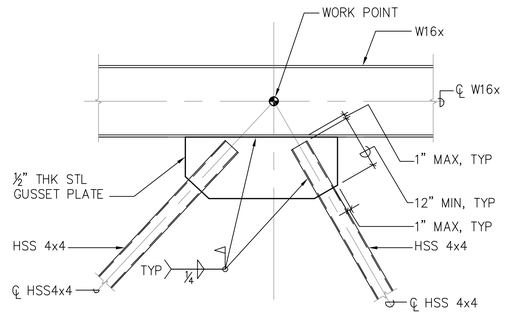

10 S-8.1 DETAILS
SCALE: 3/4"=1'-0"

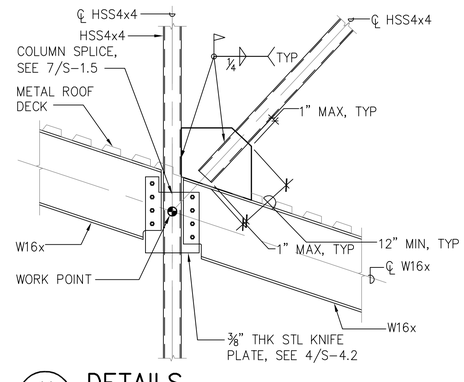

11 S-8.1 DETAILS
SCALE: 3/4"=1'-0"

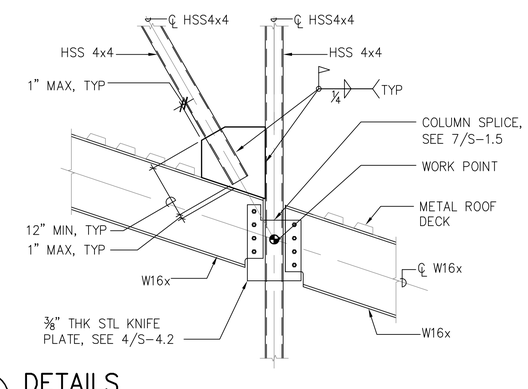

12 S-8.1 DETAILS
SCALE: 3/4"=1'-0"

IWAMOTO & ASSOCIATES, LLC
STRUCTURAL ENGINEERS
98-029 HOKAHA STREET, SUITE 37
AIEA, HAWAII 96701
PH: (808) 486-5202
FAX: (808)486-5206
email: mail@iwamotollc.com

SOUTH MAUI COMMUNITY PARK RECREATION CENTER

LILOA DRIVE, KIHEI, HAWAII
TMK: (2)-2-2-24:3

NO.	REVISION	DATE

RON E. IWAMOTO
LICENSED PROFESSIONAL ENGINEER
No. 8871-S
HAWAII, U.S.A.

Expiration date of License: 4/30/18

THIS WORK WAS PREPARED BY ME OR UNDER MY SUPERVISION AND CONSTRUCTION OF THIS PROJECT WILL BE UNDER MY OBSERVATION

BRACED FRAME DETAILS

PROJECT NO.	1314
CHECKED BY:	RI
DRAWN BY:	IB
DATE:	11/01/16
SCALE:	AS SHOWN
SHT NO.: ___OF___	S-8.1

DRAWING

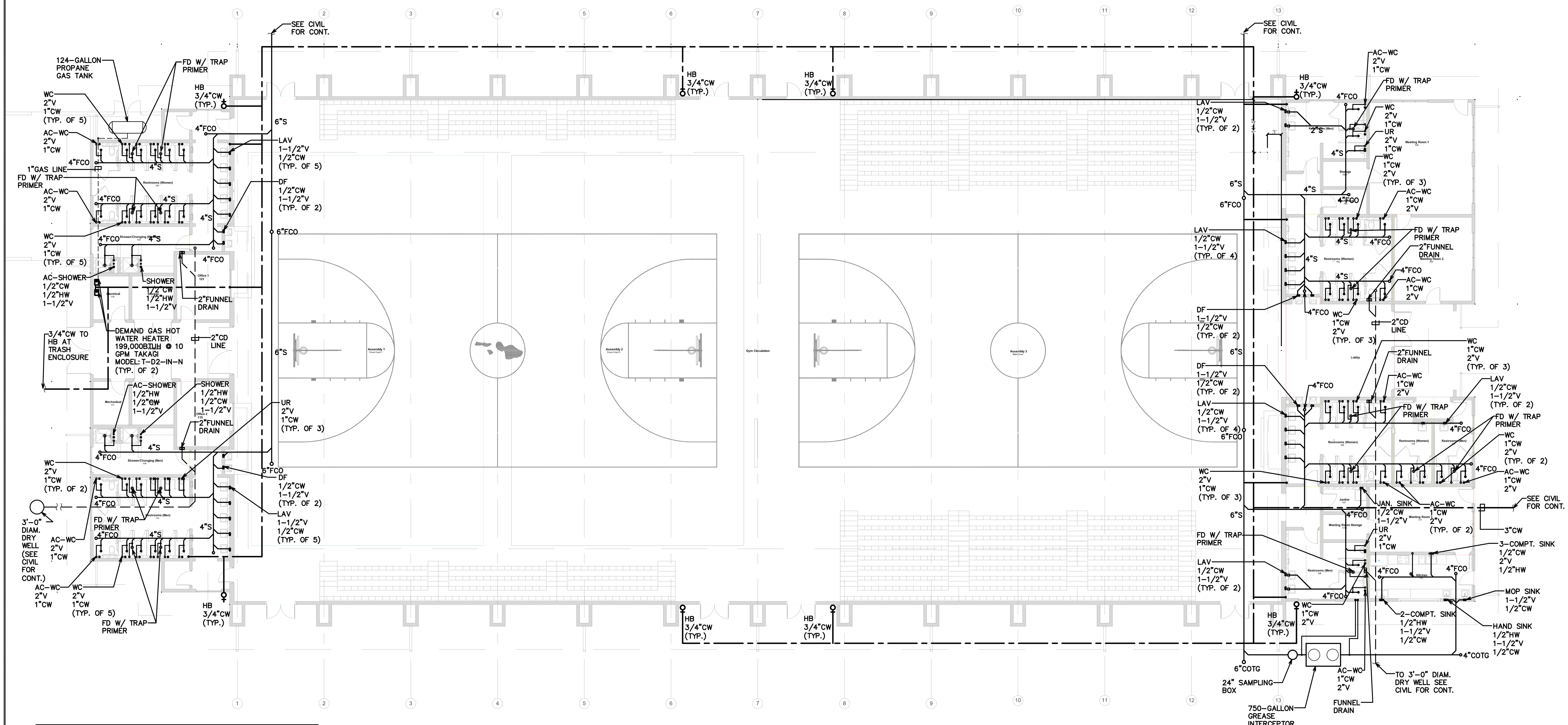

PLUMBING PLAN

1 / M-1 SCALE: 3/32" = 1'-0"

COUNTY OF MAUI
MAUI COUNTY CODE, CHAPTER 16.16A ENERGY CODE

TO THE BEST OF MY KNOWLEDGE, THIS PROJECT' DESIGN SUBSTANCIALLY CONFORMS TO THE ENERGY CODE FOR:

- ☐ BUILDING COMPONENT SYSTEMS
- ☐ ELECTRICAL COMPONENT SYSTEMS
- ☒ MECHANICAL COMPONENT SYSTEMS

SIGNATURE — DATE 6/30/2016

Douglas L. Gomes
NAME

President
TITLE

3646-M
STATE OF HAWAII PROFESSIONAL LICENSE NO.

DOUGLAS L. GOMES — LICENSED PROFESSIONAL ENGINEER — No. 3646-M — HAWAII, U.S.A.

BID SET
11/1/16

THIS WORK WAS PREPARED BY ME OR UNDER MY SUPERVISION AND CONSTRUCTION WILL BE UNDER MY SUPERVISION (SUPERVISION OF CONSTRUCTION AS DEFINED IN SECTION 12 (N) OF THE RULES AND REGULATIONS OF THE BOARD OF PROFESSIONAL ENGINEERS, ARCHITECTS & SURVEYORS OF THE STATE OF HAWAII)

04/30/2018

CHECKED BY: DLG
DRAWN BY: DYG
DESIGNED BY: DLG
DATE: JUNE 30, 2016
JOB NO. 013690

Note: Contractor shall check and verify all dimensions at job before proceeding with work.

SOUTH MAUI COMMUNITY PARK RECREATION CENTER
LILOA DRIVE
KIHEI MAUI, HAWAII
TMK: (2) 2-2-24:03

REVISIONS			
No.	Date	Description	INI.

SHEET NO. M-1
___ OF ___ SHEETS

ENGINEERING DYNAMICS CORP. Civil & Mechanical Engineering Services Maui Office: 66 Wailani Street, Wailuku, Hawaii 96793 Phone: (808) 242-1644 Fax: (808) 242-0838

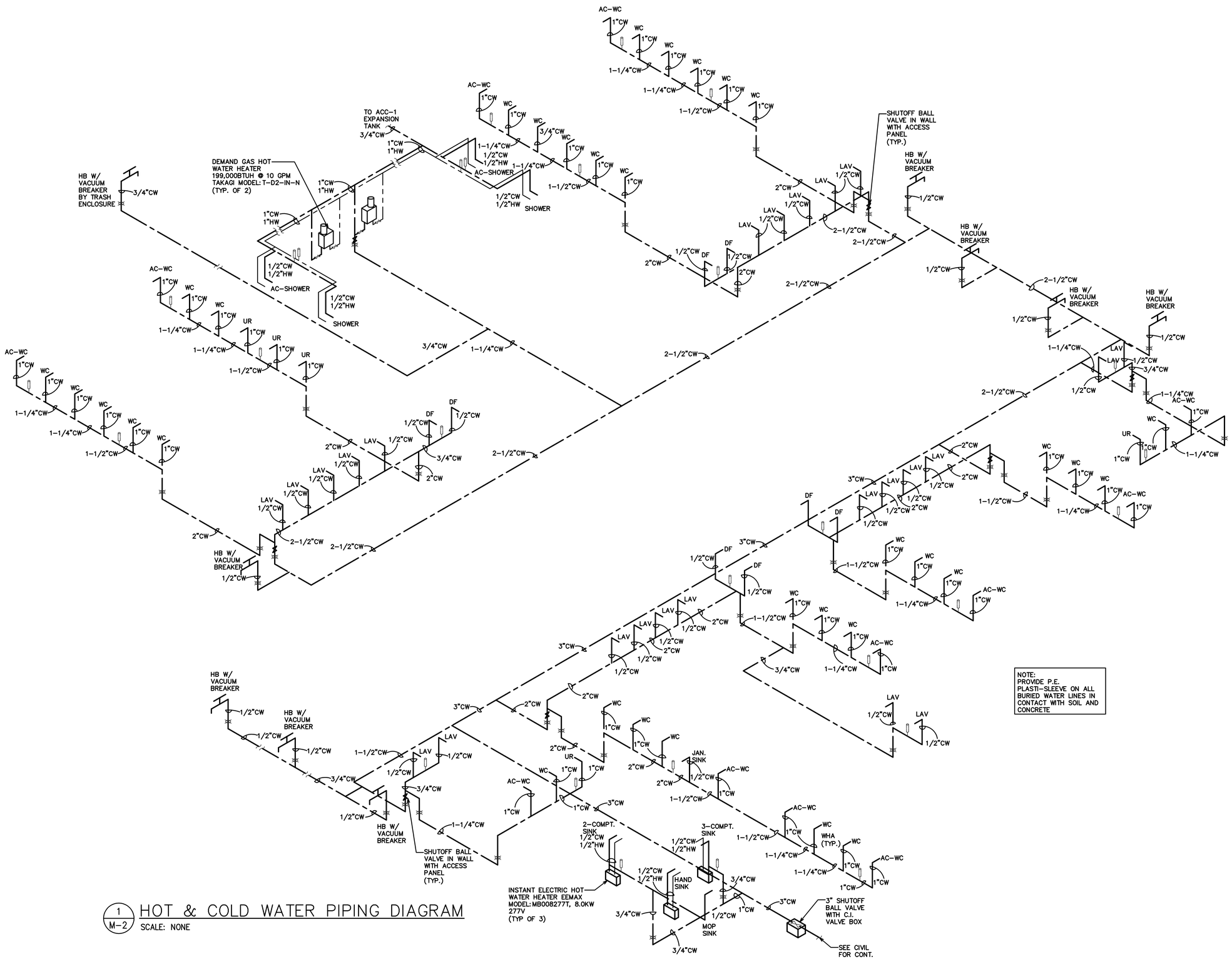

NOTE:
PROVIDE P.E. PLASTI-SLEEVE ON ALL BURIED WATER LINES IN CONTACT WITH SOIL AND CONCRETE

1 / M-2 HOT & COLD WATER PIPING DIAGRAM

SCALE: NONE

BID SET
11/1/16

THIS WORK WAS PREPARED BY ME OR UNDER MY SUPERVISION AND CONSTRUCTION WILL BE UNDER MY SUPERVISION AND INSPECTION OF CONSTRUCTION AS DEFINED IN SECTION 1-2 (N) OF THE RULES AND REGULATIONS OF THE BOARD OF PROFESSIONAL ENGINEERS, ARCHITECTS, SURVEYORS OF THE STATE OF HAWAII)

DOUGLAS L. GOMES LICENSED PROFESSIONAL ENGINEER No. 3646-U HAWAII, U.S.A.

04/30/2018

CHECKED BY: DLG
DRAWN BY: DYG
DESIGNED BY: DLG
DATE: JUNE 30, 2016
JOB NO. 013690

Note: Contractor shall check and verify all dimensions at job before proceeding with work.

SOUTH MAUI COMMUNITY PARK RECREATION CENTER
LILOA DRIVE
KIHEI, MAUI, HAWAII
TMK: (2) 2 - 2 - 24: 03

REVISIONS

No.	Date	Description	INI.

SHEET NO. M-2 OF ___ SHEETS

ENGINEERING DYNAMICS CORP. Civil & Mechanical Engineering Services Maui Office: 66 Wailani Street, Wailuku, Hawaii 96793 Phone: (808) 242-1644 Fax: (808) 242-0838

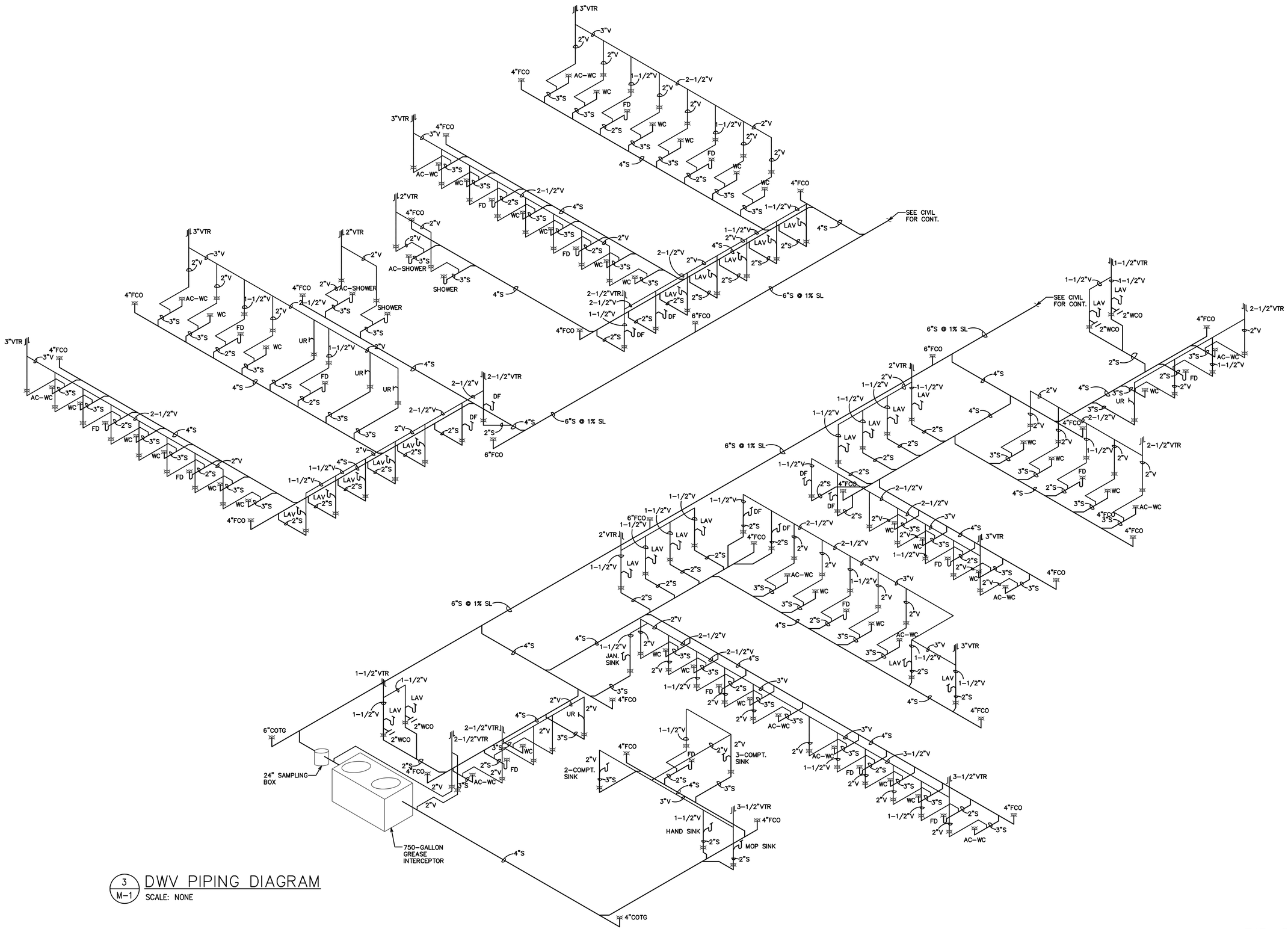

3 / M-1 DWV PIPING DIAGRAM

SCALE: NONE

BID SET
11/1/16

THIS WORK WAS PREPARED BY ME OR UNDER MY SUPERVISION AND CONSTRUCTION WILL BE UNDER MY SUPERVISION AND OBSERVATION OF CONSTRUCTION AS DEFINED IN SECTION 1-2 (N) OF THE RULES AND REGULATIONS OF THE BOARD OF PROFESSIONAL ENGINEERS, ARCHITECTS, SURVEYORS OF THE STATE OF HAWAII)

DOUGLAS L. GOMES * LICENSED PROFESSIONAL ENGINEER No. 3646-U HAWAII, U.S.A. 04/30/2018

CHECKED BY: DLG
DRAWN BY: DYG
DESIGNED BY: DLG
DATE: JUNE 30, 2016
JOB NO. 013690

Note: Contractor shall check and verify all dimensions at job before proceeding with work.

SOUTH MAUI COMMUNITY PARK RECREATION CENTER
LILOA DRIVE
KIHEI, MAUI, HAWAII
TMK: (2) 2 - 2 - 24: 03

REVISIONS

No.	Date	Description	INI.
△			
△			
△			

SHEET NO. M-3 ___OF___ SHEETS

ENGINEERING DYNAMICS CORP. Civil & Mechanical Engineering Services Maui Office: 66 Wailani Street, Wailuku, Hawaii 96793 Phone: (808) 242-1644 Fax: (808) 242-0838

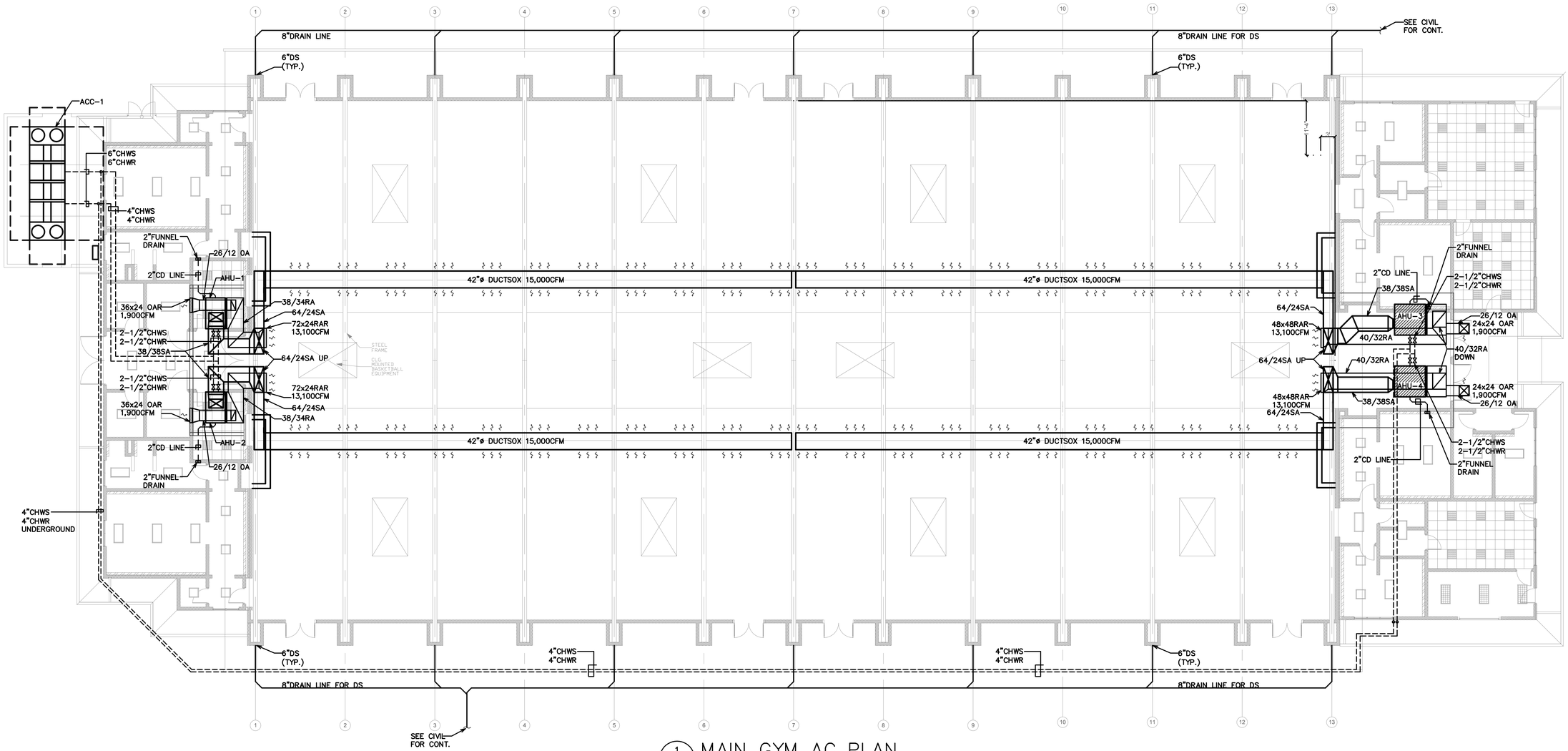

1 M-4 MAIN GYM AC PLAN
SCALE: 3/32" = 1'-0"

AC EQUIPMENT SCHEDULE

UNIT NO.	MAKE AND MODEL	COOLING CAPACITY (BTUH)			AIR VOLUME		VOLT/PHASE/HZ	MCA	COMPR QTY.	COMPR RLA (EA.)	COMPR LRA (EA.)	REMARKS
		SENSIBLE	TOTAL	TONS	CFM	EXT. SP (IN)						
AHU-1	CARRIER MODEL 39LD25	528,000	600,000	50.0	15,000	1.5	480-3-60	218				
AHU-2	CARRIER MODEL 39LD25	528,000	600,000	50.0	15,000	1.5	480-3-60	218				
AHU-3	CARRIER MODEL 39LA25	528,000	600,000	50.0	15,000	1.5	480-3-60	218				
AHU-4	CARRIER MODEL 39LA25	528,000	600,000	50.0	15,000	1.5	480-3-60	218				
ACC-1	CARRIER MODEL 30RB225	2,112,000	2,400,000	200.0			460-3-60	260		41.6	260	PUMP FOR CHILLED WATER: 525GPM @ 35'TDH

ALL CONDENSING UNITS SHALL BE PROVIDED WITH CORROSION PROTECTION: "BLYGOLD POLUAI XT" COATING FOR THE COILS AND PSX700 COATING FOR THE CASING

BID SET
11/1/16

THIS WORK WAS PREPARED BY ME OR UNDER MY SUPERVISION AND CONSTRUCTION WILL BE UNDER MY SUPERVISION AND WITNESS TO THE STRUCTION AS DEFINED IN SECTION 1-2 (N) OF THE RULES AND REGULATIONS OF THE BOARD OF REGISTRATION FOR PROFESSIONAL ENGINEERS, ARCHITECTS, SURVEYORS OF THE STATE OF HAWAII)

DOUGLAS L. GOMES * LICENSED PROFESSIONAL ENGINEER No. 3646-U * HAWAII, U.S.A.
04/30/2018

CHECKED BY: DLG
DRAWN BY: DYG
DESIGNED BY: DLG
DATE: JUNE 30, 2016
JOB NO. 013690

Note: Contractor shall check and verify all dimensions of job before proceeding with work.

SOUTH MAUI COMMUNITY PARK RECREATION CENTER
LILOA DRIVE
KIHEI, MAUI, HAWAII
TMK: (2) 2 - 2 - 26 03

REVISIONS

No.	Date	Description	INI.

SHEET NO. M-4 OF ___ SHEETS

ENGINEERING DYNAMICS CORP. Civil & Mechanical Engineering Services Maui Office: 66 Wailani Street, Wailuku, Hawaii 96793 Phone: (808) 242-1644 Fax: (808) 242-0838

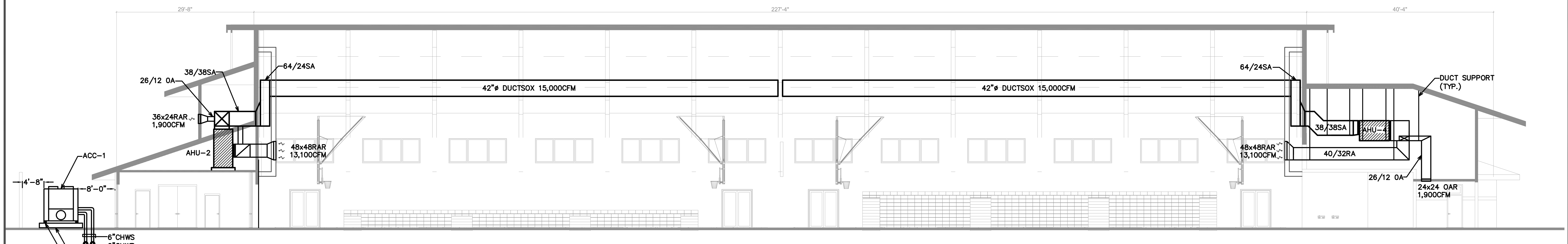

1 M-5 LONGITUDINAL SECTION
SCALE: 3/32" = 1'-0"

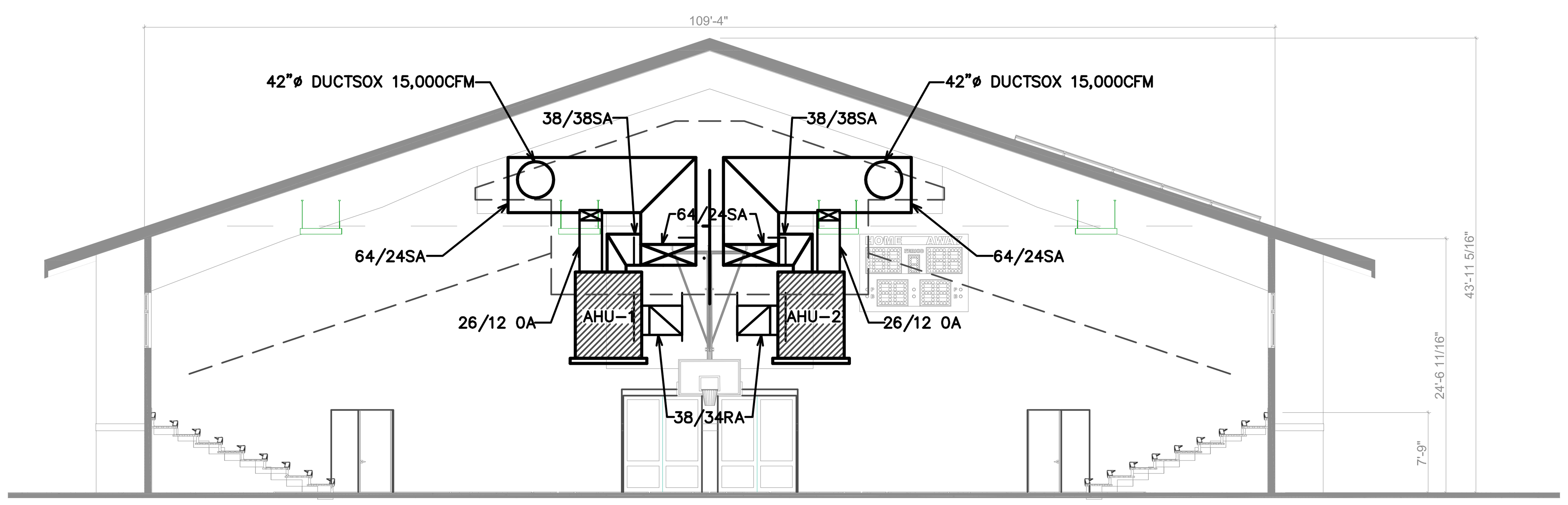

2 M-5 NORTH SECTION
SCALE: 3/32" = 1'-0"

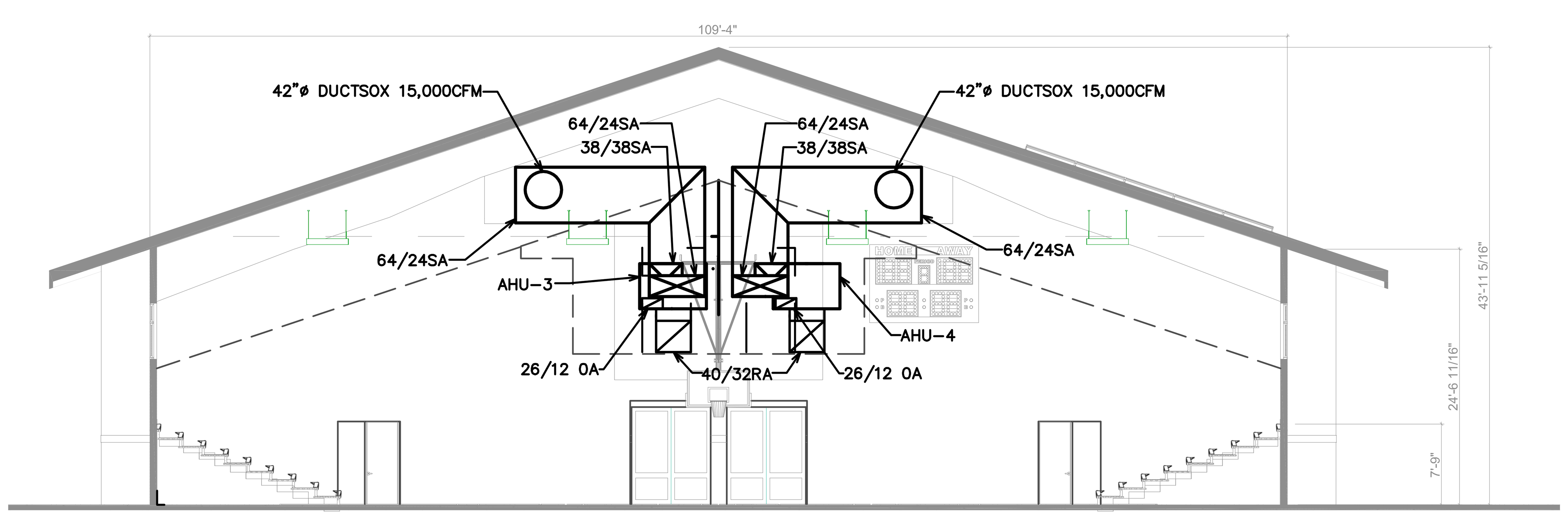

4 M-5 SOUTH SECTION
SCALE: 3/32" = 1'-0"

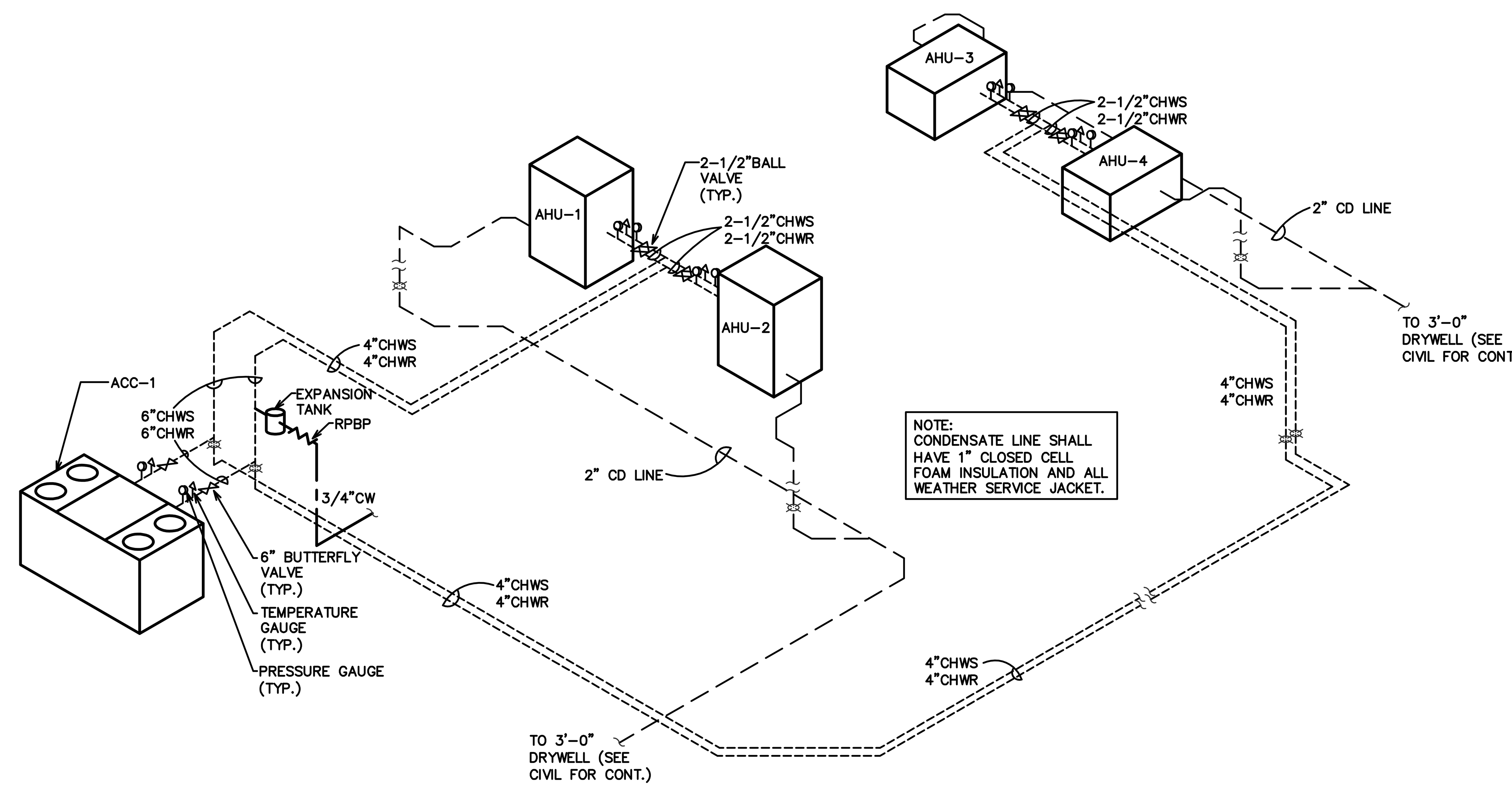

3 M-5 CHILLED WATER PIPING DIAGRAM
SCALE: NONE

BID SET
11/1/16

THIS WORK WAS PREPARED BY ME OR UNDER MY SUPERVISION AND CONSTRUCTION WILL BE UNDER MY SUPERVISION. (SUPERVISION OF CONSTRUCTION AS DEFINED IN SECTION 1.2 (N) OF THE RULES AND REGULATIONS OF THE BOARD OF PROFESSIONAL ENGINEERS, ARCHITECTS & SURVEYORS OF THE STATE OF HAWAII)

DOUGLAS L. GOMES ★ LICENSED PROFESSIONAL ENGINEER No. 3646-M ★ HAWAII, U.S.A.
04/30/2018

CHECKED BY:	DLG
DRAWN BY:	DYG
DESIGNED BY:	DLG
DATE:	JUNE 30, 2016
JOB NO.	013690

Note: Contractor shall check and verify all dimensions at job before proceeding with work.

SOUTH MAUI COMMUNITY PARK RECREATION CENTER
LILOA DRIVE
KIHEI, MAUI, HAWAII
TMK (2) 2-2-24:03

REVISIONS

No.	Date	Description	INI.
△			
△			
△			

SHEET NO. M-5
___OF___ SHEETS

ENGINEERING DYNAMICS CORP. Civil & Mechanical Engineering Services Maui Office: 66 Wailani Street, Wailuku, Hawaii 96793 Phone: (808) 242-1644 Fax: (808) 242-0838

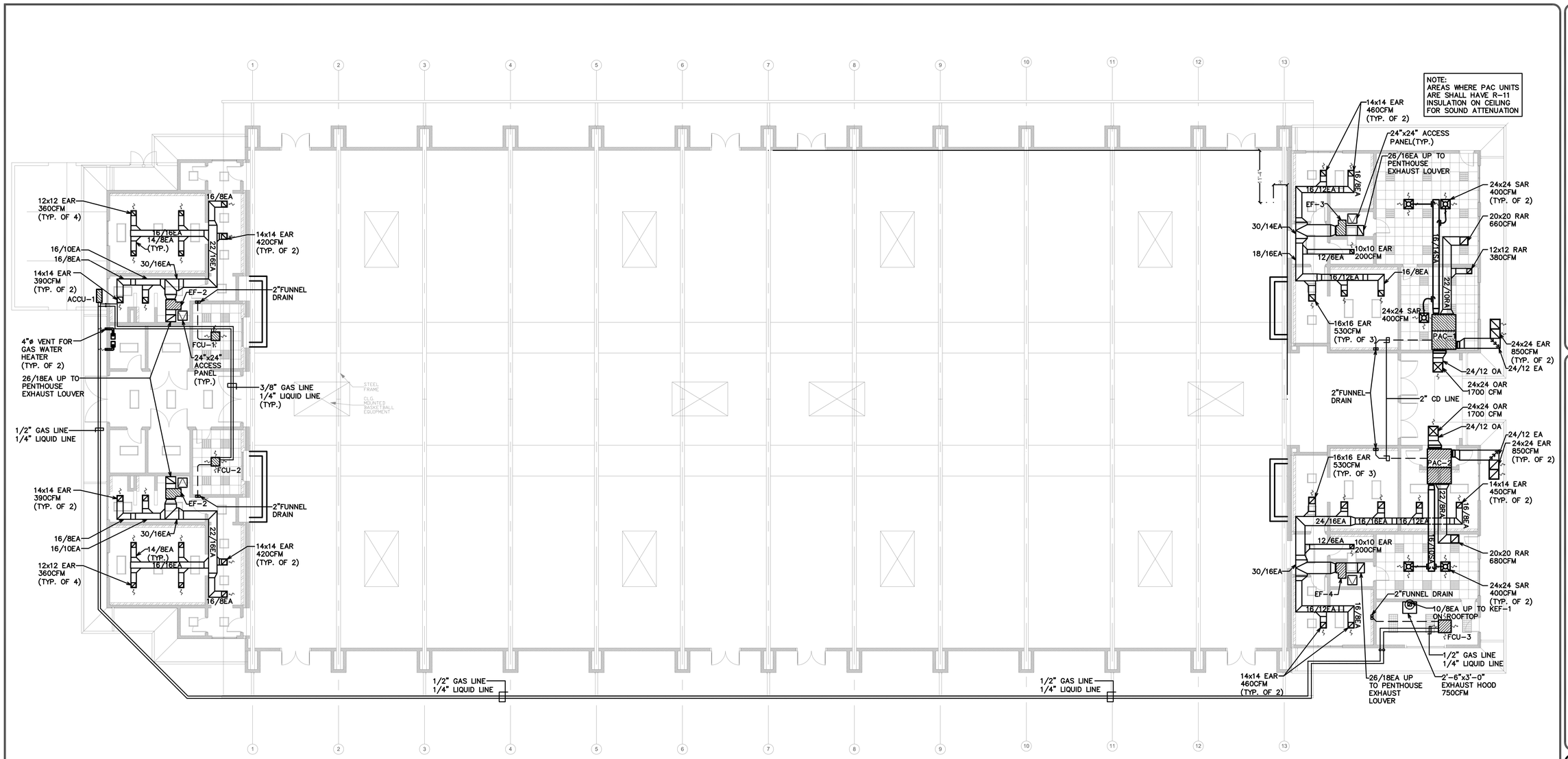

1 / M-6 MECHANICAL PLAN
SCALE: 3/32" = 1'-0"

AC EQUIPMENT SCHEDULE

UNIT NO.	MAKE AND MODEL	COOLING CAPACITY (BTUH)			AIR VOLUME		VOLT/PHASE/HZ	MCA	COMPR QTY.	COMPR RLA (EA.)	COMPR LRA (EA.)	REMARKS
		SENSIBLE	TOTAL	TONS	CFM	EXT. SP (IN)						
PAC-1	CARRIER MODEL 50AH036	24700	33,900	3.0	1,200	1.0	208/230-1-60			16.7	79	
PAC-2	CARRIER MODEL 50AH024	17,200	23,500	2.0	800	1.0	208/230-1-60			13.5	58	
FCU-1	MITSUBISHI MODEL PLFY-P08NCMU	6,400	8,000	0.75	350		208/230-1-60					
FCU-2	MITSUBISHI MODEL PLFY-P08NCMU	6,400	8,000	0.75	350		208/230-1-60					
FCU-3	MITSUBISHI MODEL PLFY-P12NCMU	9,600	12,000	1.0	460		208/230-1-60					
ACCU-1	MITSUBISHI MODEL PUMY-P36NHMU	28,800	36,000	3.0			208/230-1-60					

VENTILATION EQUIPMENT SCHEDULE

NAME	CFM	S.P. (INCHES) W.G.	MOTOR DATA				MAKE AND MODEL	REMARKS
			RPM	HP	WATTS	VOLT/PHASE/HZ		
EF-1	3060	1.00	1387	1		208/230-1-60	GREENHECK BSQ-160-10	PROVIDE TEFC MOTOR, W/ VFD FOR SPEED ADJUSTMENT
EF-2	3060	1.00	1387	1		208/230-1-60	GREENHECK BSQ-160-10	PROVIDE TEFC MOTOR, W/ VFD FOR SPEED ADJUSTMENT
EF-3	2710	1.00	1387	1		208/230-1-60	GREENHECK BSQ-160-10	PROVIDE TEFC MOTOR, W/ VFD FOR SPEED ADJUSTMENT
EF-4	3610	1.00	1588	1.5		208/230-1-60	GREENHECK BSQ-160-15	PROVIDE TEFC MOTOR, W/ VFD FOR SPEED ADJUSTMENT
KEF-1	750	1.00	2500	0.5		208/230-1-60	GREENHECK CUBE-101HP	PROVIDE TEFC MOTOR

BID SET
11/1/16

THIS WORK WAS PREPARED BY ME OR UNDER MY SUPERVISION AND CONSTRUCTION WILL BE UNDER MY SUPERVISION OR OBSERVATION OF CONSTRUCTION AS DEFINED IN SECTION 1-2 (N) OF THE RULES AND REGULATIONS OF THE BOARD OF REGISTRATION FOR PROFESSIONAL ENGINEERS, ARCHITECTS, SURVEYORS OF THE STATE OF HAWAII

DOUGLAS L. GOMES * LICENSED PROFESSIONAL ENGINEER No. 3646-U * HAWAII, U.S.A.
04/30/2018

CHECKED BY: DLG
DRAWN BY: DYG
DESIGNED BY: DLG
DATE: JUNE 30, 2016
JOB NO. 013690

Note: Contractor shall check and verify all dimensions of job before proceeding with work.

SOUTH MAUI COMMUNITY PARK RECREATION CENTER
LILOA DRIVE
KIHEI, MAUI, HAWAII
TMK: (2) 2-2-24-03

REVISIONS

No.	Date	Description	INI.

SHEET NO. M-6 OF ___ SHEETS

ENGINEERING DYNAMICS CORP. Civil & Mechanical Engineering Services Maui Office: 66 Wailani Street, Wailuku, Hawaii 96793 Phone: (808) 242-1644 Fax: (808) 242-0838

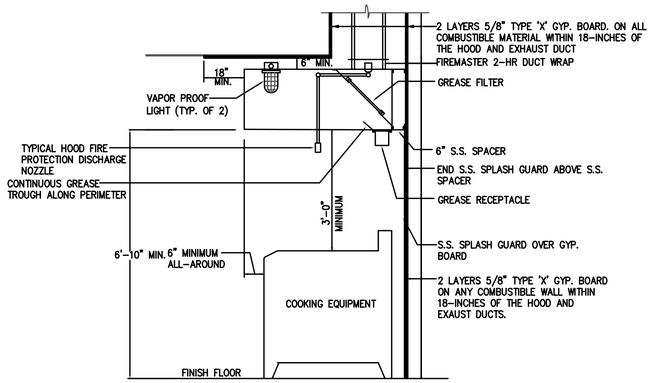

1 / M-7 KITCHEN HOOD SECTION
SCALE: NONE

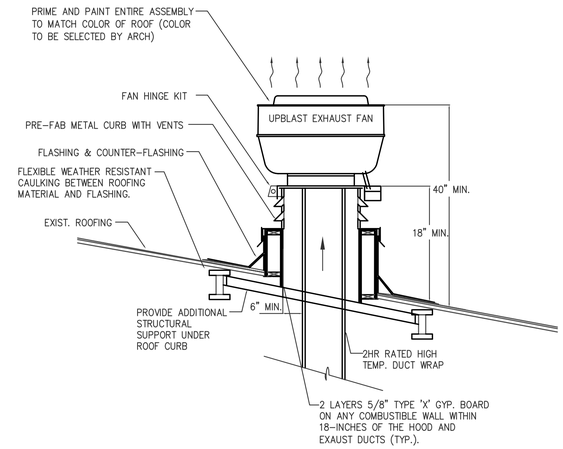

2 / M-7 KITCHEN EXHAUST FAN DETAIL
SCALE: NONE

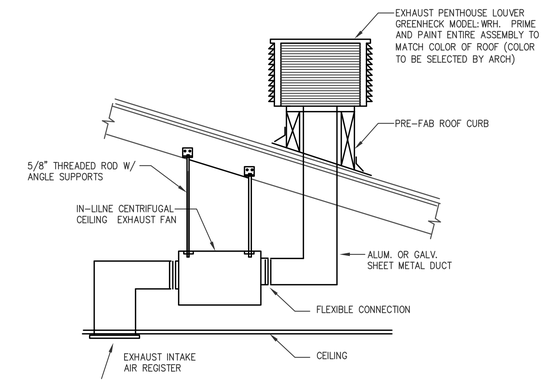

3 / M-7 EXHAUST FAN DETAIL
SCALE: NONE

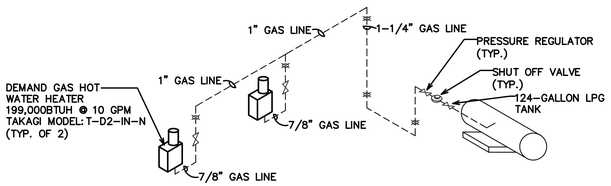

4 / M-7 GAS PIPING DIAGRAM
SCALE: NONE

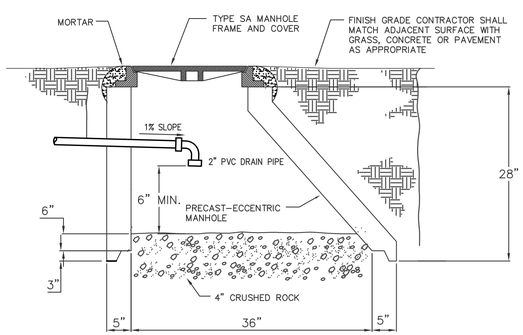

5 / M-7 DRYWELL DETAIL
SCALE: NONE

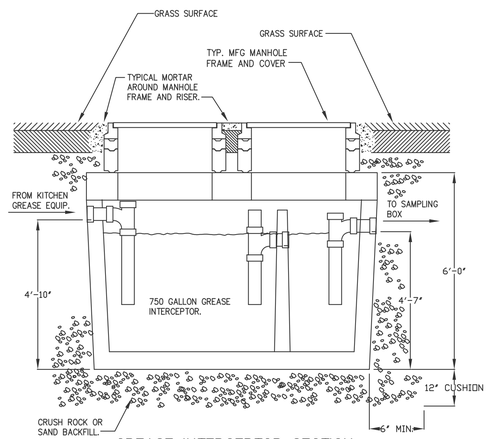

GREASE INTERCEPTOR SECTION
NOT TO SCALE

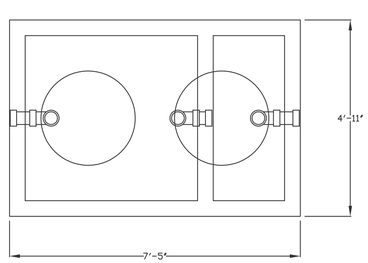

GREASE INTERCEPTOR PLAN
NOT TO SCALE

6 / M-7 GREASE INTERCEPTOR DETAIL
SCALE: NONE

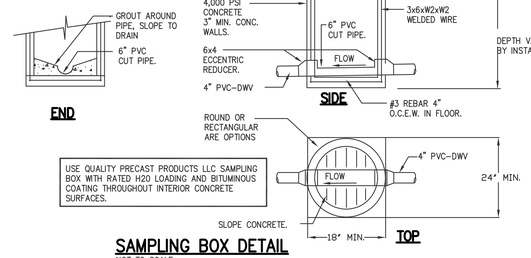

USE QUALITY PRECAST PRODUCTS LLC SAMPLING BOX WITH RATED H20 LOADING AND BITUMINOUS COATING THROUGHOUT INTERIOR CONCRETE SURFACES.

SAMPLING BOX DETAIL
NOT TO SCALE

GREASE INTERCEPTOR SHALL BE IAPMO CERTIFIED WITH AN ACID RESISTANT INTERIOR COATING (BITUMINOUS COATING OR EQUAL). IF INTERCEPTOR IS INSTALLED WITHIN 3 FEET OF WATER TABLE OR IF WATER IS OR WILL BE ENCOUNTERED, PROVIDE WATER PROOF COATING ON THE EXTERIOR OF THE INTERCEPTOR, AS WELL AS, THE INTERIOR. PROVIDE GAS TIGHT LIDS. NOTE THAT ALL PIPING WITHIN THE INTERCEPTOR SHALL BE ACCESSIBLE FROM MANHOLES.

GREASE INTERCEPTOR AND SAMPLING BOX NOTES

1. ALL GREASE INTERCEPTORS SHALL BE LISTED WITH IAPMO (INTERNATIONAL ASSOCIATION OF PLUMBING AND MECHANICAL OFFICIALS) AND BEAR A STAMP SHOWING SUCH CERTIFICATION.
2. THE GREASE INTERCEPTOR SIZE (GALLON LIQUID CAPACITY) MUST BE APPROVED BY COUNTY OF MAUI WASTEWATER RECLAMATION DIVISION (WWRD) PRIOR TO INSTALLATION.
3. 100% OF THE INTERIOR OF THE INTERCEPTOR SHALL BE COATED WITH AN ACID-RESISTANT COATING (APPROVED BY WWRD) INCLUDING THE RING AND COVER.
4. 100% OF THE EXTERIOR OF THE INTERCEPTOR SUSCEPTIBLE TO GROUND WATER INTRUSIONS SHALL BE COATED WITH WATER RESISTANT MATERIAL.
5. GREASE INTERCEPTORS SHALL BE CONSTRUCTED WITH MANHOLES OVER THE INLET, OUTLET AND BAFFLE WALL CROSSOVER PIPING FOR PURPOSES OF ACCESS, INSPECTION AND CLEANING.
6. INTERCEPTOR AND SAMPLE BOX RISERS SHALL BE SEALED WITH A RAMNECK TYPE SEALANT PRODUCT AND ALL JOINTS GROUTED TO RING AND COVER.
7. INTERCEPTORS AND COVERS MUST MEET VEHICLE LOADING REQUIREMENTS (H20) PER IAPMO STANDARS IF THE INTERCEPTOR IS LOCATED IN A POTENTIAL VEHICLE TRAFFIC AREA.
8. SAMPLE BOXES AND COVERS MUST MEET VEHICLE LOADING REQUIREMENTS (H20) IF LOCATED IN A POTENTIAL VEHICLE TRAFFIC AREA.
9. THE INTERCEPTOR SHALL BE VENTED AT THE INLET AND OUTLET OF THE TANK.
10. MANHOLE COVERS SHALL BE GAS TIGHT IN CONSTRUCTION AND HAVE A MINIMUM SIZE OPENING OF 24".
11. THE SAMPLE BOX SHALL BE CONSTRUCTED OF CONCRETE WITH MINIMUM DIMENSIONS OF 12"x18" AND INCLUDE A 6" FLOW THROUGH CHANNEL FOR TAKING SAMPLES. THE BOX SHAPE MAY BE CIRCULAR (WITH MANHOLE COVER) OR RECTANGULAR.
12. 100% OF THE INTERIOR OF THE SAMPLE BOX SHALL BE COATED WITH ACID-RESISTANT MATERIAL APPROVED BY WWRD.
13. 100% OF THE EXTERIOR OF THE SAMPLE BOX SUSCEPTIBLE TO GROUND WATER INTRUSIONS SHALL BE COATED WITH WATER RESISTANT MATERIAL.
14. THE DISCHARGE REDUCER ON THE SAMPLE BOX SHALL BE ECCENTRIC SO AS NOT TO IMPEDE FLOW THROUGH THE CHANNEL.
15. ANY FIXTURE CONNECTED TO AN INTERCEPTOR SHALL HAVE A NON-REMOVABLE, SECURED PERFORATED METAL FOOD SCREEN, NO LARGER THAN 1/8" EYE HOLE SIZE.
16. INSPECTION (BY WWRD) OF INSTALLED INTERCEPTORS AND PIPING PRIOR TO BACKFILLING IS REQUIRED. PIPING SHALL MEET THE REQUIREMENTS OF THE UNIFORM PLUMBING CODE.CONTACT WWRD AT 270-7417 TO SCHEDULE INSPECTION.
17. FINAL INSPECTION OF INSTALLED INTERCEPTORS, SAMPLE BOX, AND PIPING BY WWRD IS REQUIRED PON COMPLETION OF WORK. FINAL INSPECTION IS REQUIRED PRIOR TO CERTIFICATE OF OCCUPANCY CLEARANCE BY WWRD. CONTACT WWWRD AT 270-7417 TO SCHEDULE INSPECTION.
18. CONTRACTOR SHALL SUBMIT AS-BUILT DRAWINGS TO WWRD AT COMPLETION OF WORK. AS-BUILTS ARE REQUIRED PRIOR TO FINAL APPROVAL AND CERTIFICATE OF OCCUPANCY SIGN-OFF.

BID SET
11/1/16

THIS WORK WAS PREPARED BY ME OR UNDER MY SUPERVISION AND CONSTRUCTION WILL BE UNDER MY SUPERVISION AND WITNESSED. CONSTRUCTION AS DEFINED IN SECTION 1.2 (N) OF THE RULES AND REGULATIONS OF THE BOARD OF PROFESSIONAL ENGINEERS, ARCHITECTS, SURVEYORS OF THE STATE OF HAWAII)

DOUGLAS L. GOMES * LICENSED PROFESSIONAL ENGINEER No. 3646-U HAWAII, U.S.A. 04/30/2018

CHECKED BY:	DLG
DRAWN BY:	DYG
DESIGNED BY:	DLG
DATE:	JUNE 30, 2016
JOB NO.	013690

Note: Contractor shall check and verify all dimensions of job before proceeding with work.

SOUTH MAUI COMMUNITY PARK RECREATION CENTER
LILOA DRIVE
KIHEI, MAUI HAWAII
TMK: (2) 2 - 2 - 24: 03

REVISIONS			
No.	Date	Description	INI.

SHEET NO. M-7 OF ___ SHEETS

ENGINEERING DYNAMICS CORP. Civil & Mechanical Engineering Services Maui Office: 66 Wailani Street, Wailuku, Hawaii 96793 Phone: (808) 242-1644 Fax: (808) 242-0838

CONSTRUCTION NOTES

1. THE WORK SHALL IN GENERAL SHALL CONSIST OF A NEW GYMNASIUM.
   A. DRAIN, WASTE, VENT PLUMBING LINES AND FIXTURES.
   B. AC/VENTILATION EQUIPMENT AND DUCT WORK.
2. CONTRACTOR SHALL VISIT THE SITE AND BE COMPLETELY FAMILIAR WITH THE EXISTING CONDITIONS AND THE AMOUNT AND KIND OF WORK TO BE PERFORMED. EXISTING CONDITIONS ARE BASED ON BEST AVAILABLE INFORMATION. CONTRACTOR SHALL VERIFY THE LOCATION, INVERT, SIZE AND CONDITION OF EXISTING UTILITIES AND NOTIFY THE ENGINEER IMMEDIATELY IF ANY DISCREPANCIES ARE ENCOUNTERED.
3. FOR THE ACTUAL FABRICATION, INSTALLATION, AND TESTING OF WORK UNDER THIS SECTION, THE CONTRACTOR SHALL USE ONLY THOROUGHLY TRAINED AND EXPERIENCED WORKMEN, COMPLETELY FAMILIAR WITH THE ITEMS REQUIRED AND WITH THE MANUFACTURERS' RECOMMENDATIONS AS TO THEIR USE.
4. ALL WORK SHALL CONFORM TO THE LATEST APPLICABLE RULES, REGULATIONS, REQUIREMENTS AND SPECIFICATIONS OF THE LAWS AND ORDINANCES, STATE AND FEDERAL LAWS, MAUI COUNTY CODES, UNIFORM BUILDING CODE, UNIFORM PLUMBING CODE, UNIFORM MECHANICAL CODE, NATIONAL FIRE CODE, NATIONAL FIRE PROTECTION ASSOCIATION REQUIREMENTS, NATIONAL ELECTRIC CODE, LIFE SAFETY CODE, AMERICAN DISABILITIES ACT 2010 ADA STANDARDS FOR ACCESSIBLE DESIGN, AND ALL OTHER APPLICABLE CODES AND STANDARDS.
5. ALL SITE UTILITY AND ROADWAY WORK SHALL CONFORM TO THE STANDARD DETAILS FOR PUBLIC WORK CONSTRUCTION DATED SEPTEMBER 1984 AND THE STANDARD SPECIFICATIONS FOR PUBLIC WORK CONSTRUCTION DATED SEPTEMBER 1986. ALL WORK INVOLVING WATER SHALL CONFORM TO WATER SYSTEM STANDARDS, STATE OF HAWAII 2002 WITH REVISIONS
6. CONTRACTOR SHALL CALL TO THE ATTENTION OF THE ENGINEER, ARCHITECT, AND OWNER ANY DISCREPANCIES FOUND ON THE PLANS, NOTES, AND SPECIFICATIONS PRIOR TO BIDDING.
7. CONTRACTOR SHALL PROVIDE, INSTALL AND MAINTAIN ALL NECESSARY SIGNS, LIGHTS, FLARES, BARRICADES, AND OTHER PROTECTIVE DEVICES FOR THE PROTECTION, SAFETY AND CONVENIENCE OF THE PUBLIC.
8. CONTRACTOR SHALL VERIFY THE LOCATION OF ALL EXISTING UTILITIES AND REPAIR OR REPLACE ALL DAMAGES AT HIS OWN EXPENSES.
9. CONTRACTOR SHALL OBTAIN ALL NECESSARY PERMITS AND PAY ALL APPLICABLE FEES PRIOR TO COMMENCING ANY WORK.
10. CONTRACTOR SHALL PROVIDE (4) SETS OF SHOP DRAWINGS FOR ALL MATERIALS AND EQUIPMENT FOR APPROVAL BY THE ENGINEER PRIOR TO COMMENCING ANY WORK. ALL WORK DONE WITHOUT PRIOR APPROVAL SHALL BE SUBJECT TO REPAIR OR REPLACEMENT AT NO ADDITIONAL COST TO THE OWNER.
11. MATERIALS: MANUFACTURERS LISTED BELOW SHOW STYLE AND QUALITY. EQUIVALENT FIXTURES MAY BE SUBSTITUTED WITH APPROVAL OF THE ENGINEER.
12. PLUMBING:
    A. SOIL, WASTE, VENT PIPES SHALL BE CELLULAR CORE DWV SCHEDULE 40 PVC PIPE AND FITTINGS.
    B. WATER LINES – COPPER, TYPE "L" ABOVEGROUND. HOT WATER LINES SHALL BE INSULATED WITH 1– INCH RUBATEX OR APPROVED EQUAL. ALL COPPER LINES AND FITTINGS BELOW GRADE SHALL BE PROTECTED WITH 4 MIL. POLYETHYLENE PLASTI–SLEEVE PIPE PROTECTOR.
    C. WATER HAMMER ARRESTERS– JAY R. SMITH FIGURE 5005, ZURN Z–1700, OR EQUAL.
13. AC/VENTILATION
    A. DUCT WORK: DUCT WORK SIZES SHOWN ON THE DRAWINGS ARE INSIDE NET DIMENSIONS. ALL WORK SHALL BE IN ACCORDANCE WITH THE REQUIREMENTS OF ASHRAE AND SMACNA. ROUND AND RECTANGULAR DUCTS SHALL BE MADE OF GALVANIZED SHEET METAL WITH INTERIOR INSULATION.
    B. EXHAUST FANS SHALL BE GREENHECK, COOK, PENN ZEPHYR OR EQUAL, IN–LINE CABINET FAN WITH CAPACITY AS SHOWN OR SPECIFIED.
    F. CONTRACTOR SHALL PROVIDE A TEST AND BALANCE REPORT SHOWING PROPOSED AND ACTUAL AIR FLOW, STATIC AIR PRESSURES, EQUIPMENT RATINGS AND ACTUAL MEASURED RATINGS, INCLUDING VOLTAGES, AMPERAGE, AND RPMS.
14. CONTRACTOR SHALL PROVIDE AS–BUILT DRAWINGS SHOWING ANY AND ALL CHANGES THAT DIFFER FROM THE CONTRACT DOCUMENTS (PLANS AND SPECIFICATIONS) UPON COMPLETION AND ACCEPTANCE OF THE WORK.
15. CONTRACTOR SHALL PROVIDE A WRITTEN GUARANTEE TO REPAIR OR REPLACE AT HIS OWN EXPENSE ANY PARTS THAT MAY DEVELOP ANY DEFECTS DUE TO FAULTY MATERIALS OR WORKMANSHIP FOR A PERIOD OF ONE (1) YEAR AFTER FINAL PAYMENT.

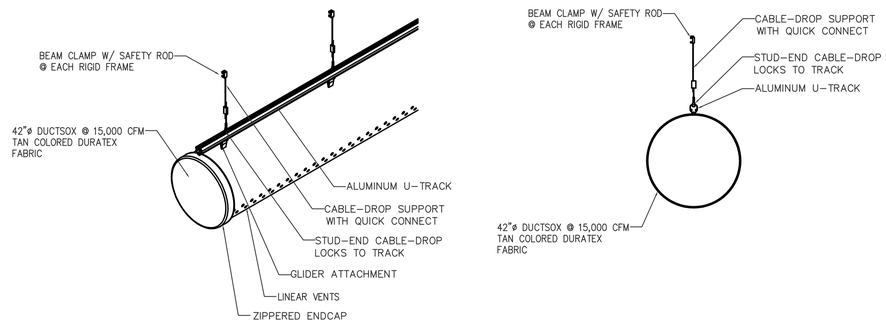

1 / M-8 DUCTSOX SUPPORT DETAIL
SCALE: NONE

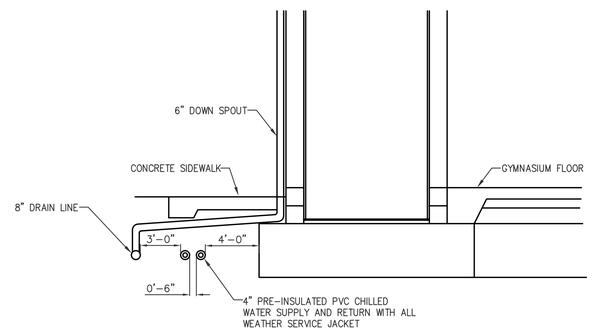

2 / M-8 DETAIL FOR CHILLED WATER SUPPLY AND RETURN
SCALE: NONE

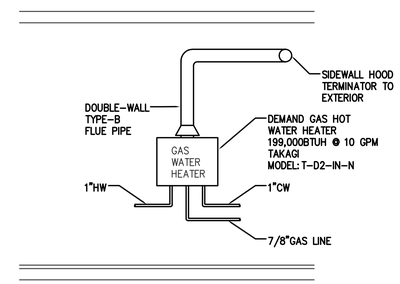

3 / M-8 DEMAND GAS HOT WATER HEATER DETAIL
SCALE: NONE

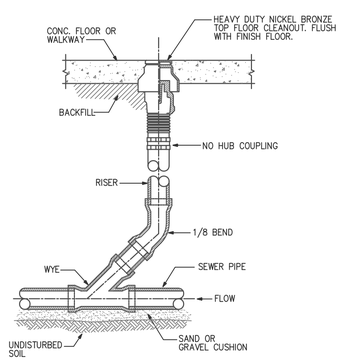

FLOOR CLEANOUT

4 / M-8 CLEANOUT DETAIL
SCALE: NONE

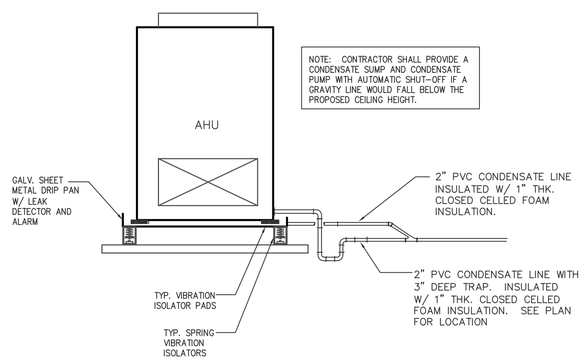

5 / M-8 AHU–1 AND AHU–2 SUPPORT DETAIL
SCALE: NONE

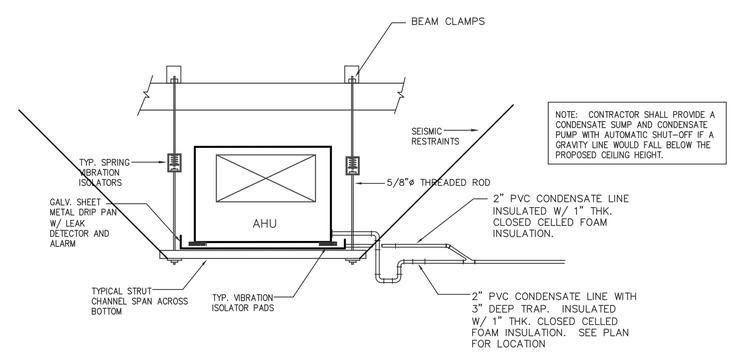

6 / M-8 AHU–3 AND AHU–4 SUPPORT DETAIL
SCALE: NONE

BID SET
11/1/16

THIS WORK WAS PREPARED BY ME OR UNDER MY SUPERVISION AND CONSTRUCTION WILL BE UNDER MY SUPERVISION OVERSIGHT PHASE OF CONSTRUCTION AS DEFINED IN SECTION 1-2 (N) OF THE RULES AND REGULATIONS OF THE BOARD OF PROFESSIONAL ENGINEERS, ARCHITECTS, SURVEYORS OF THE STATE OF HAWAII)

DOUGLAS L. GOMES * LICENSED PROFESSIONAL ENGINEER No. 3646-U HAWAII, U.S.A. *
04/30/2018

CHECKED BY: DLG
DRAWN BY: DYG
DESIGNED BY: DLG
DATE: JUNE 30, 2016
JOB NO. 013690

Note: Contractor shall check and verify all dimensions at job before proceeding with work.

SOUTH MAUI COMMUNITY PARK RECREATION CENTER
LILOA DRIVE
KIHEI, MAUI, HAWAII
TMK: (2) 2 - 2 - 26 - 03

REVISIONS			
No.	Date	Description	INI.

SHEET NO. M-8 OF ___ SHEETS

ENGINEERING DYNAMICS CORP. Civil & Mechanical Engineering Services Maui Office: 66 Wailani Street, Wailuku, Hawaii 96793 Phone: (808) 242-1644 Fax: (808) 242-0838

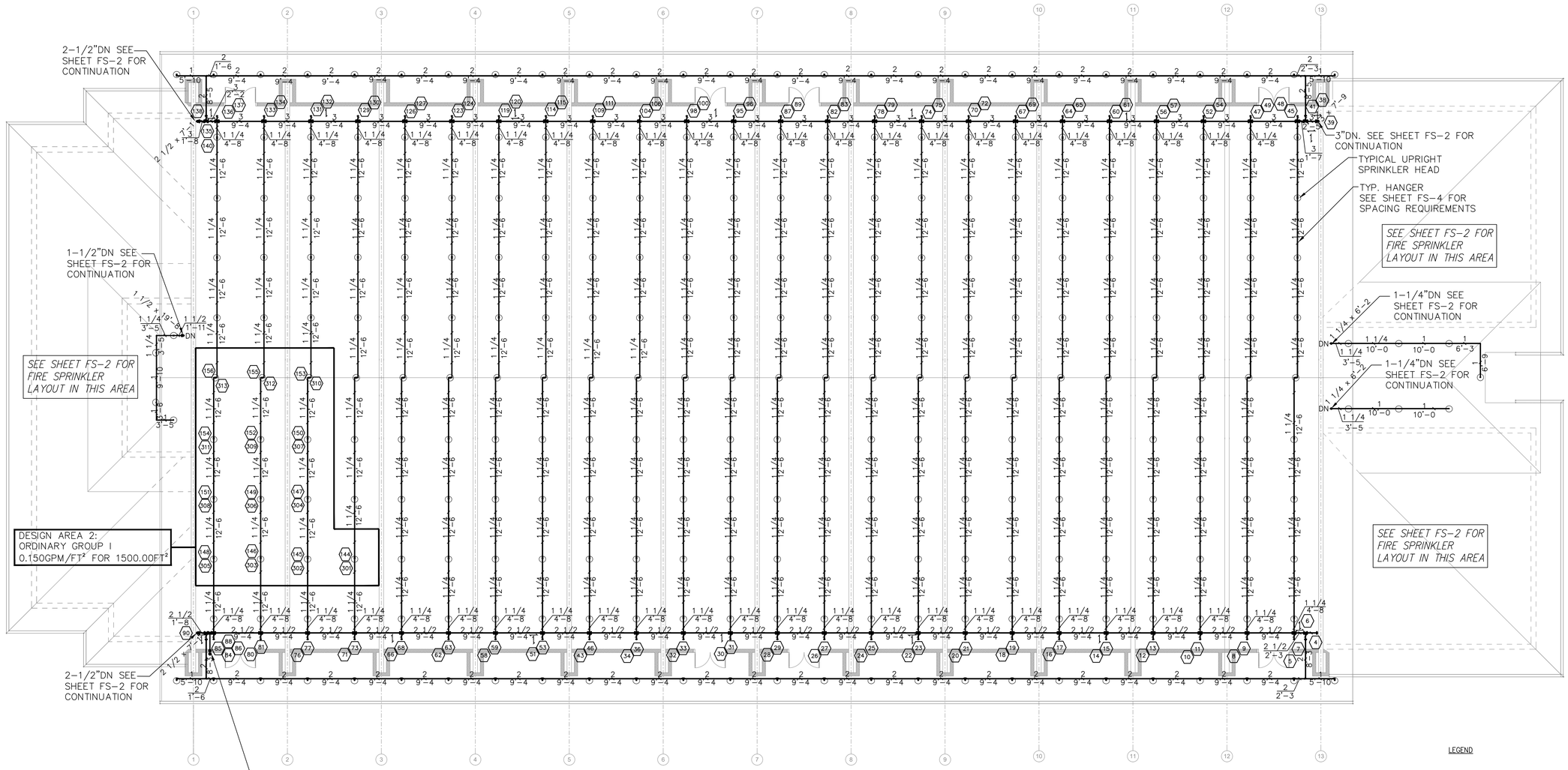

ROOF LEVEL FIRE SPRINKLER PLAN

SCALE: 3/32"=1'-0"

LEGEND

- TYPICAL LONGITUDINAL BRACING
- TYPICAL LATERAL BRACING
- (1) TYPICAL HYDRAULIC CALCULATION NODE TAG
- TYPICAL HANGER
- TYPICAL UPRIGHT SPRINKLER HEAD, ORDINARY TEMPERATURE, K-5.6 (PROVIDE INTERMEDIATE TEMPERATURE SPRINKLERS IN CONCEALED ATTIC SPACES)
- TYPICAL PENDANT SPRINKLER HEAD ORDINARY TEMPERATURE, K-5.6
- TYPICAL NEW FIRE SPRINKLER LINE

BID SET

THIS WORK WAS PREPARED BY ME OR UNDER MY SUPERVISION AND CONSISTS OF MY DESIGN, MY OBSERVATION, (OBSERVATION OF CONSTRUCTION AS DEFINED IN SECTION 16-115 OF THE RULES AND PROCEDURES OF THE BOARD OF PROFESSIONAL ENGINEERS, ARCHITECTS & SURVEYORS OF THE STATE OF HAWAII)

DOUGLAS L. GOMES LICENSED PROFESSIONAL ENGINEER No. 3546-H HAWAII, U.S.A.

APRIL 30, 2018

These Drawings are a instruments of service and shall not be used or copied without written permission from EDC.

CHECKED BY:	DLG
DRAWN BY:	IB
DESIGNED BY:	IB
DATE:	11/01/16
JOB NO.	13690

MAIN OFFICE -MAUI
900 EHA ST., STE 201
WAILUKU, HI 96793
Ph: 808 242-1644

OAHU OFFICE
126 QUEEN ST., STE 307A
HONOLULU, HI 96813
Ph: 808 523-8930

FIRE SPRINKLER PLAN
SOUTH MAUI COMMUNITY PARK RECREATION CENTER
LILO DRIVE, KIHEI, MAUI, HAWAII
TMK: (2) 3-4-024: 003

REVISIONS

No.	Date	Description	INI.
△			
△			
△			

SHEET NO.
FS-1
1 OF 4 SHEETS

ENGINEERING DYNAMICS CORP.
Civil & Mechanical Engineering Services

LEGEND

- TYPICAL LONGITUDINAL BRACING
- TYPICAL LATERAL BRACING
- (1) TYPICAL HYDRAULIC CALCULATION NODE TAG
- TYPICAL HANGER
- TYPICAL UPRIGHT SPRINKLER HEAD, ORDINARY TEMPERATURE, K-5.6 (PROVIDE INTERMEDIATE TEMPERATURE SPRINKLERS IN CONCEALED ATTIC SPACES)
- TYPICAL PENDANT SPRINKLER HEAD ORDINARY TEMPERATURE, K-5.6
- TYPICAL NEW FIRE SPRINKLER LINE

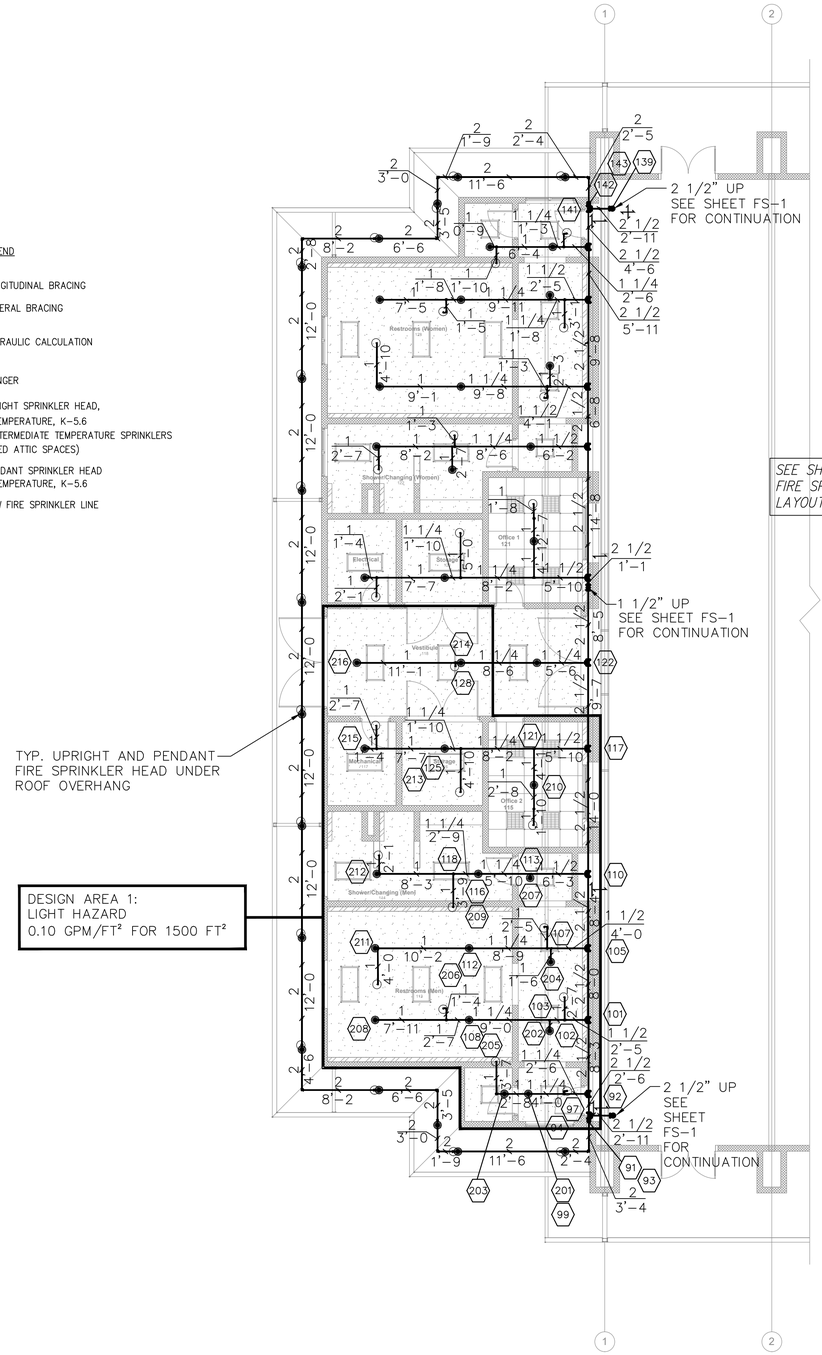

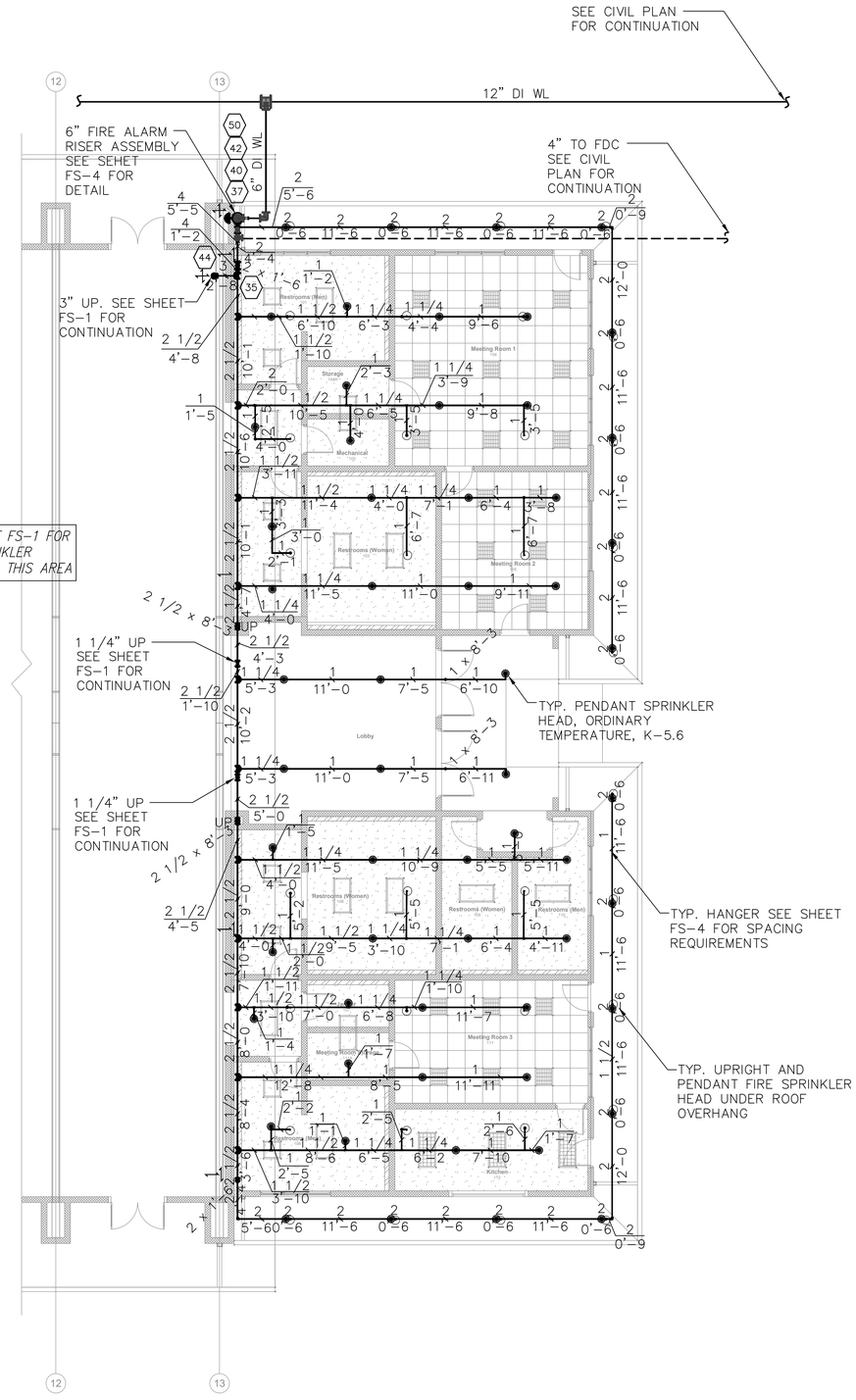

LOWER LEVEL FIRE SPRINKLER PLAN

SCALE: 1/8"=1'-0"

BID SET

THIS WORK WAS PREPARED BY ME OR UNDER MY SUPERVISION AND CONSTRUCTION WILL BE SUPERVISED AND OBSERVATION, OBSERVATION OF CONSTRUCTION AS DEFINED IN SECTION 16-115-2 OF THE RULES AND REGULATIONS OF THE BOARD OF PROFESSIONAL ENGINEERS, ARCHITECTS & SURVEYORS OF THE STATE OF HAWAII.

DOUGLAS L. GOMES, LICENSED PROFESSIONAL ENGINEER, No. 3646-U, HAWAII, U.S.A. APRIL 30, 2018

These Drawings are a instruments of service and shall not be used or copied without written permission from EDC.

CHECKED BY:	DLG
DRAWN BY:	IB
DESIGNED BY:	IB
DATE:	11/01/16
JOB NO.	13690

MAIN OFFICE –MAUI
900 EHA ST., STE 201
WAILUKU, HI 96793
Ph: 808 242-7644

OAHU OFFICE
126 QUEEN ST., STE. 307A
HONOLULU, HI 96813
Ph: 808 523-6930

FIRE SPRINKLER CEILING PLAN
SOUTH MAUI COMMUNITY PARK RECREATION CENTER
LILO DRIVE, KIHEI, MAUI, HAWAII
TMK: (2) 3-4-024:003

REVISIONS			
No.	Date	Description	INI.

SHEET NO. FS-2
2 OF 4 SHEETS

ENGINEERING DYNAMICS CORP.
Civil & Mechanical Engineering Services

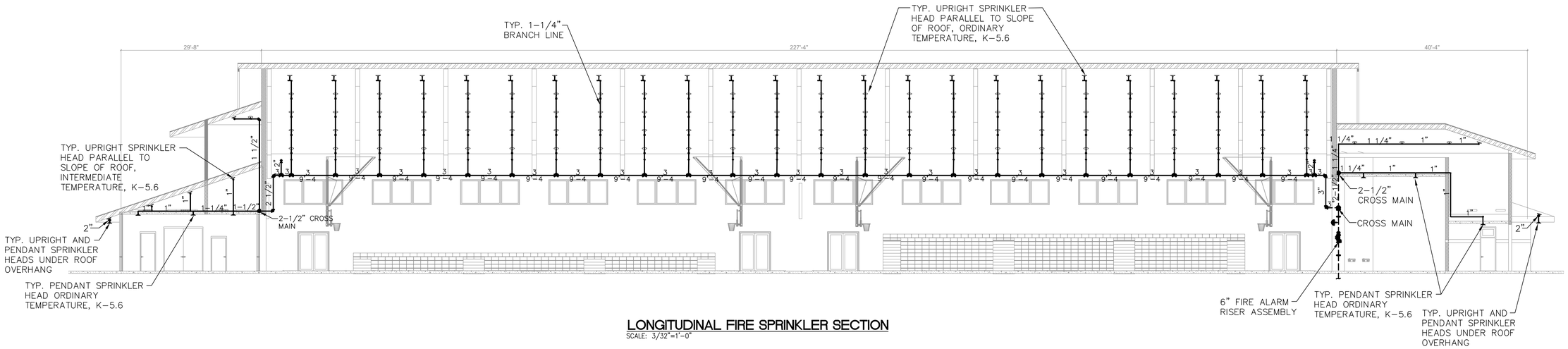

LONGITUDINAL FIRE SPRINKLER SECTION

SCALE: 3/32"=1'-0"

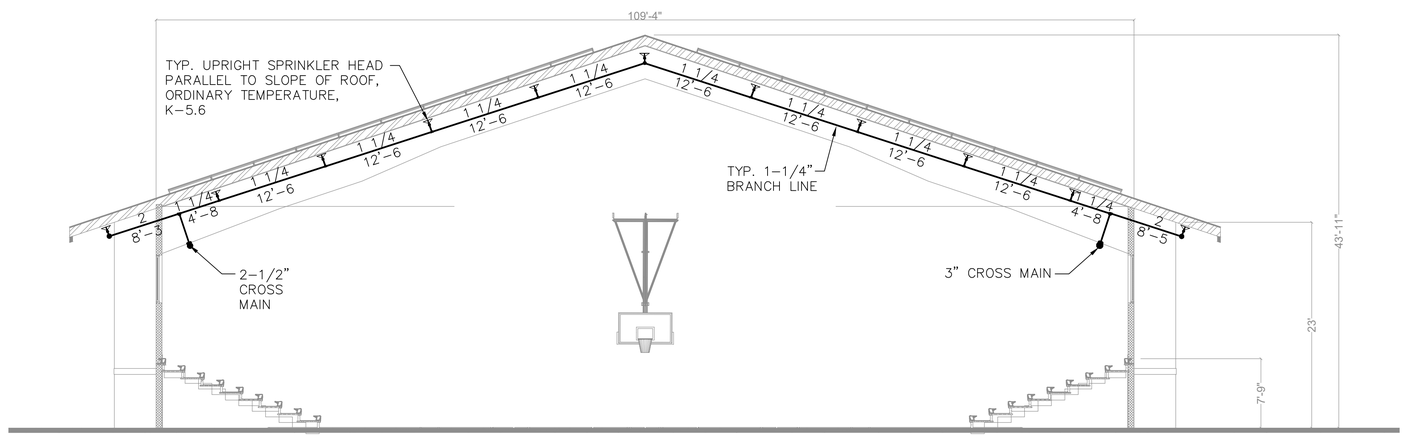

FIRE SPRINKLER SECTION

SCALE: 1/8"=1'-0"

BID SET

THIS WORK WAS PREPARED BY ME OR UNDER MY SUPERVISION AND CONSTRUCTION WILL BE UNDER MY OBSERVATION WHERE REQUIRED FOR CONSTRUCTION AS DEFINED IN SECTION 1-2 (N) OF THE RULES AND REGULATIONS OF THE BOARD OF PROFESSIONAL ENGINEERS, ARCHITECTS & SURVEYORS OF THE STATE OF HAWAII

DOUGLAS L. GOMES LICENSED PROFESSIONAL ENGINEER No. 3646-M HAWAII, U.S.A.

APRIL 30, 2018

These Drawings are a instruments of service and shall not be used or copied without written permission from EDC.

CHECKED BY: DLG
DRAWN BY: IB
DESIGNED BY: IB
DATE: 11/01/16
JOB NO. 13690

MAIN OFFICE -MAUI
900 EHA ST., STE 201
WAILUKU, HI 96793
Ph: 808 242-1644

OAHU OFFICE
126 QUEEN ST., STE 307A
HONOLULU, HI 96817
Ph: 808 523-6930

FIRE SPRINKLER BLDG. SECTIONS
SOUTH MAUI COMMUNITY PARK RECREATION CENTER
LILO DRIVE, KIHEI, MAUI, HAWAII
TMK: (2) 3-4-024: 003

REVISIONS			
No.	Date	Description	INI.
△			
△			
△			

SHEET NO.
FS-3
3 OF 4 SHEETS

ENGINEERING DYNAMICS CORP. Civil & Mechanical Engineering Services

CONSTRUCTION NOTES

1. PROJECT DESCRIPTION:
THIS PROJECT INVOLVES THE INSTALLATION OF FIRE PROTECTION FOR GYMNASIUM BUILDING, LOCATED AT SOUTH MAUI COMMUNITY PARK RECREATION CENTER. WORK INCLUDES THE INSTALLATION OF FIRE SPRINKLER HEADS, PIPES FITTINGS, AND FIRE ALARM RISER ASSEMBLY. SYSTEM SHALL BE FULLY OPERATIONAL WITH THE REQUIREMENTS SHOWN ON THE PLANS AND INSTALLED IN ACCORDANCE WITH MANUFACTURERS' REQUIREMENTS.

2. CONTRACTOR SHALL VSIT THE SITE, PRIOR TO BID, AND BECOME FAMILIAR WITH THE EXISTING CONDITIONS AND THE AMOUNT AND KIND OF WORK TO BE PERFORMED. EXISTING CONDITIONS ARE BASED ON BEST AVAILABLE INFORMATION GATHERED. CONTRACTOR SHALL VERIFY THE LOCATION, INVERT, SIZE, MATERIAL, AND CONDITION OF ALL EXISTING UTILITIES THAT WILL BE AFFECTED BY THE WORK. CONTRACTOR SHALL NOTIFY THE ENGINEER IMMEDIATELY IF ANY DISCREPANCIES ARE ENCOUNTERED, AND MAKE NECESSARY CHANGES AT NO ADDITIONAL COST TO THE OWNER. CONTRACTOR SHALL BE RESPONSIBLE FOR COMPLETE PROPERLY WORKING SYSTEMS(S) AS INDICATED ON THE PLANS.

3. FOR THE ACTUAL FABRICATION, INSTALLATION, AND TESTING OF WORK UNDER THIS SECTION, THE CONTRACTOR SHALL USE ONLY THOROUGHLY TRAINED AND EXPERIENCED WORKMEN, COMPLETELY FAMILIAR WITH THE ITEMS REQUIRED AND WITH THE MANUFACTURERS' RECOMMENDATIONS AS TO THEIR USE.

4. ALL WORK SHALL CONFORM TO THE LATEST APPLICABLE RULES, REGULATIONS, REQUIREMENTS AND SPECIFICATIONS OF THE LOCAL LAWS AND ORDINANCES, STATE AND FEDERAL LAWS, UNIFORM BUILDING CODE, UNIFORM PLUMBING CODE, UNIFORM MECHANICAL CODE, NATIONAL FIRE CODE, NATIONAL FIRE PROTECTION ASSOCIATION REQUIREMENTS, NATIONAL ELECTRIC CODE, COUNTY ELECTRICAL CODE, STATE FIRE MARSHAL, UNDERWRITER'S LABORATORY, NATIONAL ELECTRICAL SAFETY CODE, LIFE SAFETY CODE, AND ALL OTHER APPLICABLE CODES AND STANDARDS.

5. CONTRACTOR SHALL CALL TO THE ATTENTION OF THE ENGINEER, ARCHITECT, AND OWNER, IF ANY DISCREPANCIES ARE FOUND BEFORE BID. IF ANY DISCREPANCIES ARE FOUND AFTER BID, THE CONTRACTOR SHALL INSTALL THE SUPERIOR MATERIAL, OR SYSTEM, OR USE THE HIGHER STANDARD.

6. CONTRACTOR SHALL COMPLY WITH ALL UTILITY COMPANIES' STANDARD AND REQUIREMENTS TO OBTAIN UTILITY APPROVAL AND SERVICE. CONTRACTOR SHALL COORDINATE TRADES TO DETERMINE PAYMENT FOR ALL UTILITY CHARGES, PRIOR TO ANY WORK.

7. CONTRACTOR SHALL OBTAIN ALL NECESSARY PERMITS AND PAY ALL APPLICABLE FEES PRIOR TO COMMENCING ANY WORK. CONTRACTOR SHALL ARRANGE FOR PERIODIC INSPECTION BY LOCAL AND STATE AUTHORITIES, AS WORK PROGRESSES.

8. CONTRACTOR SHALL PROVIDE, INSTALL AND MAINTAIN ALL NECESSARY SIGNS, LIGHTS, FLARES, BARRICADES, AND OTHER PROTECTIVE DEVICES FOR THE PROTECTION, SAFETY AND CONVENIENCE OF THE PUBLIC.

9. CONTRACTOR SHALL PROVIDE PROTECTION FOR MATERIAL AND EQUIPMENT FROM LOSS, DAMAGE, CORROSION, AND EFFECTS OF MOISTURE, CONTRACTOR SHALL REPAIR OR REPLACE DAMAGED ITEMS AT NO ADDITIONAL COST TO THE OWNER.

10. CONTRACTOR SHALL PROVIDE ONE (1) REPRODUCIBLE SET OF FABRICATION AND SHOP DRAWINGS FOR REVIEW BY THE ENGINEER PRIOR TO COMMENCING OF ANY WORK. THE FABRICATION DRAWINGS SHALL BE A MINIMUM OF 1/8" SCALE AND DRAWN ON A 24"x36" SHEET. 1/4" AND 1/2" SCALE WILL BE REQUIRED FOR DETAILS AND AREAS WHERE 1/8" SCALE IS TOO SMALL. SHOP DRAWINGS SHALL INCLUDE INFORMATION ON ALL MATERIALS AND EQUIPMENT. AFTER REVIEW BY THE ENGINEER, AND ALL CORRECTIONS HAVE BEEN MADE, THE CONTRACTOR SHALL MAKE COPIES FOR DISTRIBUTION TO THE ARCHITECT, OWNER, AND ENGINEER. ALL WORK DONE WITHOUT FINAL REVIEW BY THE ENGINEER SHALL BE SUBJECT TO REPAIR OR REPLACEMENT AT NO ADDITIONAL COST TO THE OWNER.

11. MATERIALS: CONTRACTOR SHALL PROVIDE ALL FIRST QUALITY, NEW MATERIALS, FREE FROM DEFECTS, SUITABLE FOR SPACE PROVIDED, AND APPROVED BY UL, WHEREVER STANDARD HAVE BEEN PROVIDED BY THAT AGENCY. PROVIDE PRODUCTS OF A SINGLE MANUFACTURER WHERE TWO OR MORE UNITS OF THE SAME CLASS ARE REQUIRED. MANUFACTURERS LISTED SHOW STYLE AND QUALITY. EQUIVALENT FIXTURES MAY BE SUBSTITUTED WITH ACCEPTANCE OF THE ENGINEER, ARCHITECT, AND THE OWNER. MATERIALS AND WORKMANSHIP SUBJECT TO INSPECTION AT ANY TIME BY OWNER OR OWNER'S REPRESENTATIVES. CONTRACTOR SHALL CORRECT ANY WORK OR MATERIALS NOT IN ACCORDANCE WITH DRAWINGS OR FOUND TO BE DEFICIENT OR DEFECTIVE IN A MANNER SATISFACTORY TO OWNER AT NO ADDITIONAL COST TO THE OWNER.

12. FIRE SPRINKLER: THE FIRE SPRINKLER WORK SHALL BE DONE BY A LICENSED FIRE SPRINKLER CONTRACTOR. THE FIRE SPRINKLER LAYOUT SHOWS THE APPROXIMATE LOCATION OF THE FIRE SPRINKLER LINES AND HEADS. SPRINKLER LINES AND HEADS SHALL BE ADJUSTED TO AVOID BEAMS, COLUMNS, LIGHT FIXTURES, ETC., PER NFPA-13.

   A. SYSTEM DESCRIPTION: COMPLETE WET-PIPE AND DRY TYPE AUTOMATIC FIRE SPRINKLER SYSTEM WITH LOCAL ALARM AND REMORE ALARM.

   B. CODES & STANDARDS: NFPA 13

   C. SYSTEM DESIGN BASIS: GYMNASIUM AREA:
   ORDINARY GROUP I, 0.15 GPM/SF PER 1500 SF, 130 SF MAX. COVERAGE PER HEAD. MAX. STORAGE HEIGHT 12 FT.

   OTHER AREAS:
   LIGHT HAZARD, 0.10 GPM/SF PER 1500 SF, 225 SF MAX. COVERAGE PER HEAD.

   D. SPRINKLER HEADS: TYCO, VIKING, RELIABLE OR APPROVED EQUAL. QUICK RESPONSE, ORDINARY TEMPERATURE, 5.6 K FACTOR HEADS. SPRINKLERS IN ENCLOSED ATTIC AREAS SHALL BE INTERMEDIATE TEMPERATURE, QUICK RESPONSE. SPRINKLER HEADS PROTECTING THE SAME HAZARD SHALL BE THE SAME MAKE AND MODEL. SEE LEGEND FOR DIFFERENT TYPE SPRINKLERS.

   E. PIPE 2" AND LARGER SHALL BE ROLLED GROOVED SCHEDULE 10 BLACK STEEL PIPE. PIPE 1-1/2" AND SMALLER SHALL BE THREADED PIPE SCHEDULE 40 BLACK STEEL PIPE.
   ALL DRAINS AND EXTERIOR PIPING SHALL BE PAINTED GALVANIZED (HOT DIPPED ZINC COATED) STEEL.

   F. CONTRACTOR SHALL CLEAN, PRIME AND PAINT ALL EXPOSED PIPES. COORDINATE COLOR WITH ARCHITECT.

13. CONTRACTOR SHALL PROVIDE AS-BUILT DRAWINGS UPON COMPLETION AND ACCEPTANCE OF THE WORK.

14. CONTRACTOR SHALL PROVIDE A WRITTEN GUARANTEE TO REPAIR OR REPLACE AT HIS OWN EXPENSE ANY PARTS THAT MAY DEVELOP ANY DEFECTS DUE TO FAULTY MATERIALS OR WORKMANSHIP FOR A PERIOD OF ONE (1) YEAR AFTER FINAL PAYMENT.

LEGEND

- TYPICAL LONGITUDINAL BRACING
- TYPICAL LATERAL BRACING
- (1) TYPICAL HYDRAULIC CALCULATION NODE TAG
- TYPICAL HANGER
- TYPICAL UPRIGHT SPRINKLER HEAD, ORDINARY TEMPERATURE, K-5.6 (PROVIDE INTERMEDIATE TEMPERATURE SPRINKLERS IN CONCEALED ATTIC SPACES)
- TYPICAL PENDANT SPRINKLER HEAD ORDINARY TEMPERATURE, K-5.6
- TYPICAL NEW FIRE SPRINKLER LINE

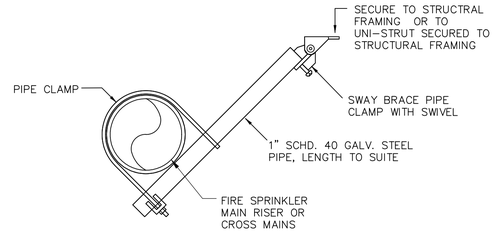

LATERAL BRACING DETAIL
NOT TO SCALE

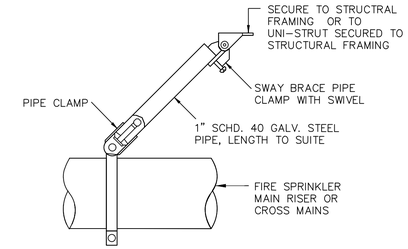

LONGITUDINAL BRACING DETAIL
NOT TO SCALE

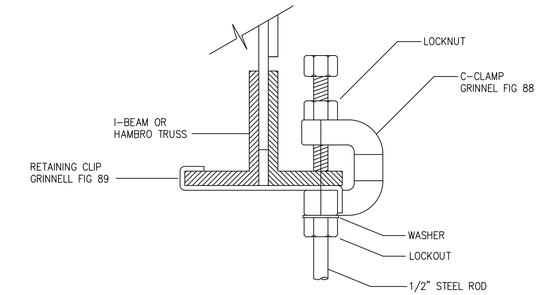

BEAM C-LAMP DETAIL
NOT TO SCALE

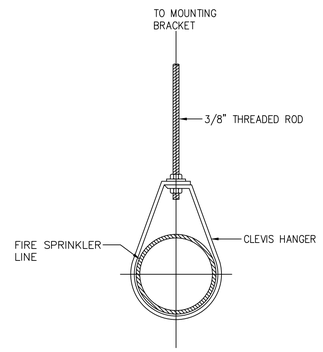

PIPE HANGER DETAIL
NOT TO SCALE

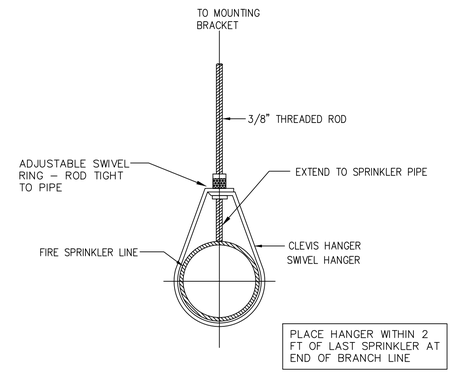

PIPE HANGER FOR END OF BRANCH LINE DETAIL
NOT TO SCALE

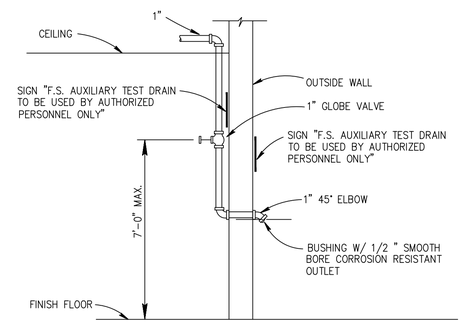

FIRE SPRINKLER TEST AND DRAIN
NOT TO SCALE

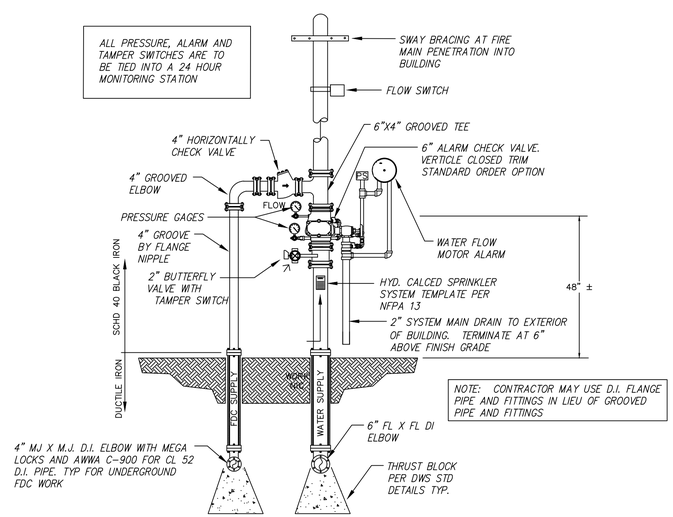

MAXIMUM HANGER SPACING			
PIPE SIZE	COPPER	BLACK STEEL, SCH. 40	STEEL, SCH. 10
1"ø	8'-0"	12'-0"	
1.1/4"ø TO 1.1/2"ø	10'-0"	12'-0"	
2"ø	12'-0"	15'-0"	
2.1/2"ø TO 3"ø	12'-0"	15'-0"	15'-0"
3.1/2"ø TO 8"ø	15'-0"	15'-0"	15'-0"

BID SET

THIS WORK WAS PREPARED BY ME OR UNDER MY SUPERVISION AND CONSTRUCTION WILL BE UNDER MY OBSERVATION. (OBSERVATION OF CONSTRUCTION AS DEFINED IN SECTION 16-115-2 OF THE RULES AND REGULATIONS OF THE BOARD OF PROFESSIONAL ENGINEERS, ARCHITECTS & ARCHITECTS OF THE STATE OF HAWAII)
DOUGLAS L. GOMES LICENSED PROFESSIONAL ENGINEER No. 3646-U HAWAII, U.S.A. APRIL 30, 2018
These Drawings are a instruments of service and shall not be used or copied without written permission from EDC.

CHECKED BY: DLG
DRAWN BY: IB
DESIGNED BY: IB
DATE: 11/01/16
JOB NO. 13690
MAIN OFFICE -MAUI
900 EHA ST., STE 201
WAILUKU, HI 96793
Ph: 808 242-7644
OAHU OFFICE
126 QUEEN ST., STE 307A
HONOLULU, HI 96813
Ph: 808 523-6930

FIRE SPRINKLER NOTES & DETAILS
SOUTH MAUI COMMUNITY PARK RECREATION CENTER
LILO DRIVE, KIHEI, MAUI, HAWAII
TMK: (2) 3-4-024:003

REVISIONS

No.	Date	Description	INI.

SHEET NO. FS-4
4 OF 4 SHEETS

ENGINEERING DYNAMICS CORP.
Civil & Mechanical Engineering Services

GENERAL NOTES

1. COMPLY WITH THE LATEST APPLICABLE RULES, REGULATIONS, REQUIREMENTS, AND SPECIFICATIONS OF THE LOCAL LAWS AND ORDINANCES, STATE AND FEDERAL LAWS, NATIONAL ELECTRICAL CODE, COUNTY OF MAUI ELECTRICAL CODE, STATE FIRE MARSHAL, UNDERWRITER'S LABORATORY, NATIONAL ELECTRICAL SAFETY CODE, LIFE SAFETY CODE.
2. CONTRACTOR TO OBTAIN AND PAY THE ELECTRICAL PERMIT AS REQUIRED BY LOCAL ORDINANCES AND ARRANGE FOR PERIODIC INSPECTION BY LOCAL AUTHORITIES AS WORK PROGRESSES.
3. PROVIDE PROTECTION FOR MATERIAL AND EQUIPMENT FROM LOSS, DAMAGE, CORROSION, AND EFFECTS OF MOISTURE. REPAIR OR REPLACE DAMAGED ITEMS AT NO ADDITIONAL COST TO THE OWNER.
4. VISIT PROJECT SITE PRIOR TO BID SUBMITTAL TO ASCERTAIN CONDITIONS AND COST ALLOWANCES THAT AFFECT THE PROPOSED WORK.
5. CHECK THE APPROXIMATE LOCATIONS OF WIRING DEVICES AND ELECTRICAL EQUIPMENT FOR CONFLICTS WITH STRUCTURAL MEMBERS, OTHER SYSTEM COMPONENTS, AND FIXED EQUIPMENT. CONSULT ENGINEER IN EVENTS OF CONFLICTS AND MAKE NECESSARY CHANGES AT NO ADDITIONAL COST TO THE OWNER.
6. INSTALL MATERIALS AND EQUIPMENT IN A WORKMANLIKE MANNER AND IN STRICT ACCORDANCE WITH MANUFACTURER'S RECOMMENDATIONS, UNLESS OTHERWISE SPECIFIED OR DIRECTED BY ENGINEER. CONTRACTOR SHALL UPDATE THE PANEL SCHEDULE FOR ANY PANEL REVISED DURING THIS WORK.
7. CONTRACTOR TO COMPLY WITH ALL MECO AND HTCO STANDARDS AND REQUIREMENTS TO OBTAIN ELECTRICAL AND TELEPHONE SERVICES. OWNER SHALL PAY FOR ALL MECO AND HTCO CHARGES.
8. MATERIALS AND WORKMANSHIP SUBJECT TO INSPECTION AT ANY TIME BY OWNER OR HIS REPRESENTATIVES. CORRECT ANY WORK OR MATERIALS NOT IN ACCORDANCE WITH DRAWINGS OR FOUND TO BE DEFICIENT OR DEFICIENT OR DEFECTIVE IN A MANNER SATISFACTORY TO OWNER AT NO ADDITIONAL COST.
9. PROVIDE ALL FIRST QUALITY, NEW MATERIALS, FREE FROM DEFECTS, SUITABLE FOR SPACE PROVIDED, AND APPROVED BY UL WHEREVER STANDARD HAVE BEEN PROVIDED BY THAT AGENCY.
10. PROVIDE STANDARD MATERIALS AND EQUIPMENT OF MANUFACTURERS REGULARLY ENGAGED IN THE PRODUCTION OF THESE PRODUCTS. PROVIDE PRODUCTS OF A SINGLE MANUFACTURER WHERE TWO OR MORE UNITS OF THE SAME CLASS ARE REQUIRED.
11. ALL WIRING TO BE TYPE THWN/THHN COPPER, UNLESS NOTED OTHERWISE. #12 AWG MINIMUM. ALL WIRING SHALL BE IN CONDUIT, 1/2" MIN.
12. CONTRACTOR SHALL UPDATE THE PANEL SCHEDULE FOR ANY PANEL REVISED DURING THIS WORK.
13. CONTRACTOR TO INSTALL COMPLETE DATA JACKS W/ CONDUIT & PULLWIRE. VERIFY REQUIREMENTS IN FIELD. JACKS: CATEGORY 5e T568A, 8 CONDUCTOR, (RJ45)
14. TELEPHONE SYSTEM: INSTALL CAT 5e (RJ45) JACK W/ CONDUIT & PULLWIRE
15. SEE ARCHITECTURAL DRAWINGS FOR ANY DIMENSIONS, ELEVATIONS, AND BUILDING DETAILS. VERIFY LOCATION OF ALL WALL OUTLETS, SWITCHES, ETC., WITH ARCHITECTURAL DRAWINGS AND ACTUAL CONDITIONS.
16. PRIOR TO ROUGH-IN AND FINAL CONNECTION, VERIFY ELECTRICAL CHARACTERISTICS AND EXACT LOCATION OF EQUIPMENT. THIS VERIFICATION SHALL BE DONE THROUGH THE ARCHITECT.
17. SEE MECHANICAL DRAWINGS FOR ELECTRICAL REQUIREMENTS OF ALL MECHANICAL EQUIPMENT, FOR WIRING AND CONTROL DIAGRAMS, AND FOR EXACT LOCATION OF EQUIPMENT.
18. COORDINATE SCHEDULE OF CONSTRUCTION WITH THE OWNER, OTHER TRADES AND UTILITIES INVOLVED BEFORE INSTALLATION OF UNDERGROUND FEEDERS, TRENCHING, ETC.
19. GROUT AND SEAL ALL CONDUIT PENETRATIONS OF WALLS AND FLOOR SLABS TO PRESERVE FIRE RATING AND WATERTIGHT INTEGRITY. (WHERE NECESSARY)
20. ALL SPECIAL SYSTEMS WIRING, CONDUIT AND ROUGH-IN REQUIREMENTS SHALL BE VERIFIED WITH THE EQUIPMENT AND SYSTEMS MANUFACTURER/SUPPLIER.
21. COORDINATE BREAKER OR FUSE SIZES WITH EQUIPMENT PROVIDED.
22. ALL PENETRATIONS OF FIRE-RESISTIVE FLOORS OR WALLS SHALL BE PROTECTED BY MATERIALS AND INSTALLATION DETAILS THAT CONFORM TO UNDERWRITERS LABORATORIES LISTINGS FOR "THROUGH-PENETRATION FIRE STOP SYSTEMS."
23. THE CONTRACTOR SHALL EMPLOY QUALIFIED AND EXPERIENCED WORKMEN FOR THIS WORK. ALL RESTORATION WORK SHALL BE SUBJECT TO THE APPROVAL OF THE ARCHITECT AND/OR THE OWNER.
24. EXAMINE ARCHITECTURAL, STRUCTURAL AND MECHANICAL DRAWINGS AND SPECIFICATIONS TO DETERMINE THE SEQUENCE OF CONSTRUCTION THROUGHOUT THE PROJECT, INCLUDING EXISTING, TEMPORARY, REMODELED AND NEW AREAS.
25. CONTRACTOR SHALL SUBMIT AN AS-BUILT DRAWING TO OWNER AT COMPLETION OF PROJECT AS-BUILT DRAWINGS REFER TO DOCUMENTS MAINTAINED AND ANNOTATED BY CONTRACTOR DURING CONSTRUCTION AND INCLUDE RECORD DRAWINGS IN ACCORDANCE WITH CHANGES AND NEW INFORMATION FOR SCHEDULES, LISTS, AND DRAWINGS.
26. ELECTRICAL IDENTIFICATION: ALL SAFETY SWITCHES, PANELS, STAND ALONE CIRCUIT BREAKERS, SWITCHBANKS, AND ALL SWITCHES AT THE SWITCHBANKS SHALL BE IDENTIFIED BY AN ATTACHED NAMEPLATE. NAMEPLATES FOR INDIVIDUAL SAFETY SWITCHES AND CIRCUIT BREAKERS SHALL IDENTIFY CIRCUIT AND PANEL. NAMEPLATES FOR PANELS SHALL IDENTIFY PANEL NAME. NAMEPLATES FOR LIGHT/FAN SWITCHES SHALL IDENTIFY SWITCHING CIRCUIT.
    1. NAMEPLATES: ENGRAVED THREE LAYER LAMINATED PLASTIC, BLACK, WHITE LETTERS ON A BLACK BACKGROUND. 1/8" LETTERING FOR SWITCHES. 1/4" LETTERING FOR PANELS.
    2. DEGREASE AND CLEAN SURFACES TO RECEIVE NAMEPLATES
    3. INSTALL NAMEPLATE PARALLEL TO EQUIPMENT LINES.
    4. SECURE NAMEPLATES TO EQUIPMENT WITH SCREWS OR ADHESIVE.
    5. EMBOSSED TAPE WILL NOT BE PERMITTED FOR ANY APPLICATION.

THIS DRAWING IS AN "INSTRUMENT OF SERVICE" BY ECM INC. THIS WORK IS A PART OF AN INTEGRATED PROCESS OF TECHNICAL DESIGN. USE OUTSIDE THIS PROCESS IS INAPPROPRIATE AND TRANSFER OF ITS OBSERVATIONS, CONCLUSIONS, OR METHODOLOGY TO ANY OTHER WORK MAY HAVE SERIOUS CONSEQUENCES.

INTERIOR LIGHTING POWER ALLOWANCE

BUILDING TYPE	AREA	DENSITY	ALLOWANCE	ACTUAL
GYMNASIUM	32,184 SQ FT	1.1 W/SQ FT	35,413 W	25,000 W
TOTAL TRADABLE			35,413 W	25,000 W

EXTERIOR LIGHTING POWER ALLOWANCE

TRADABLE APPLICATION	AREA/LENGTH	DENSITY	ALLOWANCE	ACTUAL
PARKING LOT	59,200 SQ FT	0.15 W/SQ FT	8,880 W	
BUILDING ENTRANCE – MAIN DOORS	12 FT	30 W/FT	360 W	
BUILDING ENTRANCE – OTHER DOORS	72 FT	20 W/FT	1,440 W	
WALKWAY	1,600 FT	1.0 W/FT	1,600 W	
TOTAL TRADABLE			12,280 W	7,500 W

HANDHOLE SCHEDULE

HHG#	MECO	TEL	CATV
4A	E4	T3	C2
4B	E4	T3	C2

CONDUIT SCHEDULE

SECTION	ELEC (MECO)	LIGHTING	TEL	CATV
A	2-4"C		2"C	2"C
B	2-4"C		2"C	2"C
C		3/4"C		

E4 ELECTRICAL 4'X6' HANDHOLE, MECO DWG. 18842
T3 TELEPHONE PULLBOX, TYPE 180045 (3'X5') HAWAIIAN TELCOM DWG. 34110A
C2 CATV PULLBOX, SIMILAR TO HAWAIIAN TELCOM TYPE 435TB, HAWAIIAN TELCOM DWG. 34056

COUNTY OF MAUI
MAUI COUNTY CODE, CHAPTER 16.16A ENERGY CODE

TO THE BEST OF MY KNOWLEDGE, THIS PROJECT'S DESIGN SUBSTANTIALLY CONFORMS TO THE ENERGY CODE FOR:

____ BUILDING COMPONENT SYSTEMS
__X__ ELECTRICAL COMPONENT SYSTEMS
____ MECHANICAL COMPONENT SYSTEMS

SIGNATURE: _____ DATE: 4-1-16
NAME: JERAL M FUKUDA
TITLE: PROJECT ENGINEER
LICENSE NO.: 10378-E

MAUI COUNTY CODE CHAPTER 20.35
OUTDOOR LIGHTING

THE ELECTRICAL OUTDOOR LIGHTING SYSTEM AND EQUIPMENT HAVE BEEN REVIEWED BY ME AN TO THE BEST OF MY KNOWLEDGE, THIS DESIGN SUBSTANTIALLY CONFORMS TO THE REQUIREMENTS SPECIFIED IN MAUI COUNTY CODE CHAPTER 20.35 OUTDOOR LIGHTING.

SIGNATURE	PROJECT ENGINEER TITLE
JERAL M FUKUDA NAME (PRINT)	10378-E STATE OF HAWAII P.E. LICENSE NUMBER

SYMBOL LEGEND

- DUCT LINE
- STUB-OUT CONDUIT, CAP, AND CONCRETE MARKER
- PARKING LIGHT POLE, TYPE I
- AREA LIGHT POLE, TYPE J
- NEW HANDHOLE GROUP
- LIGHTING PULLBOX 13"X24"
- TRANSFORMER PAD
- BRANCH CIRCUITS CONCEALED IN CEILING OR WALL, 2 NO. 12 WIRES UNLESS OTHERWISE NOTED. HASH MARKS INDICATE NUMBER OF WIRES WHEN MORE THAN TWO.
- BRANCH CIRCUITS AS ABOVE CONCEALED IN FLOOR OR GROUND
- BRANCH CIRCUITS AS ABOVE EXPOSED
- JUNCTION BOX
- DUPLEX CONVENIENCE OUTLET, 2P, 3W GROUNDING TYPE. +18"
- DUPLEX CONVENIENCE OUTLET, 2P, 3W GROUNDING TYPE, MOUNTED ABOVE COUNTER
- TELEPHONE OUTLET (RJ45) +18", 3/4"C TO ITSD EQUIPMENT
- DATA OUTLET, 3/4"C W/CAT 5e TO ITSD EQUIPMENT
- SCOREBOARD JACK
- M — MICROPHONE JACK CLUSTER (2-MIC & 1 AUX CONNECTION)
- $ — WALL SWITCH, SINGLE-POLE +48" TO TOP OF COVER PLATE
- $D — WALL SWITCH, DIMMABLE SLIDER TYPE +48" TO TOP OF COVER PLATE
- $3 — WALL SWITCH, THREE-WAY (4 = 4 WAY) +48" TO TOP OF COVER PLATE
- DISTRIBUTION PANEL
- DISCONNECT SWITCH, HP RATED.
- GFCI — DENOTES A GROUND FAULT CIRCUIT INTERRUPTER DEVICE
- +18" — INDICATES MOUNTING HEIGHT OF DEVICE ABOVE FINISHED FLOOR/GRADE
- WP — DENOTES WATERPROOF DEVICE, NOT "WHILE-IN-USE" TYPE UNLESS INDICATED
- FIRE ALARM COMBINATION HORN/STROBE, +80"
- F — FIRE ALARM MANUAL PULL STATION, WALL MOUNTED, +48"
- FIRE ALARM CONTROL PANEL
- DS — FIRE ALARM DETECTOR, SMOKE TYPE, CEILING MOUNTED
- FIRE ALARM VISUAL INDICATOR, WALL MOUNTED, +80"
- ANN — FIRE ALARM REMOTE ANNUNCIATOR
- MF — FIRE ALARM MICROPHONE ASSEMBLY
- FS — FIRE ALARM FLOW SWITCH
- TS — FIRE ALARM TAMPER SWITCH

NOTE ON SYMBOLS:
MOUNTING ELEVATIONS ARE AS NOTED ABOVE.
ELEVATIONS PROVIDED ON PLANS TAKE PRECEDENCE.

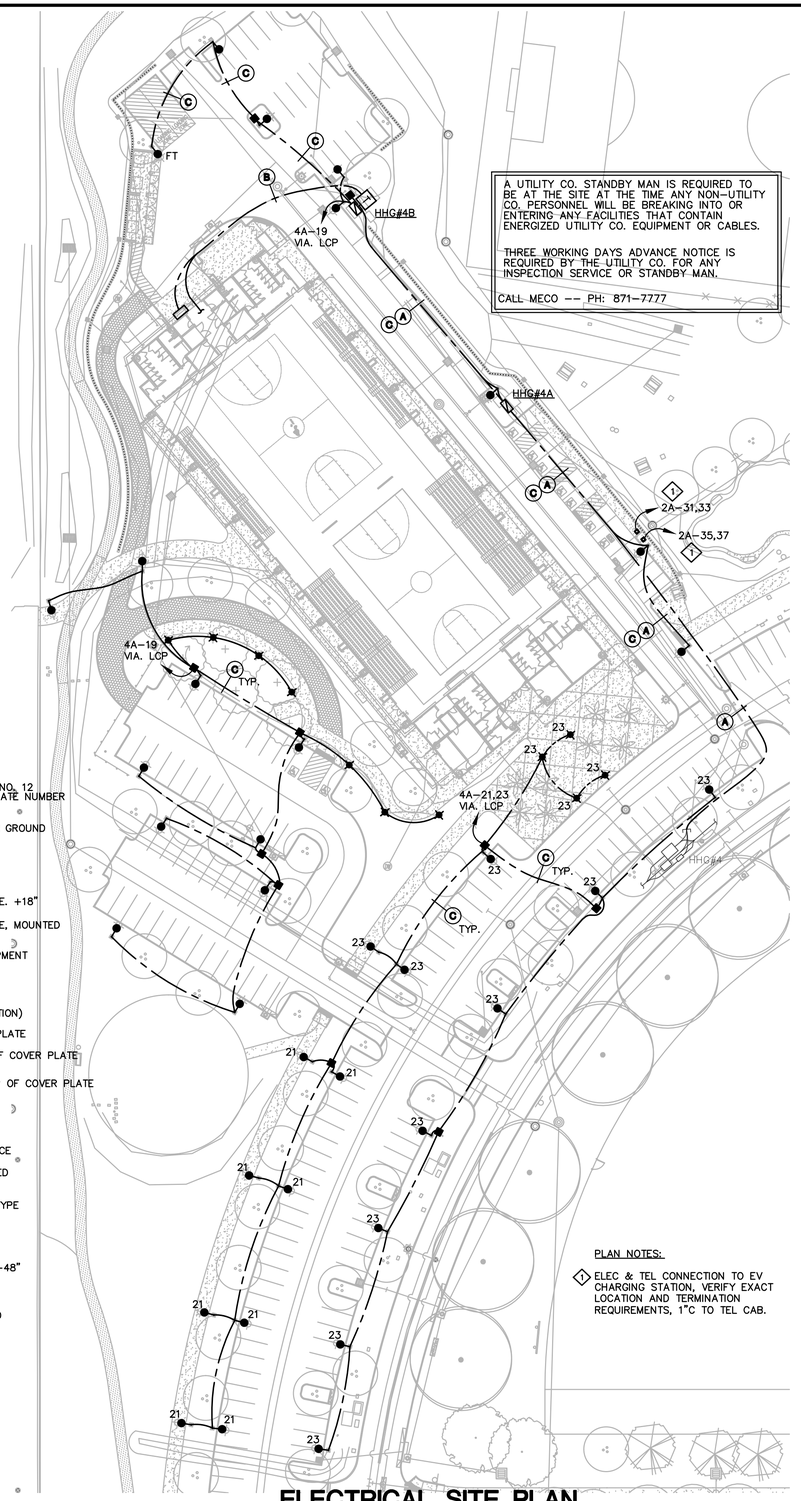

A UTILITY CO. STANDBY MAN IS REQUIRED TO BE AT THE SITE AT THE TIME ANY NON-UTILITY CO. PERSONNEL WILL BE BREAKING INTO OR ENTERING ANY FACILITIES THAT CONTAIN ENERGIZED UTILITY CO. EQUIPMENT OR CABLES.

THREE WORKING DAYS ADVANCE NOTICE IS REQUIRED BY THE UTILITY CO. FOR ANY INSPECTION SERVICE OR STANDBY MAN.

CALL MECO -- PH: 871-7777

PLAN NOTES:

1. ELEC & TEL CONNECTION TO EV CHARGING STATION, VERIFY EXACT LOCATION AND TERMINATION REQUIREMENTS, 1"C TO TEL CAB.

ELECTRICAL SITE PLAN

SCALE: 1" = 40'-0"

BID SET

ECM INC.
Electrical Engineering Consultants
MAUI OFFICE
150 North Market Street
Wailuku, Maui, HI. 96793
Phone: (808)242-2070
Fax: (808)244-9639
E-mail: ecm@ecm-maui.com

JERAL M. FUKUDA
LICENSED PROFESSIONAL ENGINEER
No. 10378-E
HAWAII, U.S.A.

APRIL 30, 2018
EXPIRATION DATE

THIS WORK WAS PREPARED BY ME OR UNDER MY SUPERVISION AND CONSTRUCTION OF THIS PROJECT WILL BE UNDER MY OBSERVATION. (SUPERVISION OF CONSTRUCTION AS DEFINED UNDER SECTION 16-82-2 OF CHAPTER 82; RULES OF THE BOARD OF PROFESSIONAL ENGINEERS, ARCHITECTS AND LAND SURVEYORS; STATE OF HAWAII.)

Note: Contractor shall check and verify all dimensions at job before proceeding with work.

REVISIONS

NO	DATE	DESCRIPTION	INI

JOB NO. 2014-81
DATE: 11/01/16
DRAWN BY: RMB
DESIGNED BY: JMF
CHECKED BY: JMF

ELECTRICAL PLANS FOR:
SOUTH MAUI COMMUNITY PARK
KIHEI, MAUI, HI
TMK: (2) 2-2-002:042

SHEET NO.
E-1
1 OF – SHEETS

2014-81-E1

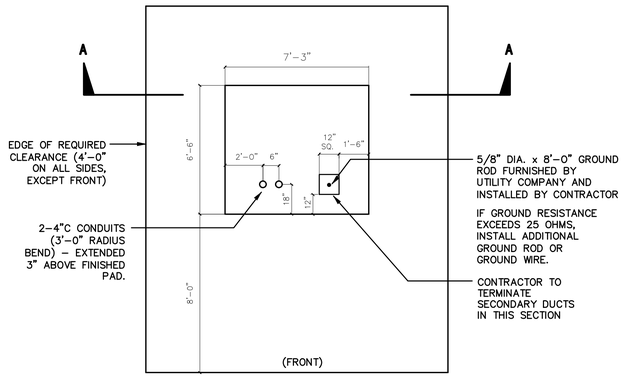

PLAN VIEW

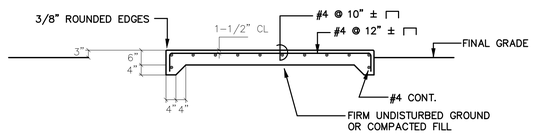

SECTION "A-A"

THREE PHASE TRANSFORMER PAD DETAIL

NOT TO SCALE

CONTRACTOR NOTES:

1. THE CONTRACTOR IS TO FURNISH MATERIALS AND CONSTRUCT THE FACILITIES FOR THE PADMOUNT TRANSFORMER INCLUDING THE CONCRETE PAD. PRIMARY AND SECONDARY DUCTS AND ANCHOR BOLTS. CONCRETE CURB AND ROCK FILL AROUND THE PAD, WHEN REQUIRED, SHALL ALSO BE FURNISHED AND INSTALLED BY THE CONTRACTOR.
2. MECO SHALL HAVE 24-HOUR ACCESS TO THE TRANSFORMER WITHOUT GOING THROUGH LOCKED AREAS.
3. MECO SHALL HAVE A MINIMUM OF 10 FEET WIDE VEHICULAR ACCESS TO THE TRANSFORMER INSTALLATION.
4. BENDS DUE TO CHANGES OF GRADE ARE TO HAVE MINIMUM RADIUS OF 20 FEET. THE DUCT IS TO BE PVC SCHEDULE 40 PIPE. THE CONTRACTOR IS TO INSTALL DUCT FROM THE PAD TO THE RISER POLE OR HANDHOLE AS DESIGNATED ON THE PLAN.
5. ONE COPPER WELD GROUND ROD 5/8 INCH DIAM. X 8 FEET LONG IS TO BE PROVIDED AND INSTALLED BY THE CONTRACTOR. THE ROD IS TO EXTEND 6 INCHES ABOVE THE FINISHED PAD. TIE THE ROD TO A WATER PIPE WITH #1/0 COPPER WIRE. THIS TIE MAY BE ELIMINATED WHERE THE WATER PIPE IS MORE THAN 25 FEET AWAY.
6. NO PERMANENT OR TEMPORARY STRUCTURE OR OBJECT SHALL BE ERECTED OR PLACED WITHIN FOUR FEET OF THE EDGE OF THE CONCRETE TRANSFORMER PAD AND 8 FEET IN FRONT, UNLESS APPROVED BY MECO.
7. WHEN THE CONCRETE PAD IS LOCATED IN THE VICINITY OF EXISTING OR FUTURE COMBUSTIBLE MATERIAL, COMBUSTIBLE BUILDINGS, THE CONTRACTOR SHALL PROVIDE SAFEGUARDS A OUTLINED IN THE NEC LATEST REVISION SUBJECT TO THE APPROVAL OF THE CITY & COUNTY BUILDING INSPECTORS.
8. THE FRONT SIDE OF THE CONCRETE PAD SHALL ALWAYS BE LOCATED TO FACE THE VEHICULAR ACCESS AND SHALL BE FREE OF ANY OBSTRUCTIONS AT ALL TIMES.
9. WHEN PARTS OF BUILDING STRUCTURES ARE LOCATED DIRECTLY OVER THE CONCRETE PAD, A MINIMUM CLEARANCE OF 9 FEET FROM THE PAD GRADE IS REQUIRED. THE CUSTOMER SHALL PROVIDE ADEQUATE SAFEGUARDS AS OUTLINED IN THE NEC, LATEST REVISION, AND IS SUBJECT TO APPROVAL OF THE CITY & COUNTY BUILDING INSPECTORS.
10. ALL DUCTLINES SHALL CONTAIN A "MULE TAPE" PULL LINE (WESCO CAT. #072592000 OR EQUIVALENT).
11. AFTER THE CONDUITS ARE INSTALLED, THE CONTRACTOR SHALL PASS A SMOOTH BULLET-SHAPED WOODEN TEST MANDREL THROUGH THE ENTIRE LENGTH OF EACH CONDUIT TO TEST FOR FREEDOM OF BURRS AND OBSTRUCTIONS.
12. A UTILITY STAND-BY MAN IS REQUIRED TO BE AT THE SITE AT THE TIME ANY NON-UTILITY CO. PERSONNEL WILL BE BREAKING INTO OR ENTERING ANY FACILITIES THAT CONTAIN ENERGIZED UTILITY EQUIPMENT OR CABLES. CALL MECO - PHONE 871-777.

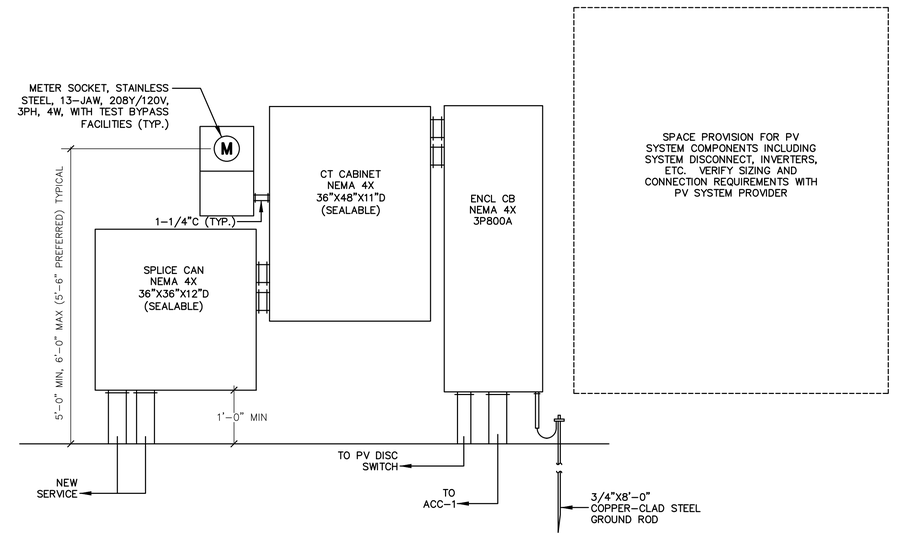

SERVICE EQUIPMENT ELEVATION

SCALE: 3/4" = 1'-0"

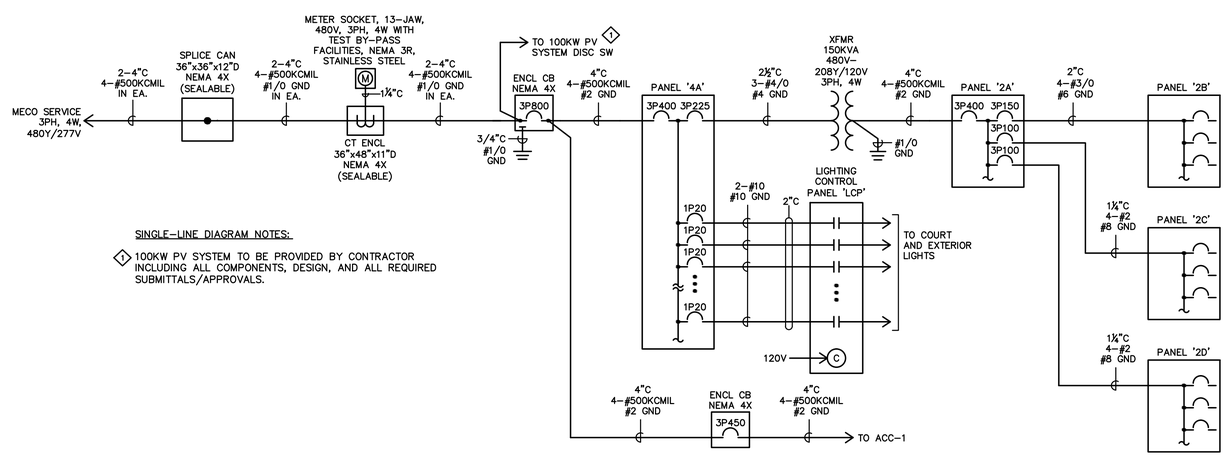

SINGLE-LINE DIAGRAM NOTES:

1. 100KW PV SYSTEM TO BE PROVIDED BY CONTRACTOR INCLUDING ALL COMPONENTS, DESIGN, AND ALL REQUIRED SUBMITTALS/APPROVALS.

SINGLE-LINE DIAGRAM

THIS DRAWING IS AN "INSTRUMENT OF SERVICE" BY ECM INC. THIS WORK IS A PART OF AN INTEGRATED PROCESS OF TECHNICAL DESIGN. USE OUTSIDE THIS PROCESS IS INAPPROPRIATE AND TRANSFER OF ITS OBSERVATIONS, CONCLUSIONS, OR METHODOLOGY TO ANY OTHER WORK MAY HAVE SERIOUS CONSEQUENCES.

BID SET

ECM INC.
Electrical Engineering Consultants
MAUI OFFICE
150 North Market Street
Wailuku, Maui, HI. 96793
Phone: (808)242-2070
Fax: (808)244-9639
E-mail: ecm@ecm-maui.com

JERAL M. FUKUDA
LICENSED PROFESSIONAL ENGINEER
No. 10378-E
HAWAII, U.S.A.

APRIL 30, 2018
EXPIRATION DATE

THIS WORK WAS PREPARED BY ME OR UNDER MY SUPERVISION AND CONSTRUCTION OF THIS PROJECT WILL BE UNDER MY OBSERVATION. (SUPERVISION OF CONSTRUCTION AS DEFINED UNDER SECTION 16-82-2 OF CHAPTER 82: RULES OF THE BOARD OF PROFESSIONAL ENGINEERS, ARCHITECTS AND LAND SURVEYORS; STATE OF HAWAII.)

Note: Contractor shall check and verify all dimensions at job before proceeding with work.

REVISIONS

NO	DATE	DESCRIPTION	INI

JOB NO. 2014-81
DATE: 11/01/16
DRAWN BY: RMB
DESIGNED BY: JMF
CHECKED BY: JMF

ELECTRICAL PLANS FOR:
SOUTH MAUI COMMUNITY PARK
KIHEI, MAUI, HI
TMK: (2) 2-2-002:042

SHEET NO.
E-2
2 OF - SHEETS

2014-81
2
1
0
24x36

2014-81-E2

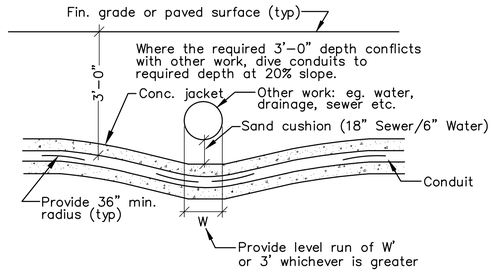

TYPICAL DUCTS CROSSING UNDER OTHER WORK

NOT TO SCALE

WATERLINE NOTES:

1. PLANS SUBJECT TO REVIEW AND APPROVAL OF UTILITY COMPANIES.
2. THE CONTRACTOR/UTILITY COMPANY SHALL CONTACT THE DEPARTMENT OF WATER SUPPLY AT PHONE # 270-7340 ONE (1) WEEK PRIOR TO COMMENCEMENT OF WORK.
3. THE CONTRACTOR/UTILITY COMPANY SHALL BE RESPONSIBLE TO VERIFY THE EXACT DEPTH AND LOCATION OF EXISTING WATERLINES IN THE PROJECT AREA PRIOR TO COMMENCEMENT OF WORK AND SHALL MEET WITH THE DEPARTMENT OF WATER SUPPLY PERSONNEL OUT IN THE FIELD TO HELP LOCATE THE EXISTING WATERLINES IN THE PROJECT AREA IF NECESSARY.
4. MAINTAIN A MINIMUM OF THREE (3) FEET CLEAR HORIZONTAL SEPARATION BETWEEN EXISTING WATERLINES AND INSTALLED UTILITIES.
5. MAINTAIN A MINIMUM OF SIX (6) INCHES CLEAR VERTICAL SEPARATION BETWEEN EXISTING WATERLINES AND INSTALLED UTILITIES AT ALL CROSSINGS.
6. ANY INSTALLED UTILITY CROSSING AN EXISTING WATERLINE SHALL BE CONCRETE JACKETED A MINIMUM OF FIVE (5) FEET ON BOTH SIDES OF THE CROSSING.

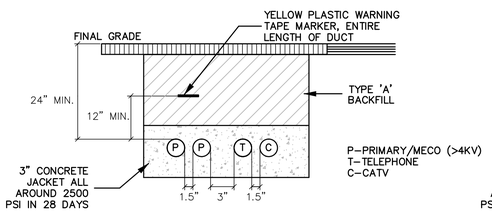

DUCT SECTION A

NOT TO SCALE

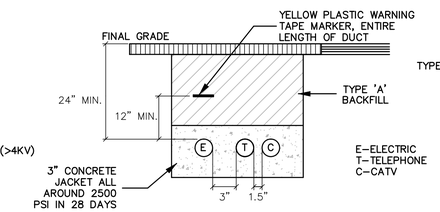

DUCT SECTION B

NOT TO SCALE

TYPE "A" – BEACH SAND, EARTH, OR EARTH AND GRAVEL. IF EARTH AND GRAVEL, THE MAXIMUM ROCK SHALL BE 1" AND THE MIXTURE SHALL CONTAIN NOT MORE THAN 50% BY VOLUME OF ROCK PARTICLES.

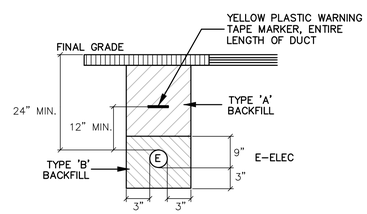

DUCT SECTION C

NOT TO SCALE

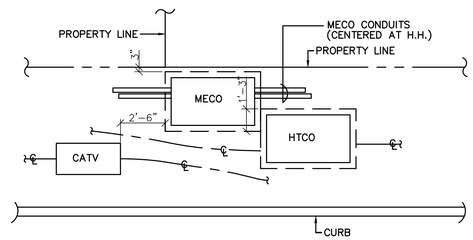

NOTES:

1. HANDHOLE SIZES PER PLAN.
2. COORDINATE LAYOUT WITH SIDEWALK LOCATIONS, IF BOXES ARE PLACED WITHIN SIDEWALK, THEY SHALL BE INSTALLED FLUSH WITH SIDEWASLK, COORDINATE WITH CIVIL LAYOUT.

TYPICAL HANDHOLE GROUPING

NOT TO SCALE

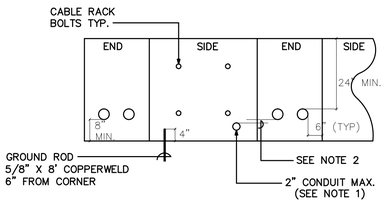

NOTES:

1. A MAXIMUM OF ONE 2"C. PER QUADRANT WILL BE PERMITTED TO ENTER THE SIDE WALL OF A PULLBOX. WHEN 2"C. IS USED FOR SERVICE LATERALS TWO CONDUITS MAY BE PERMITTED PER ENGINEER SPECIFICATIONS.
2. WHEN A CONDUIT ENTERS THE SIDEWALL OF A PULLBOX THE CONDUIT WILL BE INSTALLED SUCH THAT THE DIFFERENCE IN ELEVATION BETWEEN THE OUTSIDE SURFACE OF THE CONDUIT ENTERING THE END WALL IS 1".
3. A MAXIMUM OF 2-4"C. SHALL ENTER THE WALL END OF A 2' X 4' PULLBOX. NO CONDUIT WILL BE PERMITTED TO ENTER THE PULLBOX AT LOCATIONS OTHER THAN THOSE SPECIFIED BY THE ENGINEER.
4. CONDUITS WILL ENTER THE PULLBOX PERPENDICULAR TO THE WALL AT WHICH THEY ENTER. NO EXCEPTIONS WILL BE PERMITTED.
5. ALL CONDUITS WILL BE TERMINATED WITH A BELL END. THE BELL END SHALL BE INSTALLED FLUSH WITH THE INSIDE SURFACE OF THE OF THE PULLBOX. NO PROTRUSION INTO THE PULLBOX WILL BE PERMITTED.
6. ALL OPENINGS MADE IN THE PULLBOX FOR THE PURPOSE OF INSTALLING CONDUIT WILL BE SECURELY SEALED WITH CONCRETE GROUT. THE GROUT WILL BE A MINIMUM OF 4" THICK AND IN NO CASE LESS THAN THE THICKNESS OF THE PULLBOX WALL. THE INSIDE OF THE BOX WILL BE FINISHED SMOOTH AND FLUSH WITH EXISTING SURFACE.
7. ONE 5/8" X 8' COPPERCLAD GROUND ROD WILL BE INSTALLED IN THE PULLBOX AS PER THE DETAIL ATTACHED.

2' x 4' TEL. PULLBOX FOLD OUT DETAIL

NOT TO SCALE

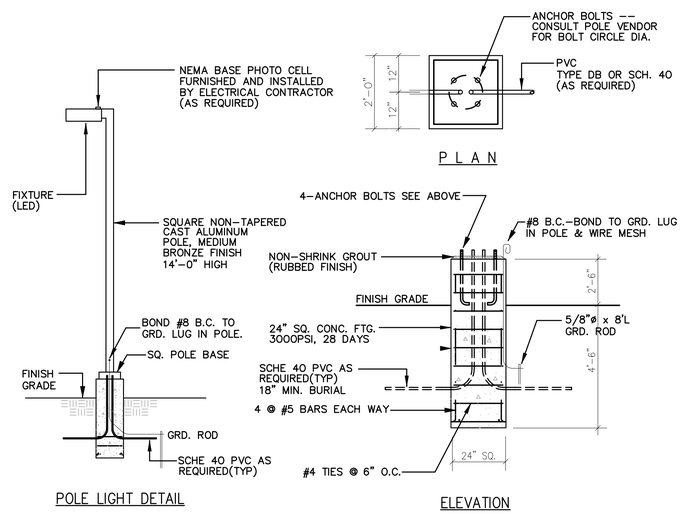

CONCRETE BASE DETAIL - AREA LIGHT

NOT TO SCALE

PARKING LIGHT DETAIL

NOT TO SCALE

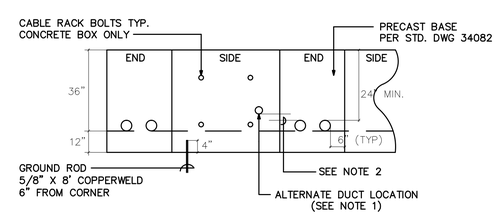

NOTES:

1. A MAXIMUM OF ONE 4"C. PER QUADRANT WILL BE PERMITTED TO ENTER THE SIDE WALL OF A PULLBOX. WHEN 2"C. IS USED FOR SERVICE LATERALS TWO CONDUITS MAY BE PERMITTED PER ENGINEER SPECIFICATIONS.
2. WHEN A CONDUIT ENTERS THE SIDEWALL OF A PULLBOX THE CONDUIT WILL BE INSTALLED SUCH THAT THE DIFFERENCE IN ELEVATION BETWEEN THE OUTSIDE SURFACE OF THE CONDUIT ENTERING THE END WALL IS 1".
3. A MAXIMUM OF 2-4"C. SHALL ENTER THE WALL END OF A 3' X 5' PULLBOX. NO CONDUIT WILL BE PERMITTED TO ENTER THE PULLBOX AT LOCATIONS OTHER THAN THOSE SPECIFIED BY THE ENGINEER.
4. CONDUITS WILL ENTER THE PULLBOX PERPENDICULAR TO THE WALL AT WHICH THEY ENTER. NO EXCEPTIONS WILL BE PERMITTED.
5. ALL CONDUITS WILL BE TERMINATED WITH A BELL END. THE BELL END SHALL BE INSTALLED FLUSH WITH THE INSIDE SURFACE OF THE OF THE PULLBOX. NO PROTRUSION INTO THE PULLBOX WILL BE PERMITTED.
6. ALL OPENINGS MADE IN THE PULLBOX FOR THE PURPOSE OF INSTALLING CONDUIT WILL BE SECURELY SEALED WITH CONCRETE GROUT. THE GROUT WILL BE A MINIMUM OF 4" THICK AND IN NO CASE LESS THAN THE THICKNESS OF THE PULLBOX WALL. THE INSIDE OF THE BOX WILL BE FINISHED SMOOTH AND FLUSH WITH EXISTING SURFACE.
7. ONE 5/8" X 8' COPPERCLAD GROUND ROD WILL BE INSTALLED IN THE PULLBOX AS PER THE DETAIL ATTACHED.

3' x 5' TEL. PULLBOX FOLD OUT DETAIL

NOT TO SCALE

BID SET

THIS DRAWING IS AN "INSTRUMENT OF SERVICE" BY ECM INC. THIS WORK IS A PART OF AN INTEGRATED PROCESS OF TECHNICAL DESIGN. USE OUTSIDE THIS PROCESS IS INAPPROPRIATE AND TRANSFER OF ITS OBSERVATIONS, CONCLUSIONS, OR METHODOLOGY TO ANY OTHER WORK MAY HAVE SERIOUS CONSEQUENCES.

ECM Inc.
Electrical Engineering Consultants
MAUI OFFICE
150 North Market Street
Wailuku, Maui, HI. 96793
Phone: (808)242-2070
Fax: (808)244-9639
E-mail: ecm@ecm-maui.com

JERAL M. FUKUDA
LICENSED PROFESSIONAL ENGINEER
No. 10378-E
HAWAII, U.S.A.

APRIL 30, 2018
EXPIRATION DATE

THIS WORK WAS PREPARED BY ME OR UNDER MY SUPERVISION AND CONSTRUCTION OF THIS PROJECT WILL BE UNDER MY OBSERVATION. (SUPERVISION OF CONSTRUCTION AS DEFINED UNDER SECTION 16-82-2 OF CHAPTER 82: RULES OF THE BOARD OF PROFESSIONAL ENGINEERS, ARCHITECTS AND LAND SURVEYORS; STATE OF HAWAII.)

Note: Contractor shall check and verify all dimensions at job before proceeding with work.

REVISIONS

NO	DATE	DESCRIPTION	INI

JOB NO. 2014-81
DATE: 11/01/16
DRAWN BY: RMB
DESIGNED BY: JMF
CHECKED BY: JMF

ELECTRICAL PLANS FOR:
SOUTH MAUI COMMUNITY PARK
KIHEI, MAUI, HI
TMK: (2) 2-2-002:042

SHEET NO.
E-3
3 OF – SHEETS

2014-81
2
1
0
24x36

2014-81-E3

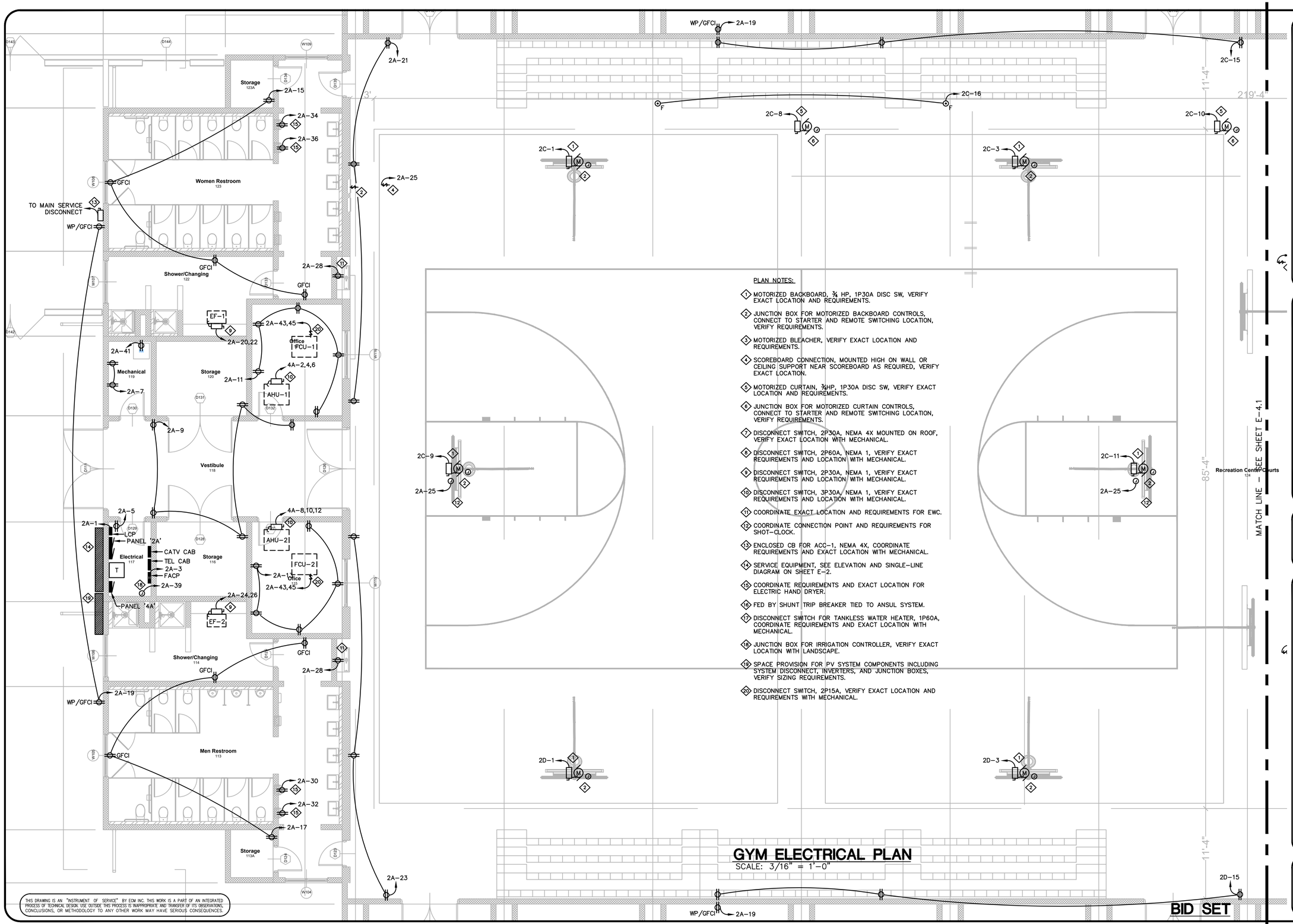

PLAN NOTES:

1. MOTORIZED BACKBOARD, ¾ HP, 1P30A DISC SW, VERIFY EXACT LOCATION AND REQUIREMENTS.
2. JUNCTION BOX FOR MOTORIZED BACKBOARD CONTROLS, CONNECT TO STARTER AND REMOTE SWITCHING LOCATION, VERIFY REQUIREMENTS.
3. MOTORIZED BLEACHER, VERIFY EXACT LOCATION AND REQUIREMENTS.
4. SCOREBOARD CONNECTION, MOUNTED HIGH ON WALL OR CEILING SUPPORT NEAR SCOREBOARD AS REQUIRED, VERIFY EXACT LOCATION.
5. MOTORIZED CURTAIN, ¾HP, 1P30A DISC SW, VERIFY EXACT LOCATION AND REQUIREMENTS.
6. JUNCTION BOX FOR MOTORIZED CURTAIN CONTROLS, CONNECT TO STARTER AND REMOTE SWITCHING LOCATION, VERIFY REQUIREMENTS.
7. DISCONNECT SWITCH, 2P30A, NEMA 4X MOUNTED ON ROOF, VERIFY EXACT LOCATION WITH MECHANICAL.
8. DISCONNECT SWITCH, 2P60A, NEMA 1, VERIFY EXACT REQUIREMENTS AND LOCATION WITH MECHANICAL.
9. DISCONNECT SWITCH, 2P30A, NEMA 1, VERIFY EXACT REQUIREMENTS AND LOCATION WITH MECHANICAL.
10. DISCONNECT SWITCH, 3P30A, NEMA 1, VERIFY EXACT REQUIREMENTS AND LOCATION WITH MECHANICAL.
11. COORDINATE EXACT LOCATION AND REQUIREMENTS FOR EWC.
12. COORDINATE CONNECTION POINT AND REQUIREMENTS FOR SHOT-CLOCK.
13. ENCLOSED CB FOR ACC-1, NEMA 4X, COORDINATE REQUIREMENTS AND EXACT LOCATION WITH MECHANICAL.
14. SERVICE EQUIPMENT, SEE ELEVATION AND SINGLE-LINE DIAGRAM ON SHEET E-2.
15. COORDINATE REQUIREMENTS AND EXACT LOCATION FOR ELECTRIC HAND DRYER.
16. FED BY SHUNT TRIP BREAKER TIED TO ANSUL SYSTEM.
17. DISCONNECT SWITCH FOR TANKLESS WATER HEATER, 1P60A, COORDINATE REQUIREMENTS AND EXACT LOCATION WITH MECHANICAL.
18. JUNCTION BOX FOR IRRIGATION CONTROLLER, VERIFY EXACT LOCATION WITH LANDSCAPE.
19. SPACE PROVISION FOR PV SYSTEM COMPONENTS INCLUDING SYSTEM DISCONNECT, INVERTERS, AND JUNCTION BOXES, VERIFY SIZING REQUIREMENTS.
20. DISCONNECT SWITCH, 2P15A, VERIFY EXACT LOCATION AND REQUIREMENTS WITH MECHANICAL.

GYM ELECTRICAL PLAN

SCALE: 3/16" = 1'-0"

THIS DRAWING IS AN "INSTRUMENT OF SERVICE" BY ECM INC. THIS WORK IS A PART OF AN INTEGRATED PROCESS OF TECHNICAL DESIGN. USE OUTSIDE THIS PROCESS IS INAPPROPRIATE AND TRANSFER OF ITS OBSERVATIONS, CONCLUSIONS, OR METHODOLOGY TO ANY OTHER WORK MAY HAVE SERIOUS CONSEQUENCES.

BID SET

2014-81-E4

ECM INC.
Electrical Engineering Consultants
MAUI OFFICE
150 North Market Street
Wailuku, Maui, HI. 96793
Phone: (808)242-2070
Fax: (808)244-9639
E-mail: ecm@ecm-maui.com

JERAL M. FUKUDA
LICENSED PROFESSIONAL ENGINEER
No. 10378-E
HAWAII, U.S.A.

APRIL 30, 2018
EXPIRATION DATE

THIS WORK WAS PREPARED BY ME OR UNDER MY SUPERVISION AND CONSTRUCTION OF THIS PROJECT WILL BE UNDER MY OBSERVATION. (SUPERVISION OF CONSTRUCTION AS DEFINED UNDER SECTION 16-82-2 OF CHAPTER 82: RULES OF THE BOARD OF PROFESSIONAL ENGINEERS, ARCHITECTS AND LAND SURVEYORS; STATE OF HAWAII.)

Note: Contractor shall check and verify all dimensions at job before proceeding with work.

REVISIONS			
NO	DATE	DESCRIPTION	INI

JOB NO. 2014-81
DATE: 11/01/16
DRAWN BY: RMB
DESIGNED BY: JMF
CHECKED BY: JMF

ELECTRICAL PLANS FOR:

SOUTH MAUI COMMUNITY PARK

KIHEI, MAUI, HI

TMK: (2) 2-2-002:042

SHEET NO.

E-4

4 OF – SHEETS

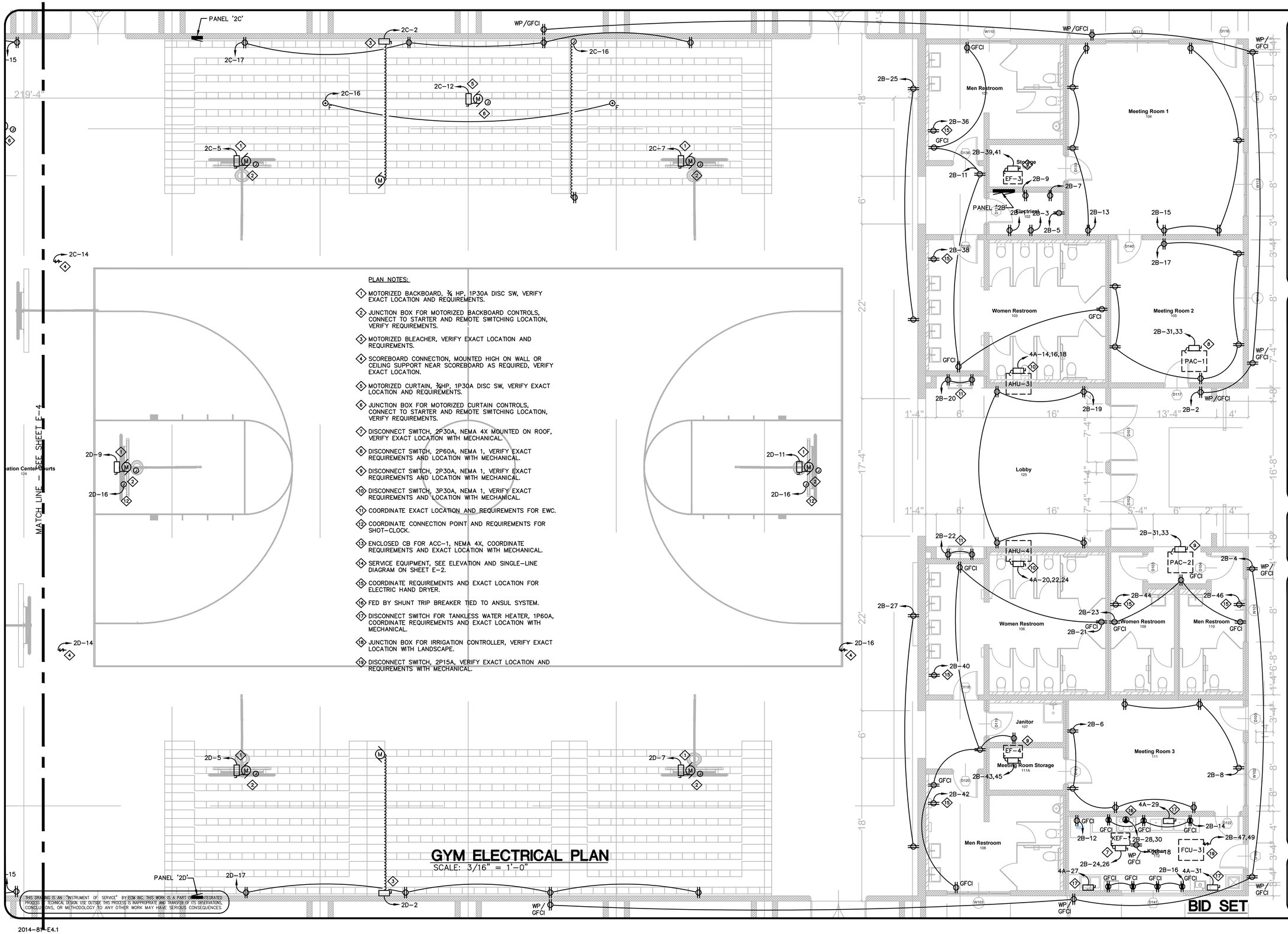

PLAN NOTES:

1. MOTORIZED BACKBOARD, ¾ HP, 1P30A DISC SW, VERIFY EXACT LOCATION AND REQUIREMENTS.
2. JUNCTION BOX FOR MOTORIZED BACKBOARD CONTROLS, CONNECT TO STARTER AND REMOTE SWITCHING LOCATION, VERIFY REQUIREMENTS.
3. MOTORIZED BLEACHER, VERIFY EXACT LOCATION AND REQUIREMENTS.
4. SCOREBOARD CONNECTION, MOUNTED HIGH ON WALL OR CEILING SUPPORT NEAR SCOREBOARD AS REQUIRED, VERIFY EXACT LOCATION.
5. MOTORIZED CURTAIN, ½HP, 1P30A DISC SW, VERIFY EXACT LOCATION AND REQUIREMENTS.
6. JUNCTION BOX FOR MOTORIZED CURTAIN CONTROLS, CONNECT TO STARTER AND REMOTE SWITCHING LOCATION, VERIFY REQUIREMENTS.
7. DISCONNECT SWITCH, 2P30A, NEMA 4X MOUNTED ON ROOF, VERIFY EXACT LOCATION WITH MECHANICAL.
8. DISCONNECT SWITCH, 2P60A, NEMA 1, VERIFY EXACT REQUIREMENTS AND LOCATION WITH MECHANICAL.
9. DISCONNECT SWITCH, 2P30A, NEMA 1, VERIFY EXACT REQUIREMENTS AND LOCATION WITH MECHANICAL.
10. DISCONNECT SWITCH, 3P30A, NEMA 1, VERIFY EXACT REQUIREMENTS AND LOCATION WITH MECHANICAL.
11. COORDINATE EXACT LOCATION AND REQUIREMENTS FOR EWC.
12. COORDINATE CONNECTION POINT AND REQUIREMENTS FOR SHOT-CLOCK.
13. ENCLOSED CB FOR ACC-1, NEMA 4X, COORDINATE REQUIREMENTS AND EXACT LOCATION WITH MECHANICAL.
14. SERVICE EQUIPMENT, SEE ELEVATION AND SINGLE-LINE DIAGRAM ON SHEET E-2.
15. COORDINATE REQUIREMENTS AND EXACT LOCATION FOR ELECTRIC HAND DRYER.
16. FED BY SHUNT TRIP BREAKER TIED TO ANSUL SYSTEM.
17. DISCONNECT SWITCH FOR TANKLESS WATER HEATER, 1P60A, COORDINATE REQUIREMENTS AND EXACT LOCATION WITH MECHANICAL.
18. JUNCTION BOX FOR IRRIGATION CONTROLLER, VERIFY EXACT LOCATION WITH LANDSCAPE.
19. DISCONNECT SWITCH, 2P15A, VERIFY EXACT LOCATION AND REQUIREMENTS WITH MECHANICAL.

GYM ELECTRICAL PLAN

SCALE: 3/16" = 1'-0"

THIS DRAWING IS AN "INSTRUMENT OF SERVICE" BY EDM INC. THIS WORK IS A PART OF AN INTEGRATED PROCESS. TECHNICAL DESIGN, USE OUTSIDE THIS PROCESS IS INAPPROPRIATE AND TRANSFER OF ITS OBSERVATIONS, CONCLUSIONS, OR METHODOLOGY TO ANY OTHER WORK MAY HAVE SERIOUS CONSEQUENCES.

BID SET

ECM Inc.
Electrical Engineering Consultants
MAIN OFFICE
150 North Market Street
Wailuku, Maui, HI. 96793
Phone: (808)244-2070
Fax: (808)244-9639
E-mail: ecm@ecm-maui.com

JERAL M. FUKUDA
LICENSED PROFESSIONAL ENGINEER
No. 10378-E
HAWAII, U.S.A.

APRIL 30, 2018
EXPIRATION DATE

THIS WORK WAS PREPARED BY ME OR UNDER MY SUPERVISION AND CONSTRUCTION OF THIS PROJECT WILL BE UNDER MY OBSERVATION. (SUPERVISION OF CONSTRUCTION AS DEFINED UNDER SECTION 16-82-2 OF CHAPTER 82: RULES OF THE BOARD OF PROFESSIONAL ENGINEERS, ARCHITECTS AND LAND SURVEYORS; STATE OF HAWAII.)

Note: Contractor shall check and verify all dimensions at job before proceeding with work.

REVISIONS

NO	DATE	DESCRIPTION	INI

JOB NO. 2014-81
DATE: 11/01/16
DRAWN BY: RMB
DESIGNED BY: JMF
CHECKED BY: JMF

ELECTRICAL PLANS FOR:
SOUTH MAUI COMMUNITY PARK
KIHEI, MAUI, HI
TMK: (2) 2-2-002:042

SHEET NO.
E-4.1
5 OF – SHEETS

2014-81 E4.1

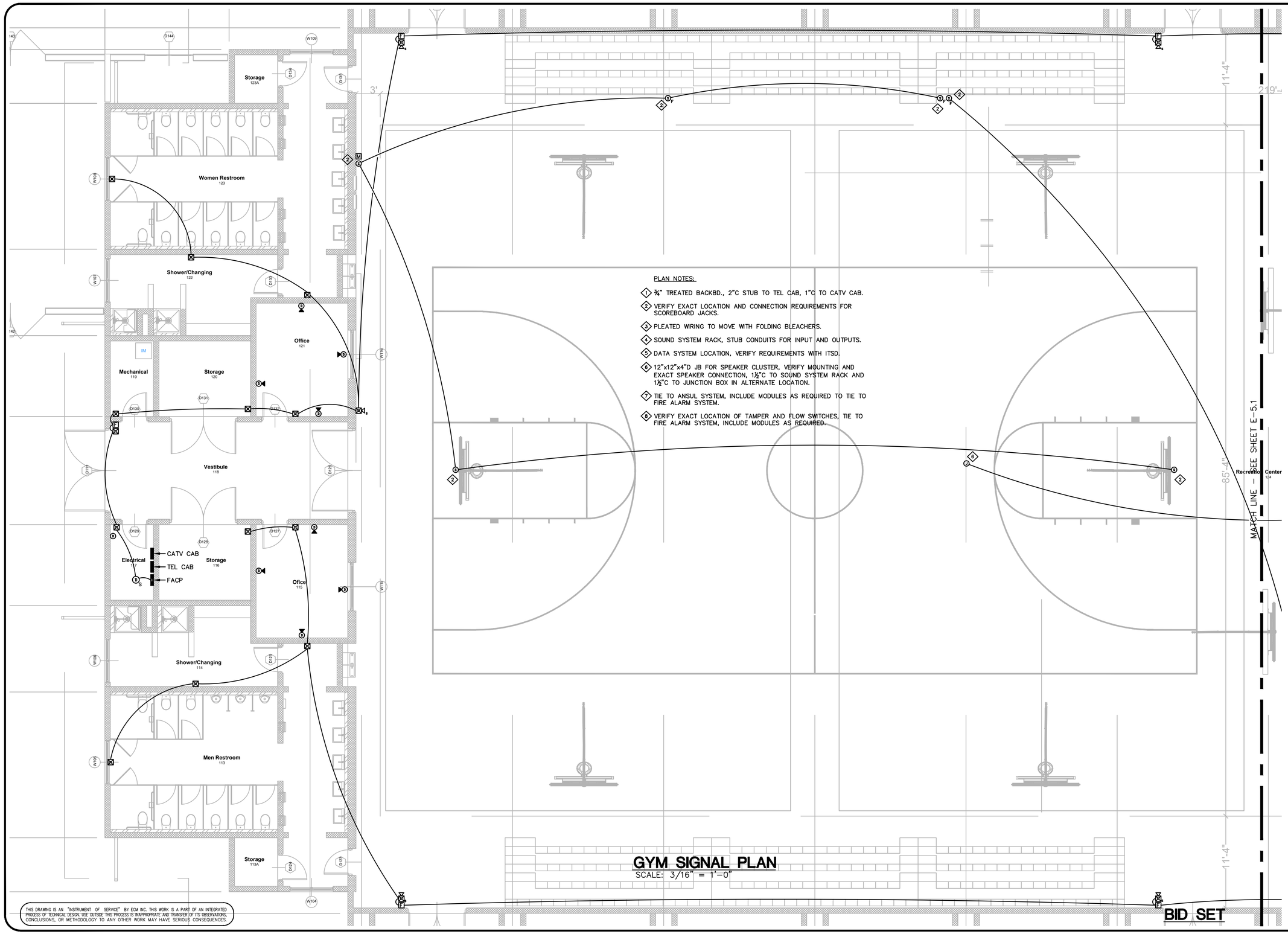

2014-81-E5

ECM INC.
Electrical Engineering Consultants
MAUI OFFICE
150 North Market Street
Wailuku, Maui, HI. 96793
Phone: (808)242-2070
Fax: (808)244-9539
E-mail: ecm@ecm-maui.com

JERAL M. FUKUDA
LICENSED PROFESSIONAL ENGINEER
No. 10378-E
HAWAII, U.S.A.

APRIL 30, 2018
EXPIRATION DATE

THIS WORK WAS PREPARED BY ME OR UNDER MY SUPERVISION AND CONSTRUCTION OF THIS PROJECT WILL BE UNDER MY OBSERVATION. (SUPERVISION OF CONSTRUCTION AS DEFINED UNDER SECTION 16-82-2 OF CHAPTER 82: RULES OF THE BOARD OF PROFESSIONAL ENGINEERS, ARCHITECTS AND LAND SURVEYORS; STATE OF HAWAII.)

Note: Contractor shall check and verify all dimensions at job before proceeding with work.

REVISIONS

NO	DATE	DESCRIPTION	INI

JOB NO. 2014-81
DATE: 11/01/16
DRAWN BY: RMB
DESIGNED BY: JMF
CHECKED BY: JMF

ELECTRICAL PLANS FOR:
SOUTH MAUI COMMUNITY PARK
KIHEI, MAUI, HI
TMK: (2) 2-2-002:042

SHEET NO.
E-5
6 OF – SHEETS

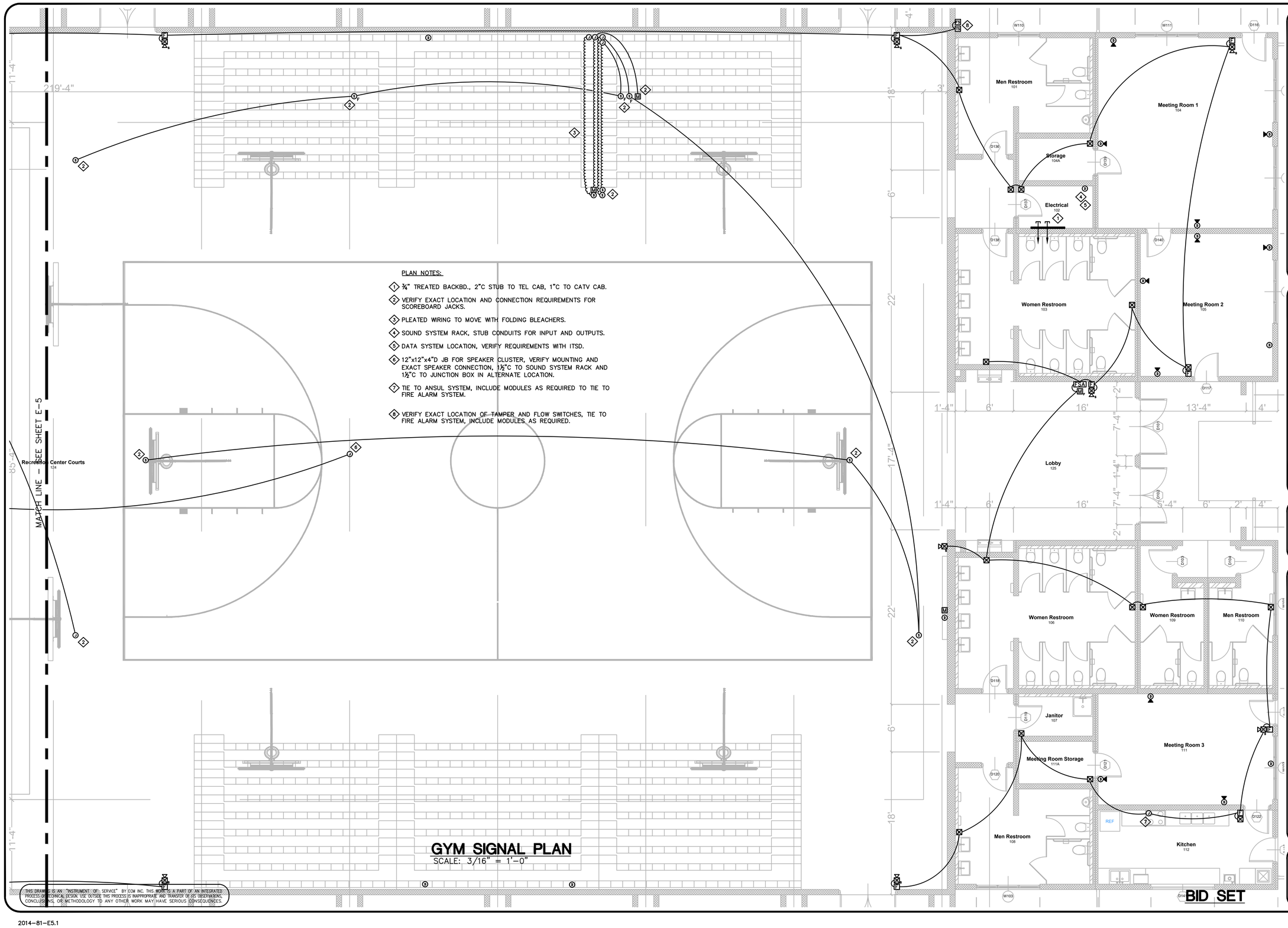

PLAN NOTES:

1. ¾" TREATED BACKBD., 2"C STUB TO TEL CAB, 1"C TO CATV CAB.
2. VERIFY EXACT LOCATION AND CONNECTION REQUIREMENTS FOR SCOREBOARD JACKS.
3. PLEATED WIRING TO MOVE WITH FOLDING BLEACHERS.
4. SOUND SYSTEM RACK, STUB CONDUITS FOR INPUT AND OUTPUTS.
5. DATA SYSTEM LOCATION, VERIFY REQUIREMENTS WITH ITSD.
6. 12"x12"x4"D JB FOR SPEAKER CLUSTER, VERIFY MOUNTING AND EXACT SPEAKER CONNECTION, 1½"C TO SOUND SYSTEM RACK AND 1½"C TO JUNCTION BOX IN ALTERNATE LOCATION.
7. TIE TO ANSUL SYSTEM, INCLUDE MODULES AS REQUIRED TO TIE TO FIRE ALARM SYSTEM.
8. VERIFY EXACT LOCATION OF TAMPER AND FLOW SWITCHES, TIE TO FIRE ALARM SYSTEM, INCLUDE MODULES AS REQUIRED.

GYM SIGNAL PLAN

SCALE: 3/16" = 1'-0"

THIS DRAWING IS AN "INSTRUMENT OF SERVICE" BY ECM INC. THIS WORK IS A PART OF AN INTEGRATED PROCESS OF TECHNICAL DESIGN. USE OUTSIDE THIS PROCESS IS INAPPROPRIATE AND TRANSFER OF ITS OBSERVATIONS, CONCLUSIONS, OR METHODOLOGY TO ANY OTHER WORK MAY HAVE SERIOUS CONSEQUENCES.

BID SET

2014-81-E5.1

ECM Inc.
Electrical Engineering Consultants

MAUI OFFICE
130 North Market Street
Wailuku, Maui, HI. 96793
Phone: (808)244-2070
Fax: (808)244-9639
E-mail: ecm@ecm-maui.com

JERAL M. FUKUDA
LICENSED PROFESSIONAL ENGINEER
No. 10378-E
HAWAII, U.S.A.

APRIL 30, 2018
EXPIRATION DATE

THIS WORK WAS PREPARED BY ME OR UNDER MY SUPERVISION AND CONSTRUCTION OF THIS PROJECT WILL BE UNDER MY OBSERVATION. (SUPERVISION OF CONSTRUCTION AS DEFINED UNDER SECTION 16-82-2 OF CHAPTER 82: RULES OF THE BOARD OF PROFESSIONAL ENGINEERS, ARCHITECTS AND LAND SURVEYORS: STATE OF HAWAII.)

Note: Contractor shall check and verify all dimensions at job before proceeding with work.

REVISIONS

NO	DATE	DESCRIPTION	INI

JOB NO. 2014-81
DATE: 11/01/16
DRAWN BY: RMB
DESIGNED BY: JMF
CHECKED BY: JMF

ELECTRICAL PLANS FOR:
SOUTH MAUI COMMUNITY PARK
KIHEI, MAUI, HI
TMK: (2) 2-2-002:042

SHEET NO.
E-5.1
7 OF – SHEETS

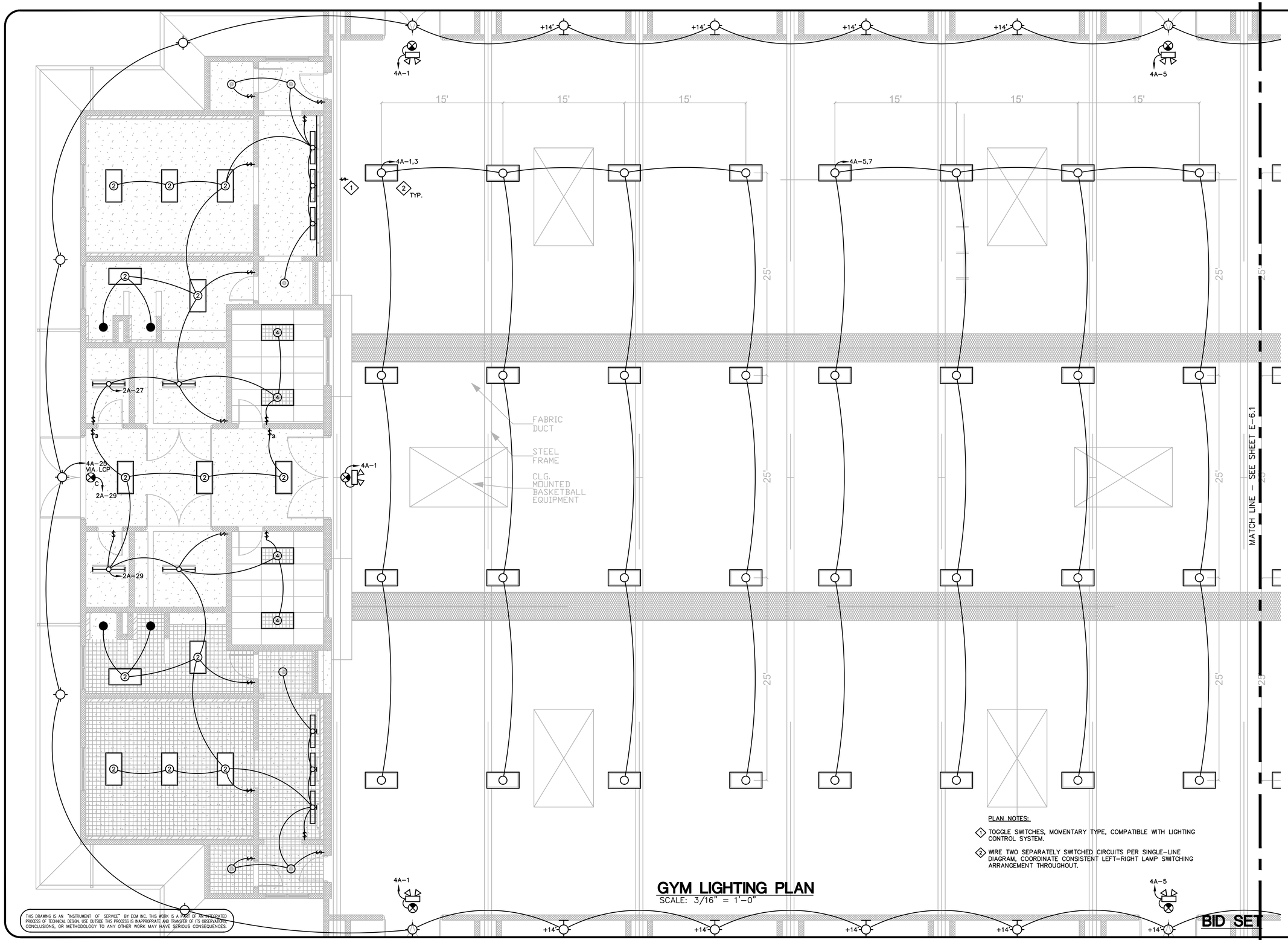

PLAN NOTES:

1. TOGGLE SWITCHES, MOMENTARY TYPE, COMPATIBLE WITH LIGHTING CONTROL SYSTEM.
2. WIRE TWO SEPARATELY SWITCHED CIRCUITS PER SINGLE-LINE DIAGRAM, COORDINATE CONSISTENT LEFT-RIGHT LAMP SWITCHING ARRANGEMENT THROUGHOUT.

GYM LIGHTING PLAN

SCALE: 3/16" = 1'-0"

BID SET

THIS DRAWING IS AN "INSTRUMENT OF SERVICE" BY ECM INC. THIS WORK IS A PART OF AN INTEGRATED PROCESS OF TECHNICAL DESIGN. USE OUTSIDE THIS PROCESS IS INAPPROPRIATE AND TRANSFER OF ITS OBSERVATIONS, CONCLUSIONS, OR METHODOLOGY TO ANY OTHER WORK MAY HAVE SERIOUS CONSEQUENCES.

2014-81-E6

ECM INC.
Electrical Engineering Consultants

MAUI OFFICE
130 North Market Street
Wailuku, Maui, HI. 96793
Phone: (808)242-2070
Fax: (808)244-9639
E-mail: ecm@ecm-maui.com

JERAL M. FUKUDA
LICENSED PROFESSIONAL ENGINEER
No. 10378-E
HAWAII, U.S.A.

APRIL 30, 2018
EXPIRATION DATE

THIS WORK WAS PREPARED BY ME OR UNDER MY SUPERVISION AND CONSTRUCTION OF THIS PROJECT WILL BE UNDER MY OBSERVATION. (SUPERVISION OF CONSTRUCTION AS DEFINED UNDER SECTION 16-52-2 OF CHAPTER 52; RULES OF THE BOARD OF PROFESSIONAL ENGINEERS, ARCHITECTS AND LAND SURVEYORS; STATE OF HAWAII.)

Note: Contractor shall check and verify all dimensions at job before proceeding with work.

REVISIONS

NO	DATE	DESCRIPTION	INI

JOB NO. 2014-81
DATE: 11/01/16
DRAWN BY: RMB
DESIGNED BY: JMF
CHECKED BY: JMF

ELECTRICAL PLANS FOR:
SOUTH MAUI COMMUNITY PARK
KIHEI, MAUI, HI
TMK: (2) 2-2-002:042

SHEET NO.
E-6
8 OF - SHEETS

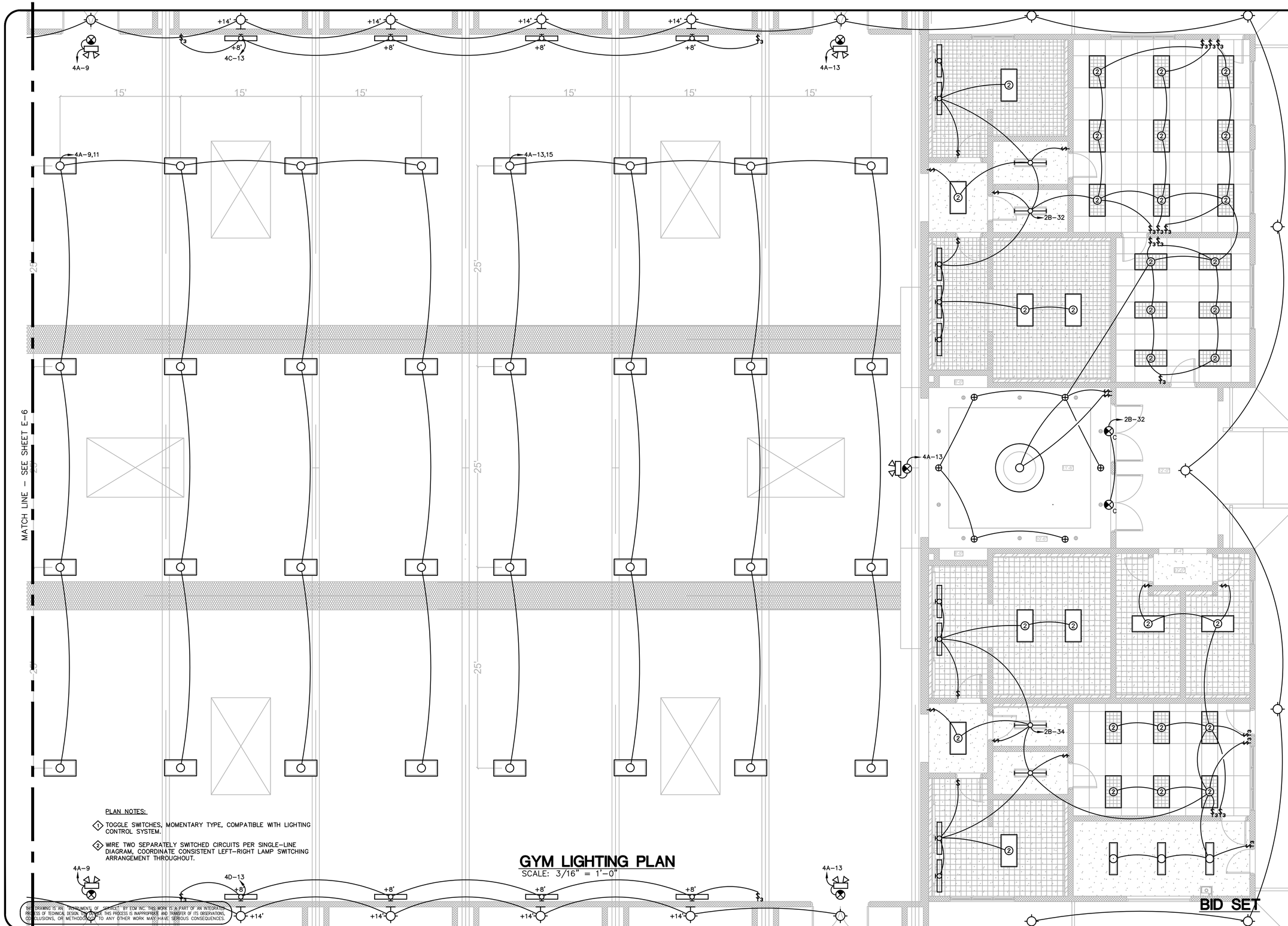

GYM LIGHTING PLAN

SCALE: 3/16" = 1'-0"

BID SET

ECM Inc.
Electrical Engineering Consultants

MAUI OFFICE
130 North Market Street
Wailuku, Maui, HI. 96793
Phone: (808)242-2070
Fax: (808)244-9639
E-mail: ecm@ecm-maui.com

JERAL M. FUKUDA
LICENSED PROFESSIONAL ENGINEER
No. 10378-E
HAWAII, U.S.A.

APRIL 30, 2018
EXPIRATION DATE

THIS WORK WAS PREPARED BY ME OR UNDER MY SUPERVISION AND CONSTRUCTION OF THIS PROJECT WILL BE UNDER MY OBSERVATION. (SUPERVISION OF CONSTRUCTION AS DEFINED UNDER SECTION 16-82-2 OF CHAPTER 82: RULES OF THE BOARD OF PROFESSIONAL ENGINEERS, ARCHITECTS AND LAND SURVEYORS; STATE OF HAWAII.)

Note: Contractor shall check and verify all dimensions at job before proceeding with work.

REVISIONS

NO	DATE	DESCRIPTION	INI

JOB NO. 2014-81
DATE: 11/01/16
DRAWN BY: RMB
DESIGNED BY: JMF
CHECKED BY: JMF

ELECTRICAL PLANS FOR:
SOUTH MAUI COMMUNITY PARK
KIHEI, MAUI, HI
TMK: (2) 2-2-002:042

SHEET NO.
E-6.1
9 OF – SHEETS

FIXTURE SCHEDULE

TYPE	SYMBOL	DESCRIPTION	MANUFACTURER	LAMP
A		4' LED, DIE-FRAMED ALUMINUM HOUSING, 4000K, FROSTED PRISMATIC LENS, EXTRA DRIVERS FOR BI-LEVEL SETUP, 22,000 LUMENS, 120-277V OPERATION.	LUSIO ES3P-UL-4M-40-WIDE-FP -LV-CRM-CABLEKIT/ SAFETYCABLE-GASKET OR APPROVED EQUAL	176W LED
B		LED RECESSED TROFFER, 2'X4', STEEL HOUSING, ACRYLIC PRISMATIC DIFFUSER, GRID, PAINTED AFTER FABRICATION, 4000K, 7,000 LUMNENS, 120V.	COLUMBIA LJT24-40K-VL-G-FS -A12125F-EU OR APPROVED EQUAL	68W LED
B1		SAME AS TYPE 'B' EXCEPT LOWER OUTPUT, AND GRID/FLANGE PER APPLICATION.	COLUMBIA LJT24-40K-LW-G/FK24-FS -A12125F-EU OR APPROVED EQUAL	39W LED
C		LED SURFACE MOUNTED, PRISMATIC ACRYLIC LENS, FOOD ZONE, 9,600 LUMENS, 120V.	PARAMOUNT FC6-2-L-4'-P20 -SURFACE MOUNT OR APPROVED EQUAL	80W LED
D		LED WALL MOUNTED, 4', SATIN ACRYLIC LENS, GLOSS WHITE 4000K, 2,500 LUMENS, 120V.	PRUDENTIAL S1-LED4-MO-4'-SAL-YGW -UNV-SUR-ND-EBCP2G OR APPROVED EQUAL	22W LED
E		LED STRIP FIXTURE, 4', PAINTED AFTER FABRICATION, 4000K, 3,200 LUMENS, 120V.	WILLIAMS 76-4-L32-840-DRV-UNV OR APPROVED EQUAL	28W LED
F		LED RECESSED DOWNLIGHT, 6" APERATURE, 1,500 LUMENS, 120V.	PRESCOLITE LF6LEDG4-6LFLED6G4 -40K-B6 OR APPROVED EQUAL	19W LED
F1		SAME AS TYPE 'F' EXCEPT WITH FRESNEL GLASS LENS.	PRESCOLITE LF6LEDG4-6LFLED6G4 -40K-IP65-B6 OR APPROVED EQUAL	19W LED
F2		SAME AS TYPE 'F' EXCEPT WITH 4' APERATURE AND 1,100 LUMENS.	PRESCOLITE LF4LEDG4-4LFLED5G4 -40K-B6 OR APPROVED EQUAL	14W LED
F3		LED RECESSED DOWNLIGHT, 6'-0" DIAMETER, 4000K, 14,000 LUMENS, 120V.	PRUDENTIAL 8960-LED4-LO-FWA-YGW -SC-120-X3B-ND OR APPROVED EQUAL	120W LED
G		RECESSED LED DOWNLIGHT, VANDAL SEALED AND GASKETED ACRYLIC ENAMELED HOUSING, WET LOCATION LISTED, 277V.	KIRLIN LRV-08472-43-277 OR APPROVED EQUAL	42W LED
H		LED WALL PACK, DIE-CAST ALUMINUM, WEATHER-TIGHT HOUSING, FULL-CUTOFF, WET LOCATION LISTED, ACRYLIC DIFFUSER, 277V.	HUBBELL LNC-7LU-4K-3-1 OR APPROVED EQUAL	17W LED
I		LED AREA LIGHT, DARK BRONZE, EXTRUDED ALUMINUM HOUSING, ANODIZED FINISH, TYPE 3 DISTRIBUTION, 14' POLE HEIGHT, 4" SQUARE ALUMINIUM POLE, PHOTOCELL, 277V.	KIM LIGHTING 1A/EKG401/3P/35/ 80L3K277/DB-A/A-33 PSA14-4188-A/DB-A/CLA OR APPROVED EQUAL	94W LED
I1	FT	SAME AS TYPE "I" EXCPET WITH TYPE 4 DISTRIBUTION.	KIM LIGHTING 1A/EKG401/4P/35/ 80L3K277/DB-A/A-33 PSA14-4188-A/DB-A/CLA OR APPROVED EQUAL	94W LED
J		LED AREA LIGHT, DARK BRONZE, CAST ALUMINUM HOUSING, ANODIZED FINISH, TYPE 5 DISTRIBUTION, 10' POLE HEIGHT, 3" SQUARE ALUMINIUM POLE, 3000K, 2,000 LUMENS, PHOTOCELL, 277V.	ARCHITECTURAL AREA LIGHTING PKWS-ANG-T5-9LED-3K -450MA-ULS-TEN-TA23-DBZ PS3-10'-3SS OR APPROVED EQUAL	39W LED
X		LED EXIT SIGN, THERMOPLASTIC HOUSING, UNIVERSAL MOUNT, 90-MINUTE EMERGENCY OPERATION, VANDAL RESISTANT SHIELD, 120-277V.	DUALITE EVE SERIES EVE-U-R-W-E-I-VRS3 OR APPROVED EQUAL	2.01W LED
X1	C	LED COMBINATION EXIT SIGN/EMERGENCY LIGHT, THERMOPLASTIC HOUSING, UNIVERSAL MOUNT, 90-MINUTE EMERGENCY OPERATION, 120-277V.	DUALITE EVC SERIES EVC-U-R-W-I OR APPROVED EQUAL	1.65W LED
X2		LED EMERGENCY LIGHT, THERMOPLASTIC HOUSING, HIGH OUTPUT, 546 LUMENS, WALL MOUNT, 90-MINUTE EMERGENCY OPERATION, 120-277V.	DUALITE EVHC12I-06L OR APPROVED EQUAL	3.7W LED

LCP SCHEDULE

LCP ID: 1

LOCATION: STORAGE ROOM

SUPPLY PANEL: 4A

RELAY	CIRCUIT	DESCRIPTION
1	1	COURT 1A – DRIVER A
2	3	COURT 1A – DRIVER B
3	5	COURT 1B – DRIVER A
4	7	COURT 1B – DRIVER B
5	9	COURT 2A – DRIVER A
6	11	COURT 2A – DRIVER B
7	13	COURT 2B – DRIVER A
8	15	COURT 2B – DRVIER B
9	19	POLE LIGHTS
10	21	POLE LIGHTS
11	23	POLE LIGHTS
12	25	PERIMETER

GROUP SWITCH SCHEDULE

CHANNEL	DESCRIPTION	FUNCTION	LOADS CONTROLLED
A	ALL ON	ON/OFF	ALL DRIVERS ON ALL COURT FIXTURES
B	HALF ON A	ON/OFF	DRIVER A OF ALL FIXTURES
C	HALF ON B	ON/OFF	DRIVER B OF ALL FIXTURES
D	COURT 1A	ON/OFF	COURT 1A – DRIVER A
E	COURT 1A	ON/OFF	COURT 1A – DRIVER B
F	COURT 1B	ON/OFF	COURT 1B – DRIVER A
G	COURT 1B	ON/OFF	COURT 1B – DRIVER B
H	COURT 2A	ON/OFF	COURT 2A – DRIVER A
I	COURT 2A	ON/OFF	COURT 2A – DRIVER B
J	COURT 2B	ON/OFF	COURT 2B – DRIVER A
K	COURT 2B	ON/OFF	COURT 2B – DRIVER B
L	PARKING	TIMER	POLE LIGHTS
M	PARKING	TIMER	POLE LIGHTS
N	PARKING	TIMER	POLE LIGHTS
O	PERIMETER	TIMER	PERIMETER
P	SPARE	UNUSED	

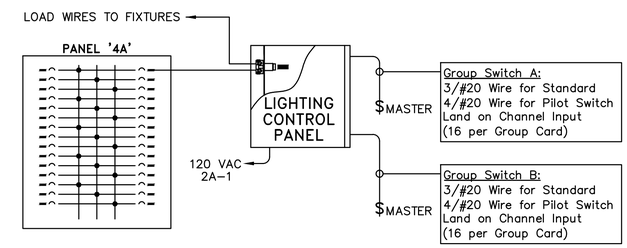

LIGHTING CONTROL PANEL CONNECTIONS

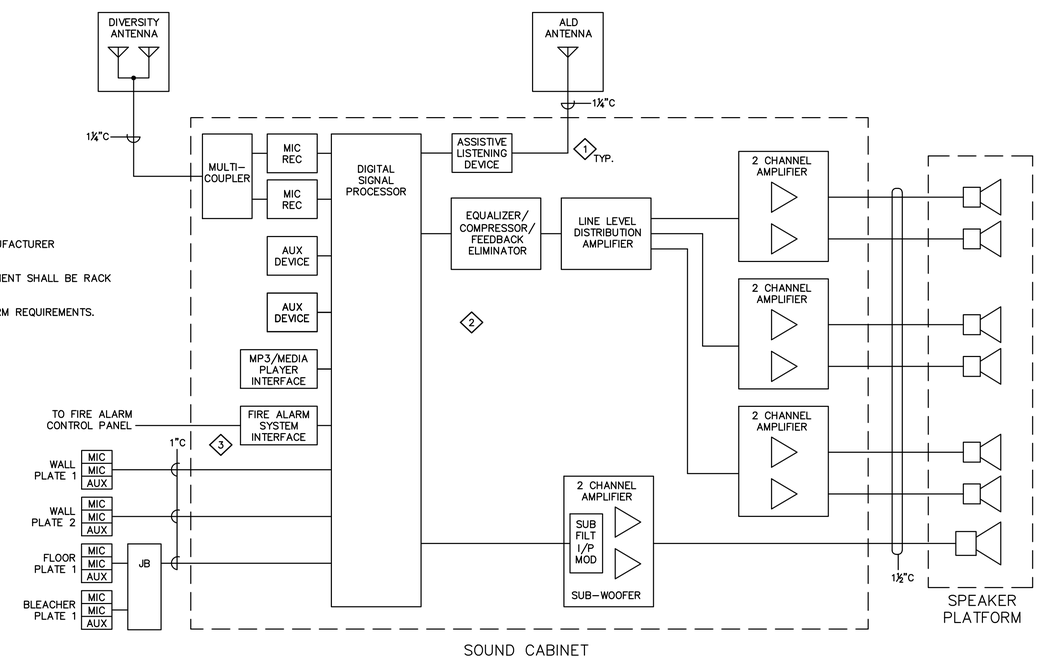

NOTES:

1. ALL CABLES PER MANUFACTURER REQUIREMENTS.
2. SOUND SYSTEM EQUIPMENT SHALL BE RACK MOUNTED
3. COORDINATE FIRE ALARM REQUIREMENTS.

SOUND SYSTEM DIAGRAM

BID SET

THIS DRAWING IS AN "INSTRUMENT OF SERVICE" BY ECM INC. THIS WORK IS A PART OF AN INTEGRATED PROCESS OF TECHNICAL DESIGN. USE OUTSIDE THIS PROCESS IS INAPPROPRIATE AND TRANSFER OF ITS OBSERVATIONS, CONCLUSIONS, OR METHODOLOGY TO ANY OTHER WORK MAY HAVE SERIOUS CONSEQUENCES.

2014-81-E7

ECM INC.
Electrical Engineering Consultants
MAIN OFFICE
150 North Market Street
Wailuku, Maui, HI. 96793
Phone: (808)242-2070
Fax: (808)244-9639
E-mail: ecm@ecm-maui.com

JERAL M. FUKUDA
LICENSED PROFESSIONAL ENGINEER
No. 10378-E
HAWAII, U.S.A.

APRIL 30, 2018
EXPIRATION DATE

THIS WORK WAS PREPARED BY ME OR UNDER MY SUPERVISION AND CONSTRUCTION OF THIS PROJECT WILL BE UNDER MY OBSERVATION. (SUPERVISION OF CONSTRUCTION AS DEFINED UNDER SECTION 16-82-2 OF CHAPTER 82: RULES OF THE BOARD OF PROFESSIONAL ENGINEERS, ARCHITECTS AND LAND SURVEYORS: STATE OF HAWAII.)

Note: Contractor shall check and verify all dimensions at job before proceeding with work.

REVISIONS

NO	DATE	DESCRIPTION	INI

JOB NO. 2014-81
DATE: 11/01/16
DRAWN BY: RMB
DESIGNED BY: JMF
CHECKED BY: JMF

ELECTRICAL PLANS FOR:
SOUTH MAUI COMMUNITY PARK
KIHEI, MAUI, HI
TMK: (2) 2-2-002:042

SHEET NO.
E-7
10 OF – SHEETS

PANEL 2A — A.I.C. RATING: 10K

VOLTAGE: 208Y/120V — PHASE: 3 — WIRE: 4WSN — CIRCUITS: 60

MOUNTING: SURFACE — MAIN BRKR: 3P400 — BREAKER: BOLT ON — MAIN BUS: 400A

CKT	DESCRIPTION	PHASE A	PHASE B	PHASE C	BRKR	WIRE	CKT	DESCRIPTION	PHASE A	PHASE B	PHASE C	BRKR	WIRE
1	LIGHT CONTROL PANEL	0.2			1P20	#12	2		15.7				
3	FACP		0.1		1P20	#12	4	PANEL 2B		18.6		3P150	#3/0*
5	R: ELEC RM			0.2	1P20	#12	6				15.8		
7	R: MECH RM	0.2			1P20	#12	8		7.5				
9	R: STORAGE/MAINT		0.9		1P20	#12	10	PANEL 2C		8.0		3P100	#2
11	R: OFFICE			0.9	1P20	#12	12				8.5		
13	R: OFFICE	0.9			1P20	#12	14		6.8				
15	R: MEN'S RESTROOM/SHOWER		0.7		1P20	#12	16	PANEL 2D		7.1		3P60	#6
17	R: WOMEN'S REST/SHOWER			0.7	1P20	#12	18				6.8		
19	R: EXTERIOR	0.7			1P20	#12	20	EF-1 (1HP)	0.9			2P20	#12
21	R: GYM		0.5		1P20	#12	22			0.9			
23	R: GYM			0.5	1P20	#12	24	EF-2 (1HP)			0.9	2P20	#12
25	SCOREBOARD	0.5			1P20	#12	26		0.9				
27	L: REST/OFFICE/STORAGE		0.9		1P20	#12	28	R: EWC		0.8		1P20	#12
29	L: REST/OFFICE			1.1	1P20	#12	30	HAND DRYER			1.4	1P20	#12
31	EV CHARGING STATION	3.6			2P40	#4*	32	HAND DRYER	1.4			1P20	#12
33			3.6				34	HAND DRYER		1.4		1P20	#12
35	EV CHARGING STATION			3.6	2P40	#4*	36	HAND DRYER			1.4	1P20	#12
37		3.6					38	SPARE	1.0			1P20	
39	R: IRRIGATION CONTROLLER		0.2		1P20	#12	40	SPARE		1.0		1P20	
41	R: ICE MACHINE			0.6	1P20	#12	42	SPARE			1.0	1P20	
43	E: FCU-1,2	0.1			2P15	#12	44	SPARE	1.0			1P20	
45			0.1				46	SPARE		1.0		1P20	
47	PFB						48	SPARE			1.0	1P20	
49	PFB						50	PFB					
51	PFB						52	PFB					
53	PFB						54	PFB					
55	PFB						56	PFB					
57	PFB						58	PFB					
59	PFB						60	PFB					
	ADDED TOTALS	9.8	7.0	7.6				ADDED TOTALS	35.2	38.8	36.8		

TOTAL CONNECTED LOAD: 135.2 KVA — * UPSIZED FOR VOLTAGE DROP CONSIDERATION — R: DENOTES RECEPTACLE LOAD
ESTIMATED DEMAND: 1.0 — L: DENOTES LIGHTING LOAD
TOTAL EST.DEMAND LOAD: 135.2 KVA — 375 A @ V = 208V — E: DENOTES A/C EQUIPMENT

PANEL 2B — A.I.C. RATING: 10K

VOLTAGE: 208Y/120V — PHASE: 3 — WIRE: 4WSN — CIRCUITS: 60

MOUNTING: SURFACE — MAIN BRKR: 150A — BREAKER: BOLT ON — MAIN BUS: 225A

CKT	DESCRIPTION	PHASE A	PHASE B	PHASE C	BRKR	WIRE	CKT	DESCRIPTION	PHASE A	PHASE B	PHASE C	BRKR	WIRE
1	R: TEL BACK BD	0.2			1P20	#12	2	R: EXTERIOR	0.9			1P20	#12
3	R: TEL BACK BD		0.2		1P20	#12	4	R: EXTERIOR		0.7		1P20	#10
5	R: ITSD EQUP			0.2	1P20	#12	6	R: MEETING RM			0.7	1P20	#12
7	R: PA SYSTEM	0.2			1P20	#12	8	R: MEETING RM	0.5			1P20	#12
9	R: ELEC		0.2		1P20	#12	10	R: DISPOSAL		1.0		1P20	#10
11	R: RESTROOMS			0.9	1P20	#12	12	R: REFRIGERATOR			1.0	1P20	#10
13	R: MEETING RM	0.7			1P20	#12	14	R: KITCHEN COUNTER	0.7			1P20	#10
15	R: MEETING RM		0.7		1P20	#12	16	R: KITCHEN COUNTER		0.9		1P20	#10
17	R: TICKET BOOTH			1.1	1P20	#12	18	R: ROOF (KEF-1)			0.2	1P20	#12
19	R: LOBBY	0.7			1P20	#12	20	R: EWC	0.8			1P20	#12
21	R: RESTROOMS		1.1		1P20	#12	22	R: EWC		0.8		1P20	#12
23	R: RESTROOMS			0.5	1P20	#12	24	KEF-1 (1/2HP)			0.6	2P15	#12
25	R: GYM	0.4			1P20	#12	26		0.6				
27	R: GYM		0.4		1P20	#12	28	RANGE		4.0		2P50**	#8
29	SPARE			1.0	1P20		30				4.0		
31	E: PAC-1	2.3			2P45	#8	32	L: MEETING/REST/LOBBY	1.8			1P20	#10
33			2.3				34	L: MEETING/RESTROOMS		1.4		1P20	#10
35	E: PAC-2			1.8	2P35	#10	36	HAND DRYER			1.4	1P20	#12
37		1.8					38	HAND DRYER	1.4			1P20	#12
39	E: EF-3 (1HP)		0.9		2P20	#12	40	HAND DRYER		1.4		1P20	#12
41				0.9			42	HAND DRYER			1.4	1P20	#12
43	E: EF-4 (1HP)	1.2			2P25	#12	44	HAND DRYER	1.4			1P20	#12
45			1.2				46	HAND DRYER		1.4		1P20	#12
47	E: FCU-3			0.1	2P15	#12	48	PFB					
49		0.1					50	PFB					
51	PFB						52	PFB					
53	PFB						54	PFB					
55	PFB						56	PFB					
57	PFB						58	PFB					
59	PFB						60	PFB					
	ADDED TOTALS	7.6	7.0	6.5				ADDED TOTALS	8.1	11.6	9.3		

TOTAL CONNECTED LOAD: 50.1 KVA — R: DENOTES RECEPTACLE LOAD
ESTIMATED DEMAND: 1.0 — ** SHUNT-TRIP TYPE BREAKER TIED TO ANSUL — L: DENOTES LIGHTING LOAD
TOTAL EST.DEMAND LOAD: 50.1 KVA — 139 A @ V = 208V — E: DENOTES A/C EQUIPMENT

PANEL 2C — A.I.C. RATING: 10K

VOLTAGE: 208Y/120V — PHASE: 3 — WIRE: 4WSN — CIRCUITS: 18

MOUNTING: SURFACE — MAIN BRKR: MLO — BREAKER: BOLT ON — MAIN BUS: 100A

CKT	DESCRIPTION	PHASE A	PHASE B	PHASE C	BRKR	WIRE	CKT	DESCRIPTION	PHASE A	PHASE B	PHASE C	BRKR	WIRE
1	MOTORIZED BACKBD (3/4HP)	1.7			1P25	#8	2	BLEACHER MOVER (3/4HP)	1.7			1P25	#12
3	MOTORIZED BACKBD (3/4HP)		1.7		1P25	#10	4	BLEACHER MOVER (3/4HP)		1.7		1P25	#12
5	MOTORIZED BACKBD (3/4HP)			1.7	1P25	#12	6	BLEACHER MOVER (3/4HP)			1.7	1P25	#12
7	MOTORIZED BACKBD (3/4HP)	1.7			1P25	#10	8	MOTORIZED CURTAIN (3/4HP)	1.7			1P25	#10
9	MOTORIZED BACKBD (3/4HP)		1.7		1P25	#6	10	MOTORIZED CURTAIN (3/4HP)		1.7		1P25	#10
11	MOTORIZED BACKBD (3/4HP)			1.7	1P25	#8	12	MOTORIZED CURTAIN (3/4HP)			1.7	1P25	#12
13	L: LIGHTS	0.2			1P20	#12	14	SCOREBOARD	0.5			1P20	#12
15	R: GYM		0.5		1P20	#10	16	SCOREBOARD CONTROLLER		0.7		1P20	#12
17	R: GYM			0.7	1P20	#10	18	SPARE			1.0	1P20	
	ADDED TOTALS	3.6	3.9	4.1				ADDED TOTALS	3.9	4.1	4.4		

TOTAL CONNECTED LOAD: 24.0 KVA — R: DENOTES RECEPTACLE LOAD
ESTIMATED DEMAND: 1.0 — L: DENOTES LIGHTING LOAD
TOTAL EST.DEMAND LOAD: 24.0 KVA — 67 A @ V = 208V

PANEL 2D — A.I.C. RATING: 10K

VOLTAGE: 208Y/120V — PHASE: 3 — WIRE: 4WSN — CIRCUITS: 18

MOUNTING: SURFACE — MAIN BRKR: MLO — BREAKER: BOLT ON — MAIN BUS: 100A

CKT	DESCRIPTION	PHASE A	PHASE B	PHASE C	BRKR	WIRE	CKT	DESCRIPTION	PHASE A	PHASE B	PHASE C	BRKR	WIRE
1	MOTORIZED BACKBD (3/4HP)	1.7			1P25	#8	2	BLEACHER MOVER (3/4HP)	1.7			1P25	#12
3	MOTORIZED BACKBD (3/4HP)		1.7		1P25	#10	4	BLEACHER MOVER (3/4HP)		1.7		1P25	#12
5	MOTORIZED BACKBD (3/4HP)			1.7	1P25	#12	6	BLEACHER MOVER (3/4HP)			1.7	1P25	#12
7	MOTORIZED BACKBD (3/4HP)	1.7			1P25	#10	8	SPARE	1.0			1P20	
9	MOTORIZED BACKBD (3/4HP)		1.7		1P25	#10	10	SPARE		1.0		1P20	
11	MOTORIZED BACKBD (3/4HP)			1.7	1P25	#8	12	SPARE			1.0	1P20	
13	L: LIGHTS	0.2			1P20	#12	14	SCOREBOARD	0.5			1P20	#12
15	R: GYM		0.5		1P20	#10	16	SCOREBOARD		0.5		1P20	#12
17	R: GYM			0.7	1P20	#10	18	PFB					
	ADDED TOTALS	3.6	3.9	4.1				ADDED TOTALS	3.2	3.2	2.7		

TOTAL CONNECTED LOAD: 20.7 KVA — R: DENOTES RECEPTACLE LOAD
ESTIMATED DEMAND: 1.0 — L: DENOTES LIGHTING LOAD
TOTAL EST.DEMAND LOAD: 20.7 KVA — 57 A @ V = 208V

PANEL 4A — A.I.C. RATING: 65K

VOLTAGE: 480Y/277V — PHASE: 3 — WIRE: 4WSN — CIRCUITS: 36

MOUNTING: SURFACE — MAIN BRKR: 3P400 — BREAKER: BOLT ON — MAIN BUS: 400A

CKT	DESCRIPTION	PHASE A	PHASE B	PHASE C	BRKR	WIRE	CKT	DESCRIPTION	PHASE A	PHASE B	PHASE C	BRKR	WIRE
1	L: COURT 1A	2.4			1P20	#10	2		3.4				
3	L: COURT 1A		2.4		1P20	#10	4	E: AHU-1		3.4		3P25	#10
5	L: COURT 1B			2.4	1P20	#10	6				3.4		
7	L: COURT 1B	2.4			1P20	#10	8		3.4				
9	L: COURT 2A		2.4		1P20	#10	10	E: AHU-2		3.4		3P25	#10
11	L: COURT 2A			2.4	1P20	#10	12				3.4		
13	L: COURT 2B	2.4			1P20	#10	14		3.4				
15	L: COURT 2B		2.4		1P20	#10	16	E: AHU-3		3.4		3P25	#10
17	SPARE			1.0	1P20		18				3.4		
19	L: PARKING LIGHTS	3.7			1P20	#10	20		3.4				
21	L: PARKING LIGHTS		1.7		1P20	#10	22	E: AHU-4		3.4		3P25	#10
23	L: PARKING LIGHTS			1.7	1P20	#10	24				3.4		
25	L: PERIMETER	1.3			1P20	#10	26						
27	INSTANT HOT WATER HEATER		8.5		1P40	#4*	28	PFB					
29	INSTANT HOT WATER HEATER			8.5	1P40	#4*	30						
31	INSTANT HOT WATER HEATER	8.5			1P40	#4*	32		50.0				
33	PFB						34	PANEL '2A' (150KVA XFRM)		50.0		3P225	#4/0
35	PFB						36				50.0		
	ADDED TOTALS	20.7	17.4	16.0				ADDED TOTALS	63.6	63.6	63.6		

TOTAL CONNECTED LOAD: 244.9 KVA — * UPSIZED FOR VOLTAGE DROP CONSIDERATION
ESTIMATED DEMAND: 1.0 — L: DENOTES LIGHTING LOAD
TOTAL EST.DEMAND LOAD: 244.9 KVA — 295 A @ V = 480V

ECM Inc.
Electrical Engineering Consultants
MAUI OFFICE
130 North Market Street
Wailuku, Maui, Hi. 96793
Phone: (808)242-8070
Fax: (808)244-9539
E-mail: ecm@ecm-maui.com

JERAL M. FUKUDA — LICENSED PROFESSIONAL ENGINEER — No. 10378-E — HAWAII, U.S.A.

APRIL 30, 2018
EXPIRATION DATE

THIS WORK WAS PREPARED BY ME OR UNDER MY SUPERVISION AND CONSTRUCTION OF THIS PROJECT WILL BE UNDER MY OBSERVATION. (SUPERVISION OF CONSTRUCTION AS DEFINED UNDER SECTION 16-82-2 OF CHAPTER 82: RULES OF THE BOARD OF PROFESSIONAL ENGINEERS, ARCHITECTS AND LAND SURVEYORS: STATE OF HAWAII.)

Note: Contractor shall check and verify all dimensions at job before proceeding with work.

REVISIONS

NO	DATE	DESCRIPTION	INI

JOB NO. 2014-81
DATE: 11/01/16
DRAWN BY: RMB
DESIGNED BY: JMF
CHECKED BY: JMF

ELECTRICAL PLANS FOR:
SOUTH MAUI COMMUNITY PARK
KIHEI, MAUI, HI
TMK: (2) 2-2-002:042

SHEET NO.
E-8
11 OF – SHEETS

BID SET

THIS DRAWING IS AN "INSTRUMENT OF SERVICE" BY ECM INC. THIS WORK IS A PART OF AN INTEGRATED PROCESS OF TECHNICAL DESIGN. USE OUTSIDE THIS PROCESS IS INAPPROPRIATE AND TRANSFER OF ITS OBSERVATIONS, CONCLUSIONS, OR METHODOLOGY TO ANY OTHER WORK MAY HAVE SERIOUS CONSEQUENCES.

2014-81
24x36
0 1 2

H:\acad2\2014-81 South Maui Community Park Rec Center\E-8.dwg, 12/15/2016 1:26:14 PM